# APPENDIX B

8724145

# THE UNITED STATES OF AMERICA

## TO ALL TO WHOM THESE PRESENTS SHALL COME:

**UNITED STATES DEPARTMENT OF COMMERCE**

**United States Patent and Trademark Office**

***June 04, 2026***

**THIS IS TO CERTIFY THAT ANNEXED IS A TRUE COPY FROM THE RECORDS OF THIS OFFICE OF THE FILE WRAPPER AND CONTENTS OF:**

**APPLICATION NUMBER:** *15/096,686*
**FILING DATE:** *April 12, 2016*
**PATENT NUMBER:** *9775774*
**ISSUE DATE:** *October 03, 2017*

**Certified by**

DIRECTOR OF THE UNITED STATES PATENT AND TRADEMARK OFFICE

PTO/AIA/15 (03-13)
Approved for use through 01/31/2014. OMB 0651-0032
U.S. Patent and Trademark Office; U.S. DEPARTMENT OF COMMERCE
Under the Paperwork Reduction Act of 1995, no persons are required to respond to a collection of information unless it displays a valid OMB control number.

# UTILITY PATENT APPLICATION TRANSMITTAL

*(Only for new nonprovisional applications under 37 CFR 1.53(b))*

| | |
|---|---|
| *Attorney Docket No.* | NA001KR_US2 |
| *First Named Inventor* | Na |
| *Title* | METHOD, SYSTEM, AND APPARATUS FOR DERMATOLOGICAL TREATMENT |
| *Express Mail Label No.* | via EFSWEB |

## APPLICATION ELEMENTS

*See MPEP chapter 600 concerning utility patent application contents.*

1. [ ] **Fee Transmittal Form** (PTO/SB/17 or equivalent)
2. [X] **Applicant asserts small entity status.** See 37 CFR 1.27.
3. [ ] **Applicant certifies micro entity status.** See 37 CFR 1.29. Applicant must attach form PTO/SB/15A or B or equivalent.
4. [x] **Specification** [*Total Pages* 26 ] Both the claims and abstract must start on a new page *(See MPEP § 608.01(a)) for information on the preferred arrangement)*
5. [x] **Drawing(s)** *(35 U.S.C. 113)* [*Total Sheets* 21 ]
6. **Inventor's Oath or Declaration** [*Total Sheets* 1 ] *(including substitute statements under 37 CFR 1.64 and assignments serving as an oath or declaration under 37 CFR 1.63(e))*
   a. [ ] Newly executed (original or copy)
   b. [x] A copy from a prior application (37 CFR 1.63 (d))
7. [X] **Application Data Sheet** **See Note Below.* See 37 CFR 1.76 (PTO/AIA/14 or equivalent)
8. [ ] **CD-ROM or CD-R** in duplicate, large table or Computer Program *(Appendix)*
   [ ] Landscape Table on CD
9. **Nucleotide and/or Amino Acid Sequence Submission.** (*if applicable, items a. – c. are required*)
   a. [ ] Computer Readable Form (CRF)
   b. Specification Sequence Listing on:
      i. [ ] CD-ROM or CD-R (2 copies); or
      ii. [ ] Paper
   c. [ ] Statements verifying identity of above copies

*ADDRESS TO:*

**Commissioner for Patents**
**P.O. Box 1450**
**Alexandria, VA 22313-1450**

## ACCOMPANYING APPLICATION PAPERS

10. [ ] **Assignment Papers** (cover sheet & document(s))
    Name of Assignee_____
11. [ ] **37 CFR 3.73(c) Statement** [ ] **Power of Attorney** (*when there is an assignee*)
12. [ ] **English Translation Document** (*if applicable*)
13. [ ] **Information Disclosure Statement** (PTO/SB/08 or PTO-1449)
    [ ] Copies of citations attached
14. [x] **Preliminary Amendment – 15 pages**
15. [ ] **Return Receipt Postcard** *(MPEP § 503) (Should be specifically itemized)*
16. [ ] **Certified Copy of Priority Document(s)** *(if foreign priority is claimed)*
17. [ ] **Nonpublication Request** under 35 U.S.C. 122 (b)(2)(B)(i). Applicant must attach form PTO/SB/35 or equivalent.
18. [x] **Other:** Replacement drawings pages (2 pages)

***Note:** (1) Benefit claims under 37 CFR 1.78 and foreign priority claims under 1.55 **must** be included in an Application Data Sheet (ADS).
(2) For applications filed under 35 U.S.C. 111, the application must contain an ADS specifying the applicant if the applicant is an assignee, person to whom the inventor is under an obligation to assign, or person who otherwise shows sufficient proprietary interest in the matter. See 37 CFR 1.46(b).

## 19. CORRESPONDENCE ADDRESS

[X] The address associated with Customer Number: 26338 ***OR*** [ ] Correspondence address below

| | | | | | |
|---|---|---|---|---|---|
| Name | | | | | |
| Address | | | | | |
| City | | State | | Zip Code | |
| Country | | Telephone | | Email | |

| | | | |
|---|---|---|---|
| Signature | /mwresq/ | Date | April 12, 2016 |
| Name (Print/type) | *Merle Richman* | Registration No. (Attorney/Agent) | 38282 |

This collection of information is required by 37 CFR 1.53(b). The information is required to obtain or retain a benefit by the public which is to file (and by the USPTO to process) an application. Confidentiality is governed by 35 U.S.C. 122 and 37 CFR 1.11 and 1.14. This collection is estimated to take 12 minutes to complete, including gathering, preparing, and submitting the completed application form to the USPTO. Time will vary depending upon the individual case. Any comments on the amount of time you require to complete this form and/or suggestions for reducing this burden, should be sent to the Chief Information Officer, U.S. Patent and Trademark Office, U.S. Department of Commerce, P.O. Box 1450, Alexandria, VA 22313-1450. DO NOT SEND FEES OR COMPLETED FORMS TO THIS ADDRESS. **SEND TO: Commissioner for Patents, P.O. Box 1450, Alexandria, VA 22313-1450.**

*If you need assistance in completing the form, call 1-800-PTO-9199 and select option 2.*

# Electronic Patent Application Fee Transmittal

| | |
|---|---|
| **Application Number:** | |
| **Filing Date:** | |
| **Title of Invention:** | METHOD, SYSTEM, AND APPARATUS FOR DERMATOLOGICAL TREATMENT |
| **First Named Inventor/Applicant Name:** | Jongju Na |
| **Filer:** | Merle W. Richman |
| **Attorney Docket Number:** | NA001KR_US2 |

Filed as Small Entity

**Filing Fees for Utility under 35 USC 111(a)**

| Description | Fee Code | Quantity | Amount | Sub-Total in USD($) |
|---|---|---|---|---|
| **Basic Filing:** | | | | |
| Utility filing Fee (Electronic filing) | 4011 | 1 | 70 | 70 |
| Utility Search Fee | 2111 | 1 | 300 | 300 |
| Utility Examination Fee | 2311 | 1 | 360 | 360 |
| **Pages:** | | | | |
| **Claims:** | | | | |
| **Miscellaneous-Filing:** | | | | |
| **Petition:** | | | | |
| **Patent-Appeals-and-Interference:** | | | | |

| Description | Fee Code | Quantity | Amount | Sub-Total in USD($) |
|---|---|---|---|---|
| **Post-Allowance-and-Post-Issuance:** | | | | |
| **Extension-of-Time:** | | | | |
| **Miscellaneous:** | | | | |
| | | | **Total in USD ($)** | **730** |

# Electronic Acknowledgement Receipt

| | |
|---|---|
| **EFS ID:** | 25467432 |
| **Application Number:** | 15096686 |
| **International Application Number:** | |
| **Confirmation Number:** | 2620 |
| **Title of Invention:** | METHOD, SYSTEM, AND APPARATUS FOR DERMATOLOGICAL TREATMENT |
| **First Named Inventor/Applicant Name:** | Jongju Na |
| **Customer Number:** | 26338 |
| **Filer:** | Merle W. Richman |
| **Filer Authorized By:** | |
| **Attorney Docket Number:** | NA001KR_US2 |
| **Receipt Date:** | 12-APR-2016 |
| **Filing Date:** | |
| **Time Stamp:** | 15:04:02 |
| **Application Type:** | Utility under 35 USC 111(a) |

## Payment information:

| | |
|---|---|
| Submitted with Payment | no |

## File Listing:

| Document Number | Document Description | File Name | File Size(Bytes)/ Message Digest | Multi Part /.zip | Pages (if appl.) |
|---|---|---|---|---|---|
| 1 | Application Data Sheet | na001KR_US2-ads.pdf | 1508086<br>c7e760f3b4bf49a789ab9f5cacbcdd32a803def9 | no | 7 |

| | |
|---|---|
| **Warnings:** | |
| **Information:** | |

| | | | | | |
|---|---|---|---|---|---|
| 2 | Drawings-only black and white line drawings | na001kr_us2-drawings.pdf | 3533601<br>9296df9417186d738035255c3deb366ef4e7550e | no | 21 |
| **Warnings:** | | | | | |
| **Information:** | | | | | |
| 3 | Oath or Declaration filed | NA001US1-declaration-executed.pdf | 556333<br>304ecb956ea1df1595372d40566d098116700ff9 | no | 1 |
| **Warnings:** | | | | | |
| **Information:** | | | | | |
| 4 | Specification | na001kr_us2-application.pdf | 165730<br>682bec75ea19e4fac960c192cb2d7098ea509364 | no | 26 |
| **Warnings:** | | | | | |
| **Information:** | | | | | |
| 5 | Preliminary Amendment | na001kr_us2-preliminary-amendment.pdf | 115922<br>fca9523cbd70d2128d87669cbe03e3ac3159b4bc | no | 15 |
| **Warnings:** | | | | | |
| **Information:** | | | | | |
| 6 | Drawings-only black and white line drawings | na001kr_us2_us-replacement-drawings-bw.pdf | 154697<br>b8187c49f0db1dcd8c8e2a69f24d260949615bb5 | no | 2 |
| **Warnings:** | | | | | |
| **Information:** | | | | | |
| 7 | Transmittal of New Application | na001kr_us2-transmittal.pdf | 122130<br>292a2d204f5e1fe5cadb063961252bdd0aaf7089 | no | 1 |
| **Warnings:** | | | | | |
| **Information:** | | | | | |
| 8 | Fee Worksheet (SB06) | fee-info.pdf | 35068<br>6c86e13153b8ccdd7e2279d57c52f78774c9ec07 | no | 2 |
| **Warnings:** | | | | | |
| **Information:** | | | | | |
| | | | **Total Files Size (in bytes):** | 6191567 | |

**This Acknowledgement Receipt evidences receipt on the noted date by the USPTO of the indicated documents, characterized by the applicant, and including page counts, where applicable. It serves as evidence of receipt similar to a Post Card, as described in MPEP 503.**

**New Applications Under 35 U.S.C. 111**

**If a new application is being filed and the application includes the necessary components for a filing date (see 37 CFR 1.53(b)-(d) and MPEP 506), a Filing Receipt (37 CFR 1.54) will be issued in due course and the date shown on this Acknowledgement Receipt will establish the filing date of the application.**

**National Stage of an International Application under 35 U.S.C. 371**

**If a timely submission to enter the national stage of an international application is compliant with the conditions of 35 U.S.C. 371 and other applicable requirements a Form PCT/DO/EO/903 indicating acceptance of the application as a national stage submission under 35 U.S.C. 371 will be issued in addition to the Filing Receipt, in due course.**

**New International Application Filed with the USPTO as a Receiving Office**

**If a new international application is being filed and the international application includes the necessary components for an international filing date (see PCT Article 11 and MPEP 1810), a Notification of the International Application Number and of the International Filing Date (Form PCT/RO/105) will be issued in due course, subject to prescriptions concerning national security, and the date shown on this Acknowledgement Receipt will establish the international filing date of the application.**

PTO/AIA/14 (03-13)
Approved for use through 01/31/2014. OMB 0651-0032
U.S. Patent and Trademark Office; U.S. DEPARTMENT OF COMMERCE
Under the Paperwork Reduction Act of 1995, no persons are required to respond to a collection of information unless it contains a valid OMB control number.

| Application Data Sheet 37 CFR 1.76 | Attorney Docket Number | NA001KR_US2 |
|---|---|---|
| | Application Number | |
| Title of Invention | METHOD, SYSTEM, AND APPARATUS FOR DERMALOGICAL TREATMENT | |

The application data sheet is part of the provisional or nonprovisional application for which it is being submitted. The following form contains the bibliographic data arranged in a format specified by the United States Patent and Trademark Office as outlined in 37 CFR 1.76.
This document may be completed electronically and submitted to the Office in electronic format using the Electronic Filing System (EFS) or the document may be printed and included in a paper filed application.

## Secrecy Order 37 CFR 5.2

☐ Portions or all of the application associated with this Application Data Sheet may fall under a Secrecy Order pursuant to 37 CFR 5.2 (Paper filers only. Applications that fall under Secrecy Order may not be filed electronically.)

## Inventor Information:

**Inventor** 1 — Remove

**Legal Name**

| Prefix | Given Name | Middle Name | Family Name | Suffix |
|---|---|---|---|---|
| Mr | Jongju | | Na | |

**Residence Information (Select One)** US Residency ● Non US Residency Active US Military Service

| City | Songpa-Gu | Country of Residence i | KR |
|---|---|---|---|

**Mailing Address of Inventor:**

| | |
|---|---|
| **Address 1** | 17145 Von Karman Ave. |
| **Address 2** | Scarlet RF Inc |
| **City** | Irvine |
| **State/Province** | |
| **Postal Code** | 92614 |
| **Country** i | US |

All Inventors Must Be Listed - Additional Inventor Information blocks may be generated within this form by selecting the **Add** button. Add

## Correspondence Information:

**Enter either Customer Number or complete the Correspondence Information section below.**
**For further information see 37 CFR 1.33(a).**

☐ **An Address is being provided for the correspondence Information of this application.**

| | | | |
|---|---|---|---|
| **Customer Number** | 26338 | | |
| **Email Address** | patent@san.rr.com | Add Email | Remove Email |

## Application Information:

| | | | |
|---|---|---|---|
| **Title of the Invention** | METHOD, SYSTEM, AND APPARATUS FOR DERMALOGICAL TREATMENT | | |
| **Attorney Docket Number** | NA001KR_US2 | **Small Entity Status Claimed** | ☒ |
| **Application Type** | Nonprovisional | | |
| **Subject Matter** | Utility | | |
| **Total Number of Drawing Sheets (if any)** | 21 | **Suggested Figure for Publication (if any)** | 9A |

PTO/AIA/14 (03-13)
Approved for use through 01/31/2014. OMB 0651-0032
U.S. Patent and Trademark Office; U.S. DEPARTMENT OF COMMERCE
Under the Paperwork Reduction Act of 1995, no persons are required to respond to a collection of information unless it contains a valid OMB control number.

| Application Data Sheet 37 CFR 1.76 | Attorney Docket Number | NA001KR_US2 |
|---|---|---|
| | Application Number | |
| Title of Invention | METHOD, SYSTEM, AND APPARATUS FOR DERMALOGICAL TREATMENT | |

## Publication Information:

☐ Request Early Publication (Fee required at time of Request 37 CFR 1.219)

☐ **Request Not to Publish.** I hereby request that the attached application not be published under 35 U.S.C. 122(b) and certify that the invention disclosed in the attached application **has not and will not** be the subject of an application filed in another country, or under a multilateral international agreement, that requires publication at eighteen months after filing.

## Representative Information:

Representative information should be provided for all practitioners having a power of attorney in the application. Providing this information in the Application Data Sheet does not constitute a power of attorney in the application (see 37 CFR 1.32).
Either enter Customer Number or complete the Representative Name section below. If both sections are completed the customer Number will be used for the Representative Information during processing.

| Please Select One: | ● Customer Number | US Patent Practitioner | ○ Limited Recognition (37 CFR 11.9) |
|---|---|---|---|
| Customer Number | 26338 | | |

## Domestic Benefit/National Stage Information:

This section allows for the applicant to either claim benefit under 35 U.S.C. 119(e), 120, 121, or 365(c) or indicate National Stage entry from a PCT application. Providing this information in the application data sheet constitutes the specific reference required by 35 U.S.C. 119(e) or 120, and 37 CFR 1.78.

| Prior Application Status | Pending | | Remove |
|---|---|---|---|
| Application Number | Continuity Type | Prior Application Number | Filing Date (YYYY-MM-DD) |
| | Continuation of | 13825083 | 2013-03-19 |
| Prior Application Status | Expired | | Remove |
| Application Number | Continuity Type | Prior Application Number | Filing Date (YYYY-MM-DD) |
| 13825083 | a 371 of international | PCTKR2012001335 | 2012-02-22 |
| Prior Application Status | Expired | | Remove |
| Application Number | Continuity Type | Prior Application Number | Filing Date (YYYY-MM-DD) |
| PCTKR2012001335 | non provisional of | 61449080 | 2011-03-03 |
| Prior Application Status | Patented | | Remove |

| Application Number | Continuity Type | Prior Application Number | Filing Date (YYYY-MM-DD) | Patent Number | Issue Date (YYYY-MM-DD) |
|---|---|---|---|---|---|
| PCTKR2012001333 | Continuation of | 13060274 | 2011-02-22 | 8979912 | 2015-03-17 |

| Prior Application Status | Expired | | Remove |
|---|---|---|---|
| Application Number | Continuity Type | Prior Application Number | Filing Date (YYYY-MM-DD) |
| 13060274 | a 371 of international | PCTUS2008074131 | 2008-08-22 |

PTO/AIA/14 (03-13)
Approved for use through 01/31/2014. OMB 0651-0032
U.S. Patent and Trademark Office; U.S. DEPARTMENT OF COMMERCE
Under the Paperwork Reduction Act of 1995, no persons are required to respond to a collection of information unless it contains a valid OMB control number.

| Application Data Sheet 37 CFR 1.76 | Attorney Docket Number | NA001KR_US2 |
|---|---|---|
| | Application Number | |
| Title of Invention | METHOD, SYSTEM, AND APPARATUS FOR DERMALOGICAL TREATMENT | |

Additional Domestic Benefit/National Stage Data may be generated within this form by selecting the **Add** button. Add

## Foreign Priority Information:

This section allows for the applicant to claim priority to a foreign application. Providing this information in the application data sheet constitutes the claim for priority as required by 35 U.S.C. 119(b) and 37 CFR 1.55(d). When priority is claimed to a foreign application that is eligible for retrieval under the priority document exchange program (PDX)[i] the information will be used by the Office to automatically attempt retrieval pursuant to 37 CFR 1.55(h)(1) and (2). Under the PDX program, applicant bears the ultimate responsibility for ensuring that a copy of the foreign application is received by the Office from the participating foreign intellectual property office, or a certified copy of the foreign priority application is filed, within the time period specified in 37 CFR 1.55(g)(1).

Remove

| Application Number | Country[i] | Filing Date (YYYY-MM-DD) | Access Code[i] (if applicable) |
|---|---|---|---|
| 10-2008-0076993 | KR | 2008-08-06 | |

Additional Foreign Priority Data may be generated within this form by selecting the **Add** button. Add

## Statement under 37 CFR 1.55 or 1.78 for AIA (First Inventor to File) Transition Applications

X This application (1) claims priority to or the benefit of an application filed before March 16, 2013 and (2) also contains, or contained at any time, a claim to a claimed invention that has an effective filing date on or after March 16, 2013.

## Authorization to Permit Access:

X Authorization to Permit Access to the Instant Application by the Participating Offices

PTO/AIA/14 (03-13)
Approved for use through 01/31/2014. OMB 0651-0032
U.S. Patent and Trademark Office; U.S. DEPARTMENT OF COMMERCE
Under the Paperwork Reduction Act of 1995, no persons are required to respond to a collection of information unless it contains a valid OMB control number.

| Application Data Sheet 37 CFR 1.76 | Attorney Docket Number | NA001KR_US2 |
|---|---|---|
| | Application Number | |
| Title of Invention | METHOD, SYSTEM, AND APPARATUS FOR DERMALOGICAL TREATMENT | |

If checked, the undersigned hereby grants the USPTO authority to provide the European Patent Office (EPO), the Japan Patent Office (JPO), the Korean Intellectual Property Office (KIPO), the World Intellectual Property Office (WIPO), and any other intellectual property offices in which a foreign application claiming priority to the instant patent application is filed access to the instant patent application. See 37 CFR 1.14(c) and (h). This box should not be checked if the applicant does not wish the EPO, JPO, KIPO, WIPO, or other intellectual property office in which a foreign application claiming priority to the instant patent application is filed to have access to the instant patent application.

In accordance with 37 CFR 1.14(h)(3), access will be provided to a copy of the instant patent application with respect to: 1) the instant patent application-as-filed; 2) any foreign application to which the instant patent application claims priority under 35 U.S.C. 119(a)-(d) if a copy of the foreign application that satisfies the certified copy requirement of 37 CFR 1.55 has been filed in the instant patent application; and 3) any U.S. application-as-filed from which benefit is sought in the instant patent application.

In accordance with 37 CFR 1.14(c), access may be provided to information concerning the date o f filing this Authorization.

## Applicant Information:

Providing assignment information in this section does not substitute for compliance with any requirement of part 3 of Title 37 of CFR to have an assignment recorded by the Office.

**Applicant 1** Remove

If the applicant is the inventor (or the remaining joint inventor or inventors under 37 CFR 1.45), this section should not be completed. The information to be provided in this section is the name and address of the legal representative who is the applicant under 37 CFR 1.43; or the name and address of the assignee, person to whom the inventor is under an obligation to assign the invention, or person who otherwise shows sufficient proprietary interest in the matter who is the applicant under 37 CFR 1.46. If the applicant is an applicant under 37 CFR 1.46 (assignee, person to whom the inventor is obligated to assign, or person who otherwise shows sufficient proprietary interest) together with one or more joint inventors, then the joint inventor or inventors who are also the applicant should be identified in this section.

Clear

| Assignee | Legal Representative under 35 U.S.C. 117 | Joint Inventor |
|---|---|---|
| Person to whom the inventor is obligated to assign. | Person who shows sufficient proprietary interest | |

If applicant is the legal representative, indicate the authority to file the patent application, the inventor is:

Name of the Deceased or Legally Incapacitated Inventor :

If the Applicant is an Organization check here. ☐

| Prefix | **Given Name** | Middle Name | **Family Name** | Suffix |
|---|---|---|---|---|
| | | | | |

PTO/AIA/14 (03-13)
Approved for use through 01/31/2014. OMB 0651-0032
U.S. Patent and Trademark Office; U.S. DEPARTMENT OF COMMERCE
Under the Paperwork Reduction Act of 1995, no persons are required to respond to a collection of information unless it contains a valid OMB control number.

| **Application Data Sheet 37 CFR 1.76** | Attorney Docket Number | NA001KR_US2 |
|---|---|---|
| | Application Number | |
| Title of Invention | METHOD, SYSTEM, AND APPARATUS FOR DERMALOGICAL TREATMENT | |

| **Mailing Address Information For Applicant:** | | | |
|---|---|---|---|
| **Address 1** | | | |
| Address 2 | | | |
| **City** | | **State/Province** | |
| **Country** i | | Postal Code | |
| Phone Number | | Fax Number | |
| Email Address | | | |

Additional Applicant Data may be generated within this form by selecting the Add button. Add

## Non-Applicant Assignee Information:

Providing assignment information in this section does not subsitute for compliance with any requirement of part 3 of Title 37 of CFR to have an assignment recorded by the Office.

**Assignee** 1

Complete this section only if non-applicant assignee information is desired to be included on the patent application publication in accordance with 37 CFR 1.215(b). Do not include in this section an applicant under 37 CFR 1.46 (assignee, person to whom the inventor is obligated to assign, or person who otherwise shows sufficient proprietary interest), as the patent application publication will include the name of the applicant(s).

Remove

If the Assignee is an Organization check here. ☐

| Prefix | **Given Name** | Middle Name | **Family Name** | Suffix |
|---|---|---|---|---|
| | | | | |

| **Mailing Address Information For Non-Applicant Assignee:** | | | |
|---|---|---|---|
| **Address 1** | | | |
| Address 2 | | | |
| **City** | | **State/Province** | |
| **Country** i | | Postal Code | |
| Phone Number | | Fax Number | |
| Email Address | | | |

Additional Assignee Data may be generated within this form by selecting the Add button. Add

PTO/AIA/14 (03-13)
Approved for use through 01/31/2014. OMB 0651-0032
U.S. Patent and Trademark Office; U.S. DEPARTMENT OF COMMERCE
Under the Paperwork Reduction Act of 1995, no persons are required to respond to a collection of information unless it contains a valid OMB control number.

| **Application Data Sheet 37 CFR 1.76** | Attorney Docket Number | NA001KR_US2 |
|---|---|---|
| | Application Number | |
| Title of Invention | METHOD, SYSTEM, AND APPARATUS FOR DERMALOGICAL TREATMENT | |

## Signature:

Remove

NOTE: This form must be signed in accordance with 37 CFR 1.33. See 37 CFR 1.4 for signature requirements and certifications.

| **Signature** | /mwresq/ | | | Date (YYYY-MM-DD) | 2016-04-12 |
|---|---|---|---|---|---|
| First Name | Merle | Last Name | Richman | Registration Number | 38282 |

Additional Signature may be generated within this form by selecting the Add button. Add

This collection of information is required by 37 CFR 1.76. The information is required to obtain or retain a benefit by the public which is to file (and by the USPTO to process) an application. Confidentiality is governed by 35 U.S.C. 122 and 37 CFR 1.14. This collection is estimated to take 23 minutes to complete, including gathering, preparing, and submitting the completed application data sheet form to the USPTO. Time will vary depending upon the individual case. Any comments on the amount of time you require to complete this form and/or suggestions for reducing this burden, should be sent to the Chief Information Officer, U.S. Patent and Trademark Office, U.S. Department of Commerce, P.O. Box 1450, Alexandria, VA 22313-1450. DO NOT SEND FEES OR COMPLETED FORMS TO THIS ADDRESS. **SEND TO: Commissioner for Patents, P.O. Box 1450, Alexandria, VA 22313-1450.**

# Privacy Act Statement

The Privacy Act of 1974 (P.L. 93-579) requires that you be given certain information in connection with your submission of the attached form related to a patent application or patent. Accordingly, pursuant to the requirements of the Act, please be advised that: (1) the general authority for the collection of this information is 35 U.S.C. 2(b)(2); (2) furnishing of the information solicited is voluntary; and (3) the principal purpose for which the information is used by the U.S. Patent and Trademark Office is to process and/or examine your submission related to a patent application or patent. If you do not furnish the requested information, the U.S. Patent and Trademark Office may not be able to process and/or examine your submission, which may result in termination of proceedings or abandonment of the application or expiration of the patent.

The information provided by you in this form will be subject to the following routine uses:

1. The information on this form will be treated confidentially to the extent allowed under the Freedom of Information Act (5 U.S.C. 552) and the Privacy Act (5 U.S.C. 552a). Records from this system of records may be disclosed to the Department of Justice to determine whether the Freedom of Information Act requires disclosure of these records.

2. A record from this system of records may be disclosed, as a routine use, in the course of presenting evidence to a court, magistrate, or administrative tribunal, including disclosures to opposing counsel in the course of settlement negotiations.

3. A record in this system of records may be disclosed, as a routine use, to a Member of Congress submitting a request involving an individual, to whom the record pertains, when the individual has requested assistance from the Member with respect to the subject matter of the record.

4. A record in this system of records may be disclosed, as a routine use, to a contractor of the Agency having need for the information in order to perform a contract. Recipients of information shall be required to comply with the requirements of the Privacy Act of 1974, as amended, pursuant to 5 U.S.C. 552a(m).

5. A record related to an International Application filed under the Patent Cooperation Treaty in this system of records may be disclosed, as a routine use, to the International Bureau of the World Intellectual Property Organization, pursuant to the Patent Co o p eration Treaty.

6. A record in this system of records may be disclosed, as a routine use, to another federal agency for purposes of National Security review (35 U.S.C. 181) and for review pursuant to the Atomic Energy Act (42 U.S.C. 218(c)).

7. A record from this system of records may be disclosed, as a routine use, to the Administrator, General Services, or his/her designee, during an inspection of records conducted by GSA as part of that agency's responsibility to recommend improvements in records management practices and programs, under authority of 44 U.S.C. 2904 and 2906. Such disclosure shall be made in accordance with the GSA regulations governing inspection of records for this purpose, and any other relevant (i.e., GSA or Commerce) directive. Such disclosure shall not be used to make determinations about individuals.

8. A record from this system of records may be disclosed, as a routine use, to the public after either publication of the application pursuant to 35 U.S.C. 122(b) or issuance of a patent pursuant to 35 U.S.C. 151. Further, a record may be disclosed, subject to the limitations of 37 CFR 1.14, as a routine use, to the public if the record was filed in an application which became abandoned or in which the proceedings were terminated and which application is referenced by either a published application, an application open to public inspections or an issued patent.

9. A record from this system of records may be disclosed, as a routine use, to a Federal, State, or local law enforcement agency, if the USPTO becomes aware of a violation or potential violation of law or regulation.

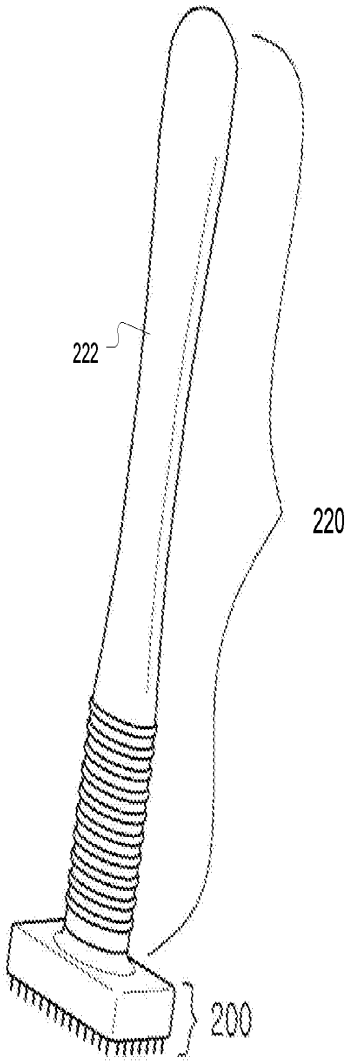


FIGURE 1A

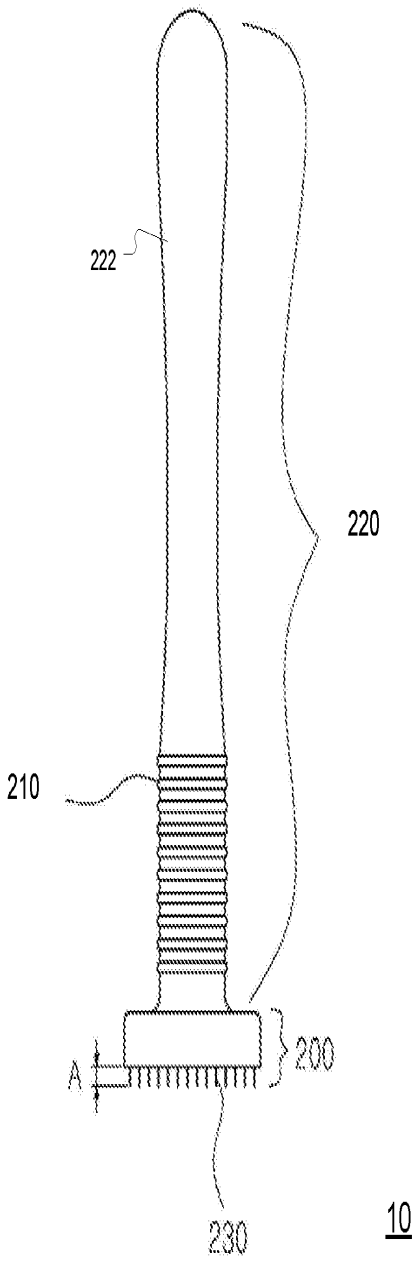


FIGURE 1B

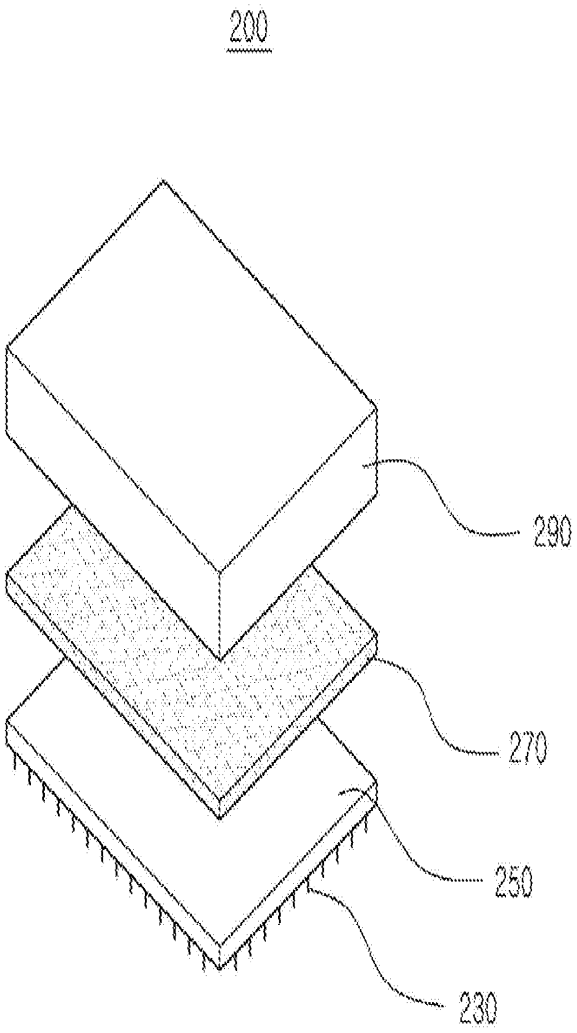


FIGURE 1C

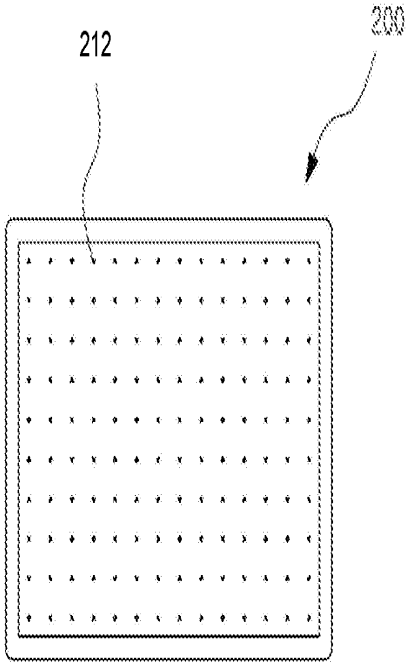


FIGURE 1D

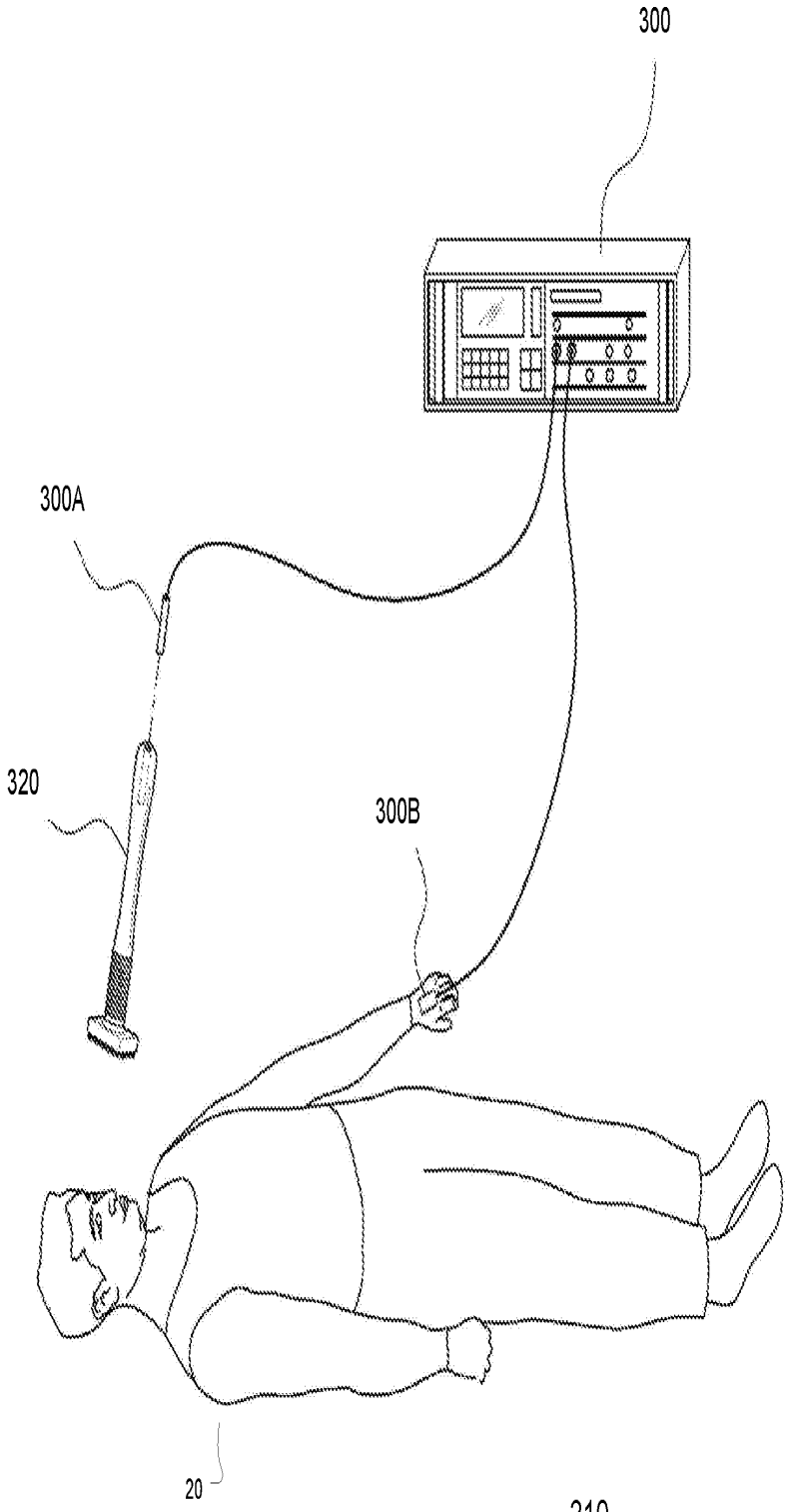


FIGURE 2A

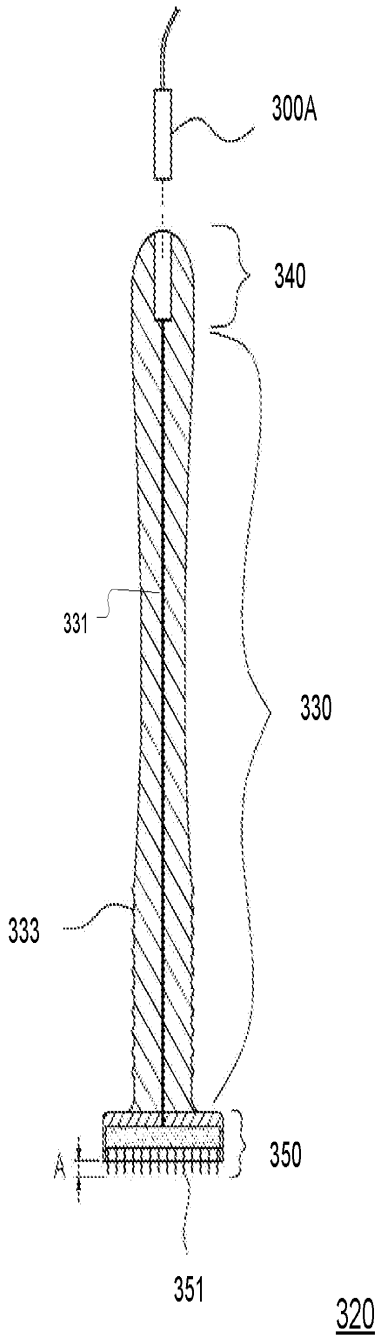


FIGURE 2B

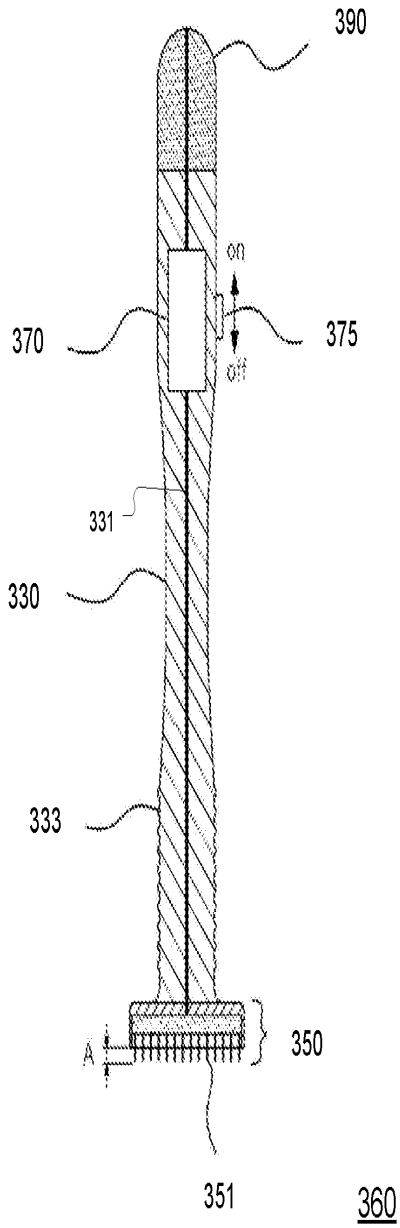


FIGURE 2C

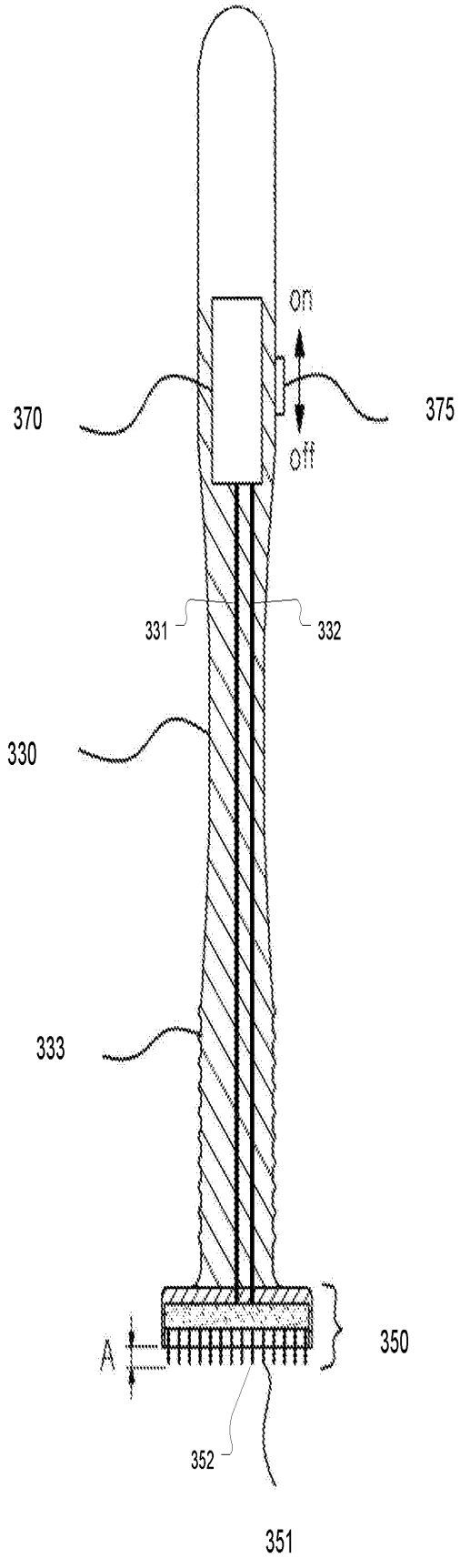


FIGURE 2D

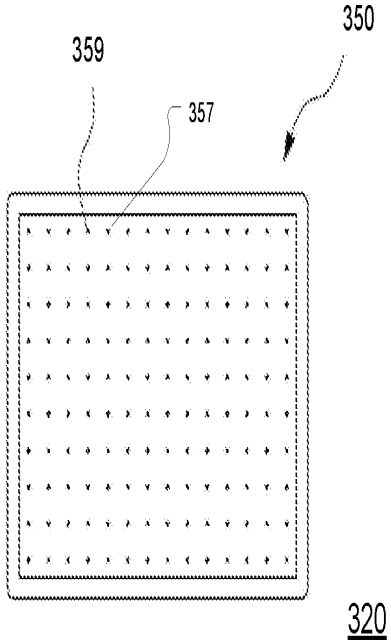


FIGURE 2E

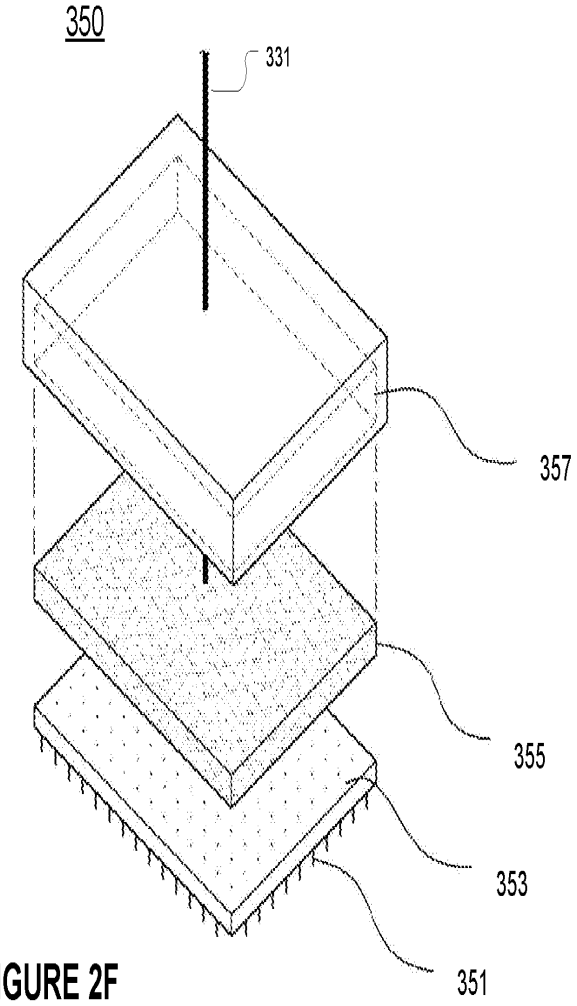


FIGURE 2F

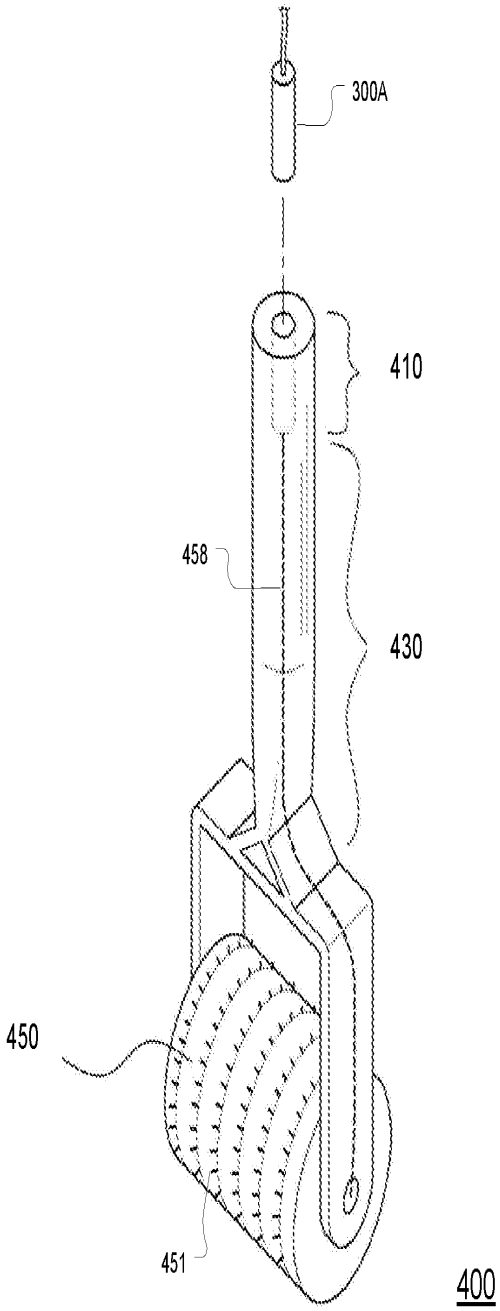


FIGURE 3A

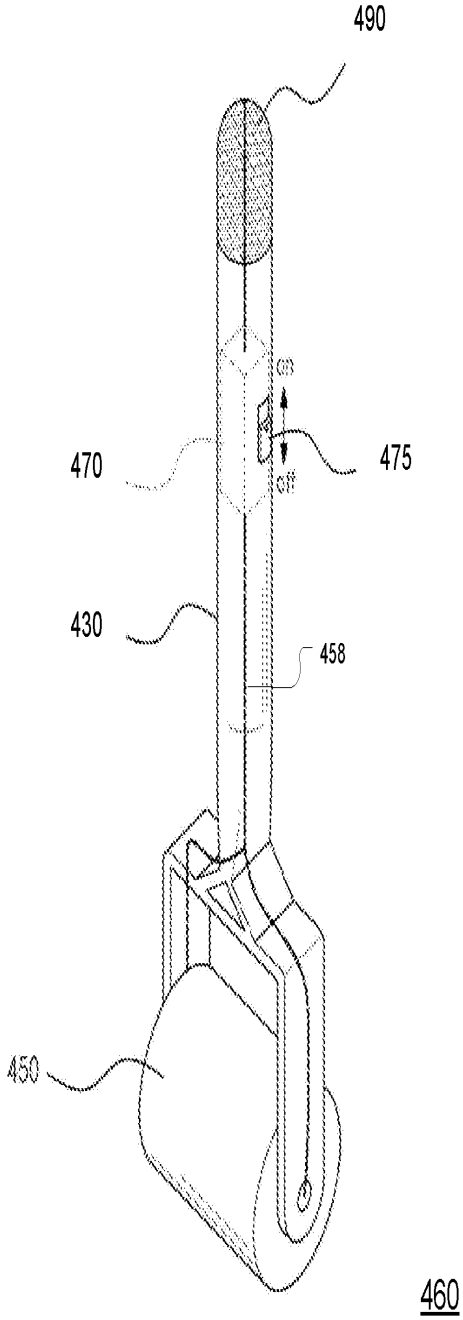


FIGURE 3B

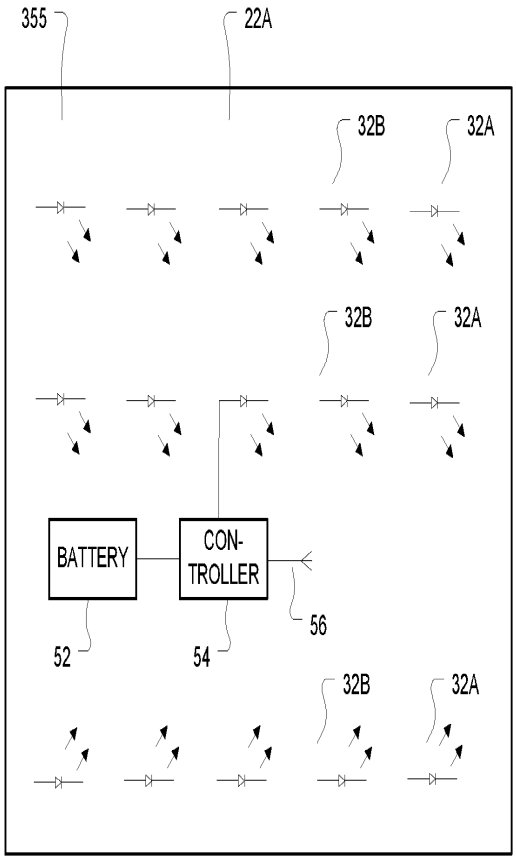


FIGURE 4A 520

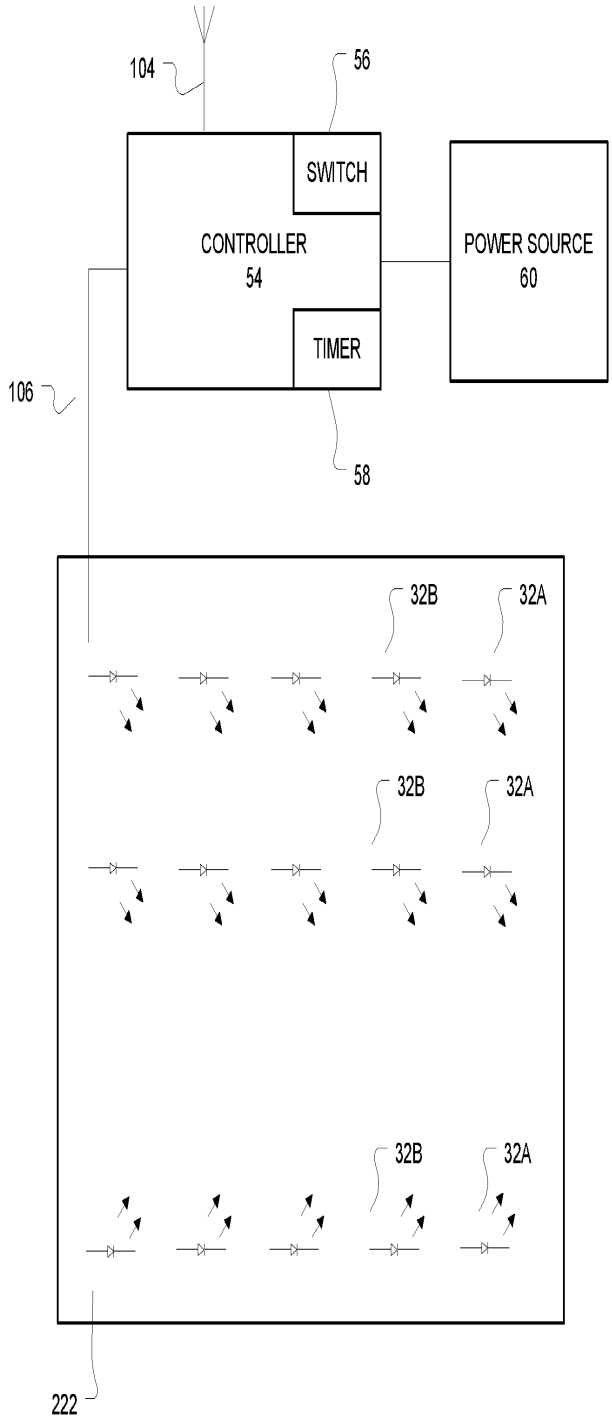


FIGURE 4B 510

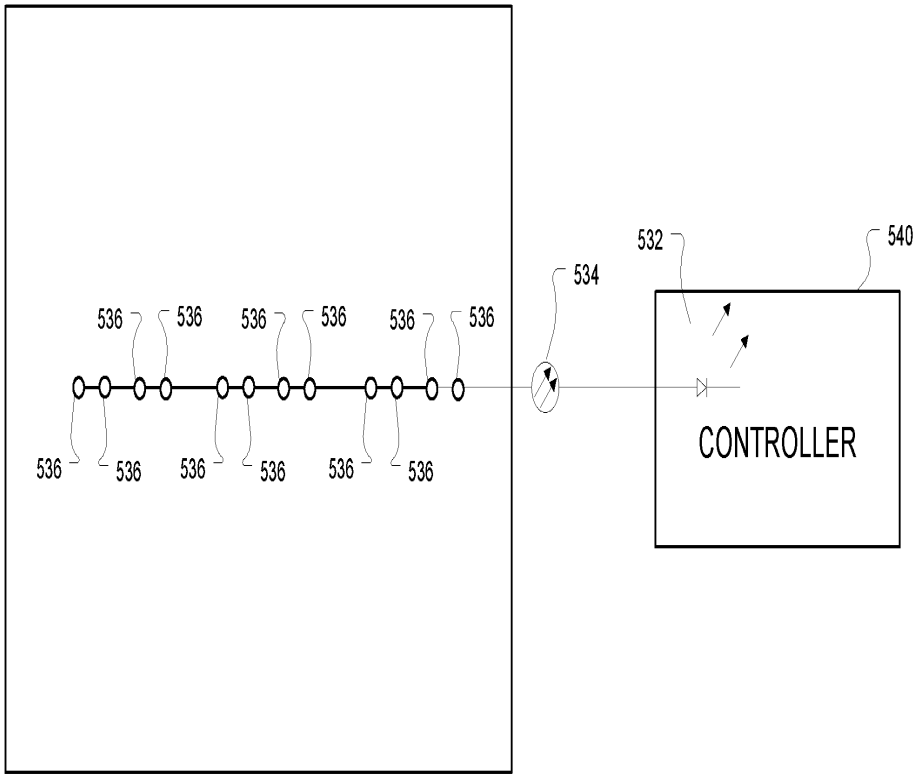
532
540
534
536
536
536
536
536
536
536
536
536
536
536
536
CONTROLLER
530

FIGURE 4C

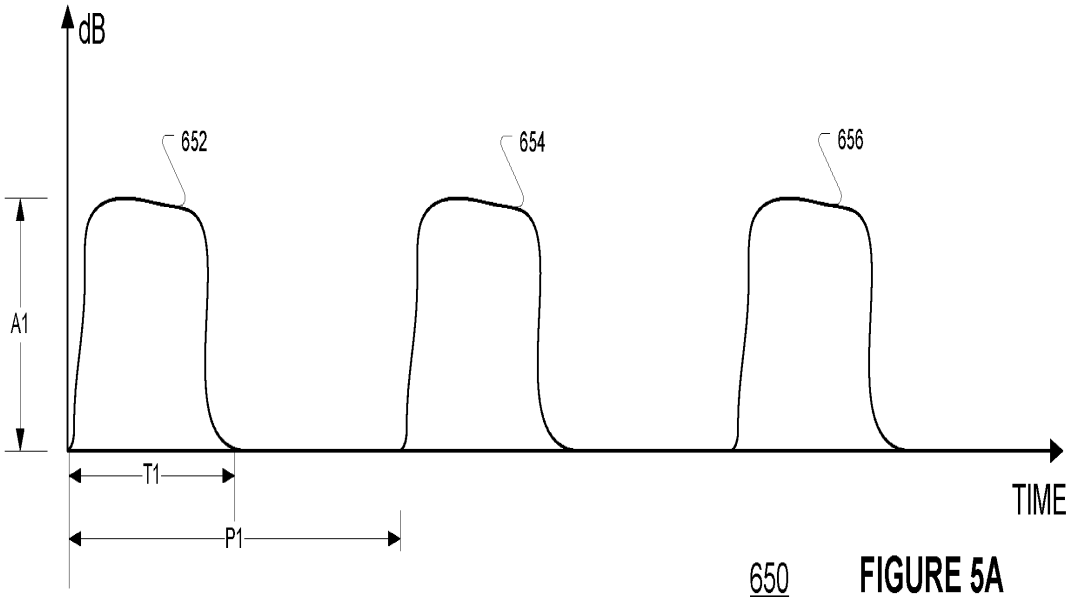


650 FIGURE 5A

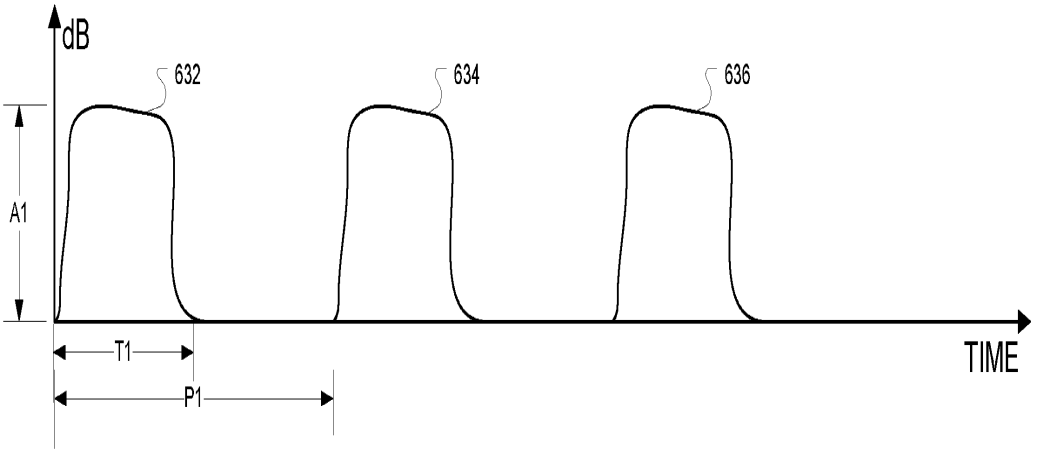


630

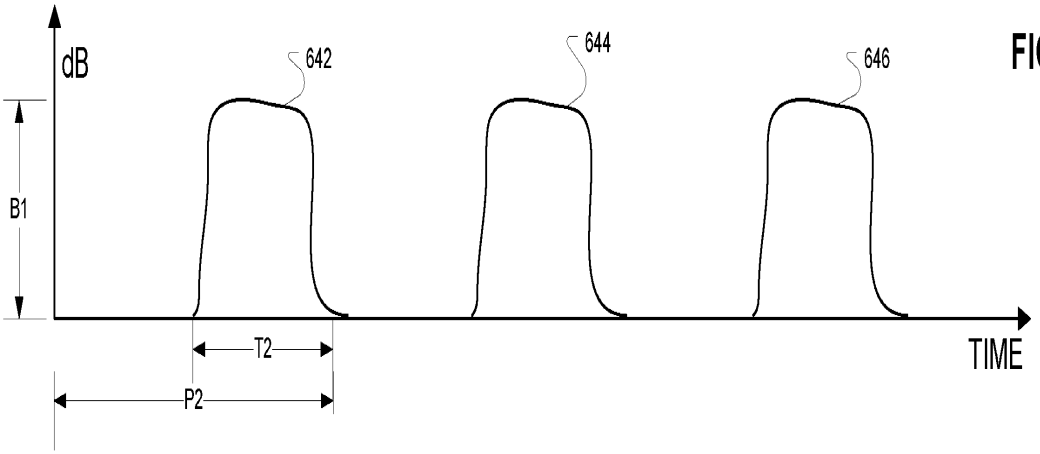


640

FIGURE 5B

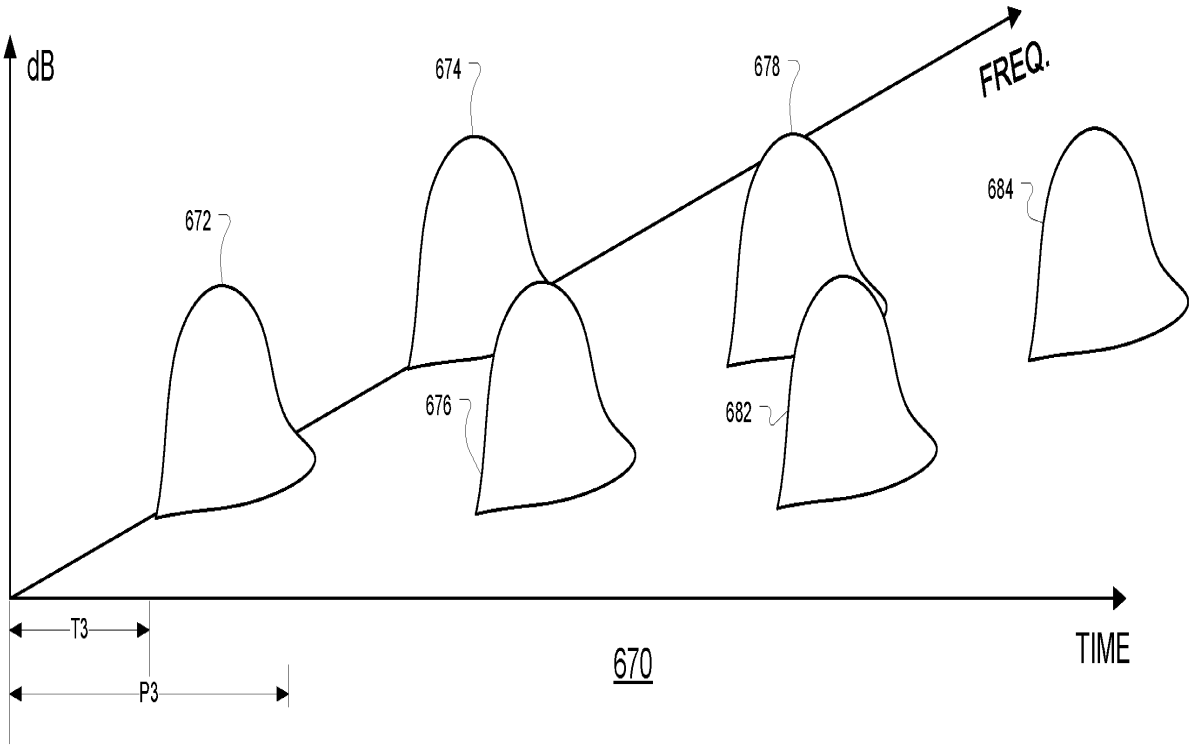


FIGURE 6

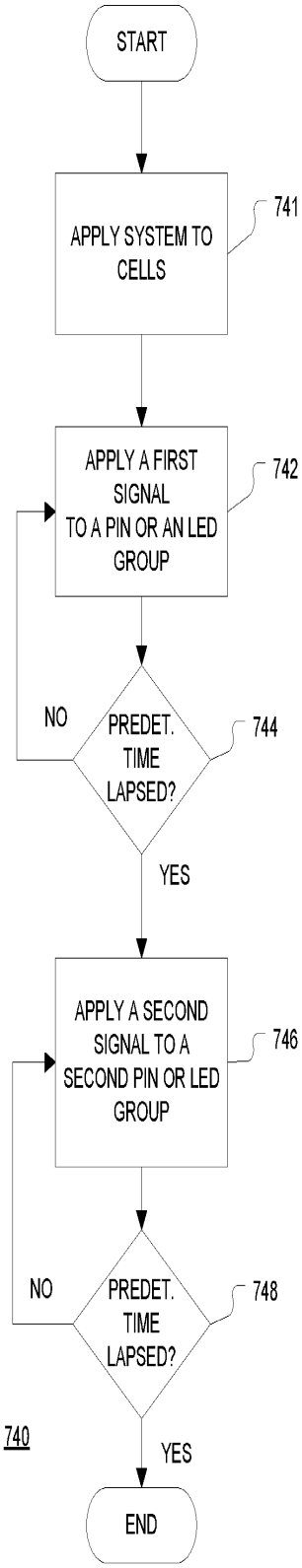


FIGURE 7A

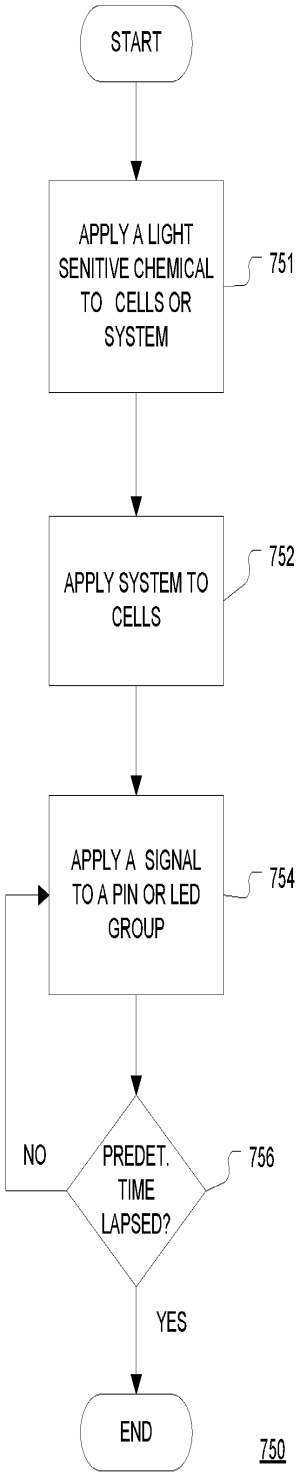


FIGURE 7B

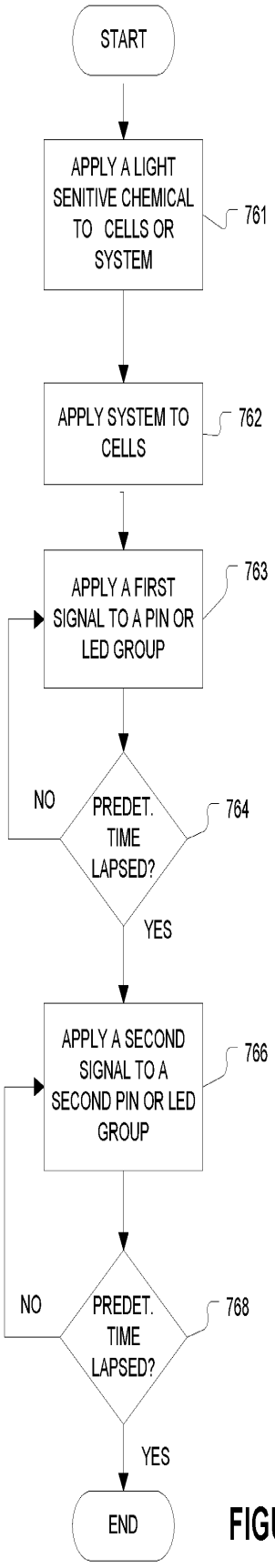


FIGURE 7C

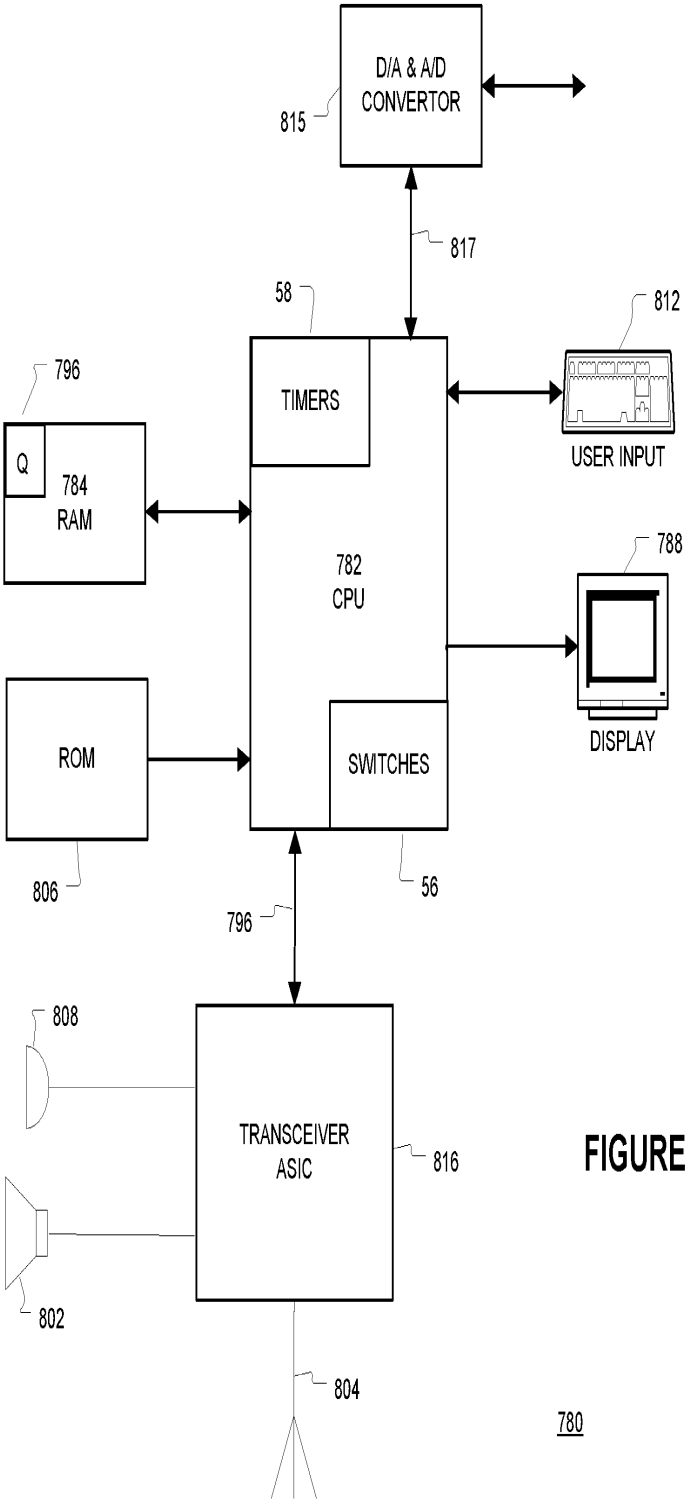
D/A & A/D
CONVERTOR
815
817
58
812
796
TIMERS
USER INPUT
Q
784
RAM
782
CPU
788
ROM
SWITCHES
DISPLAY
806
56
796
808
TRANSCEIVER
ASIC
816
802
804
780

FIGURE 8

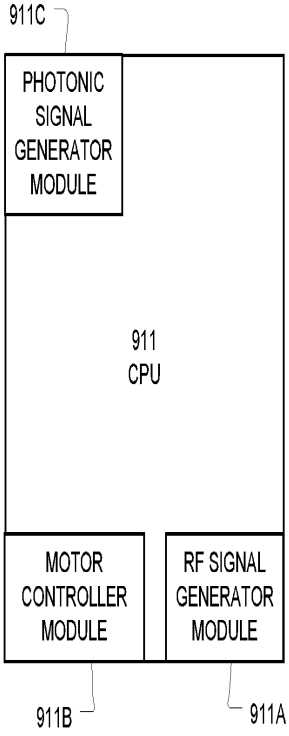


FIGURE 9B

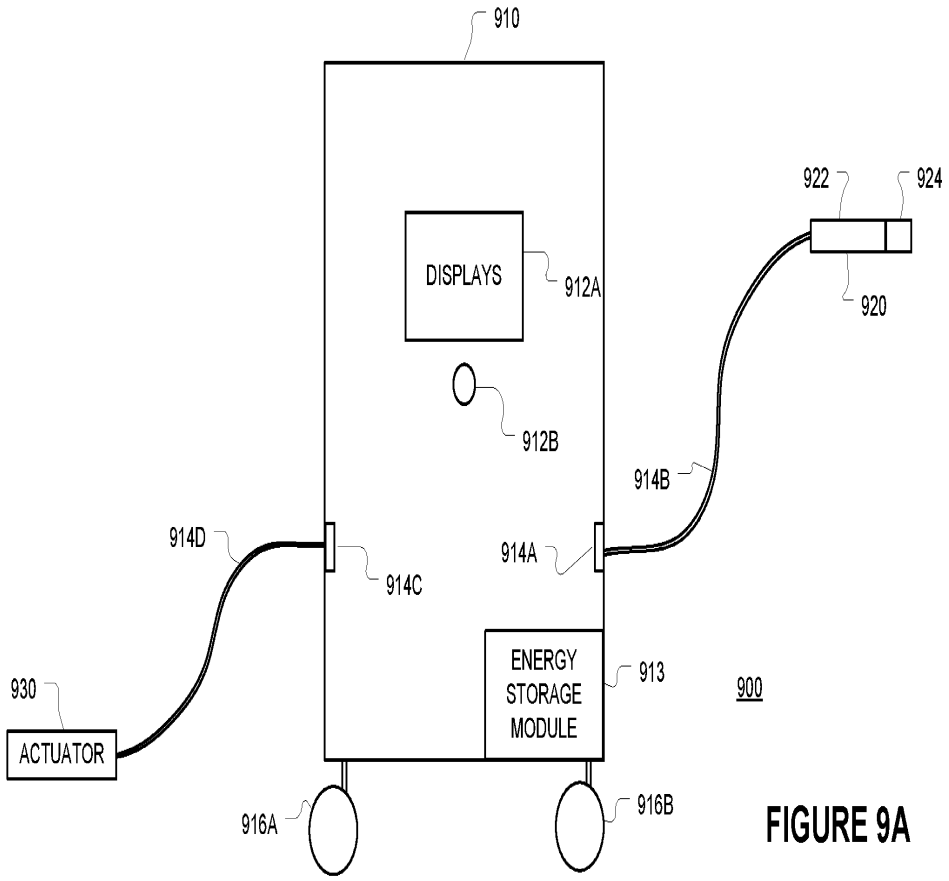


FIGURE 9A

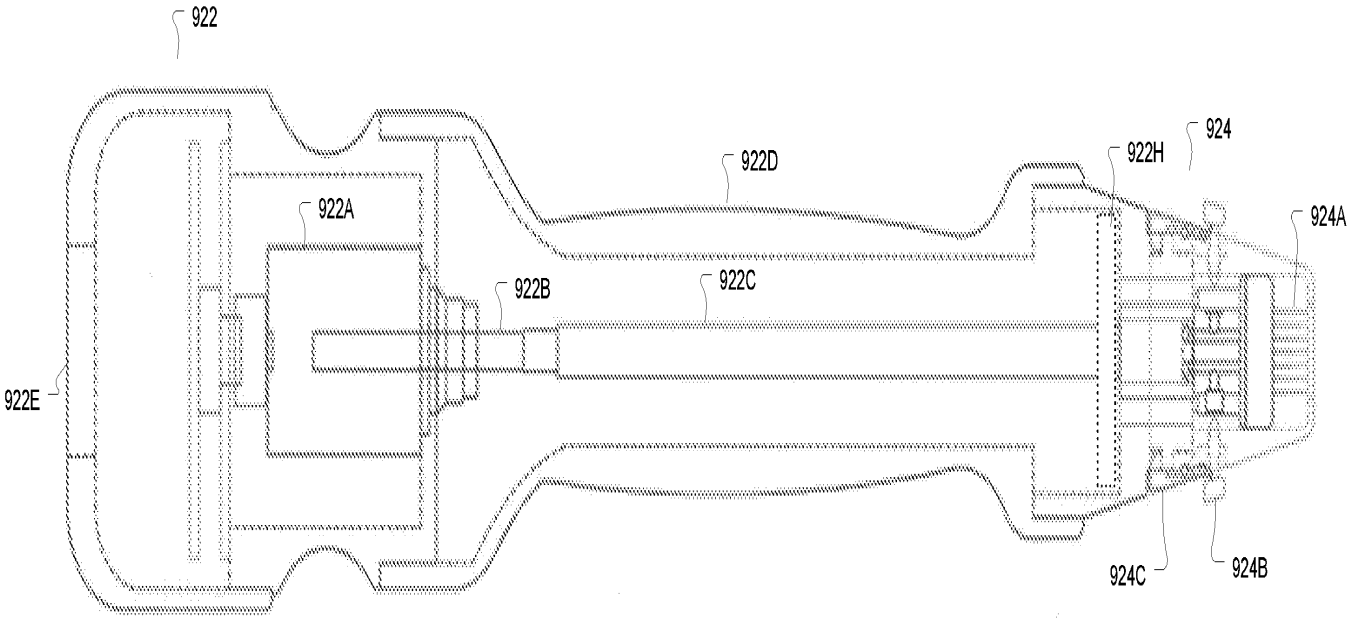


920

FIGURE 9C

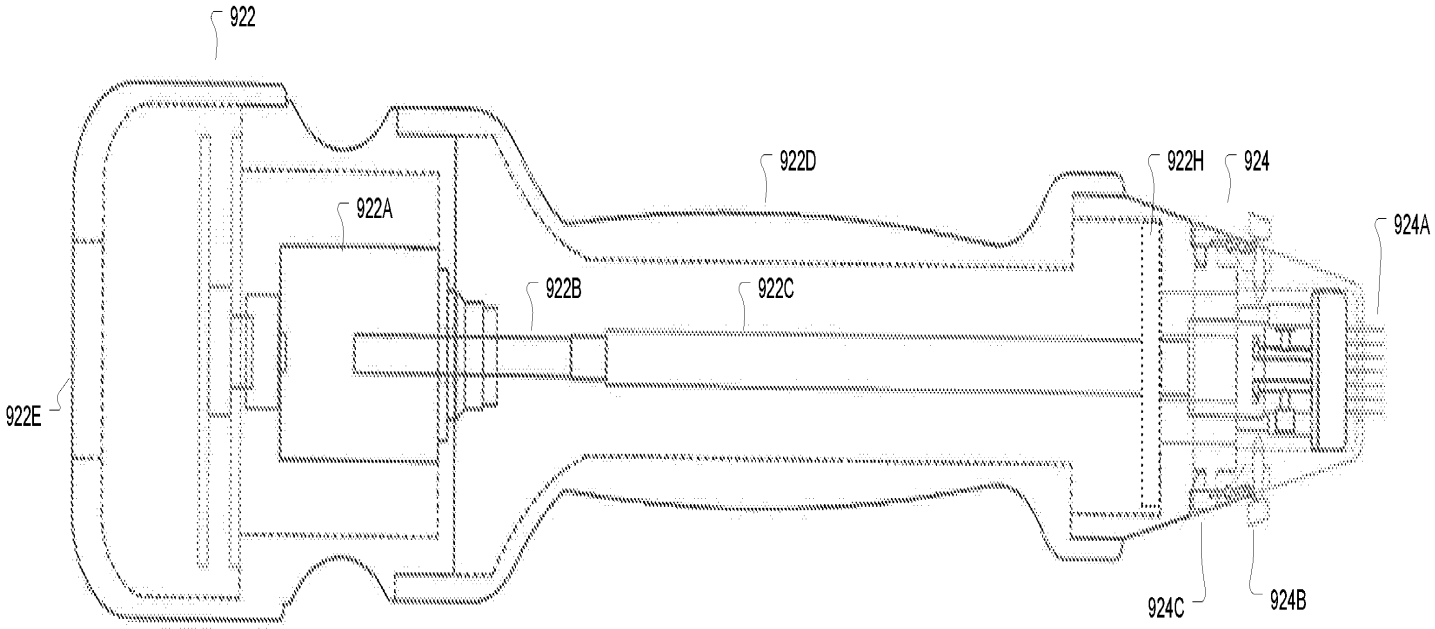


920

FIGURE 9D

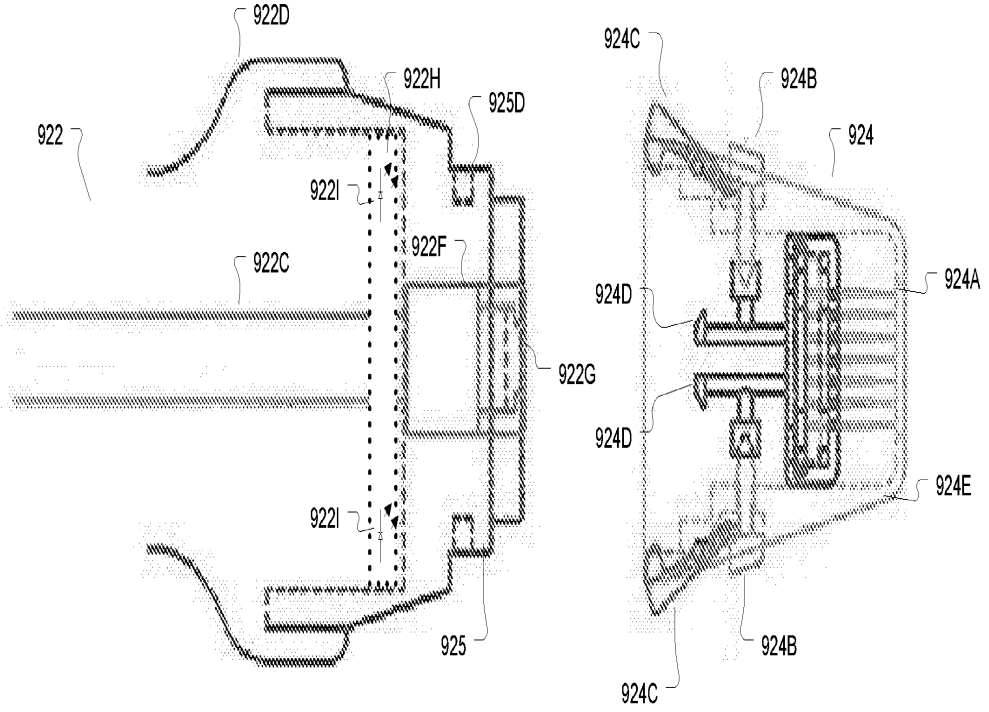


FIGURE 10A

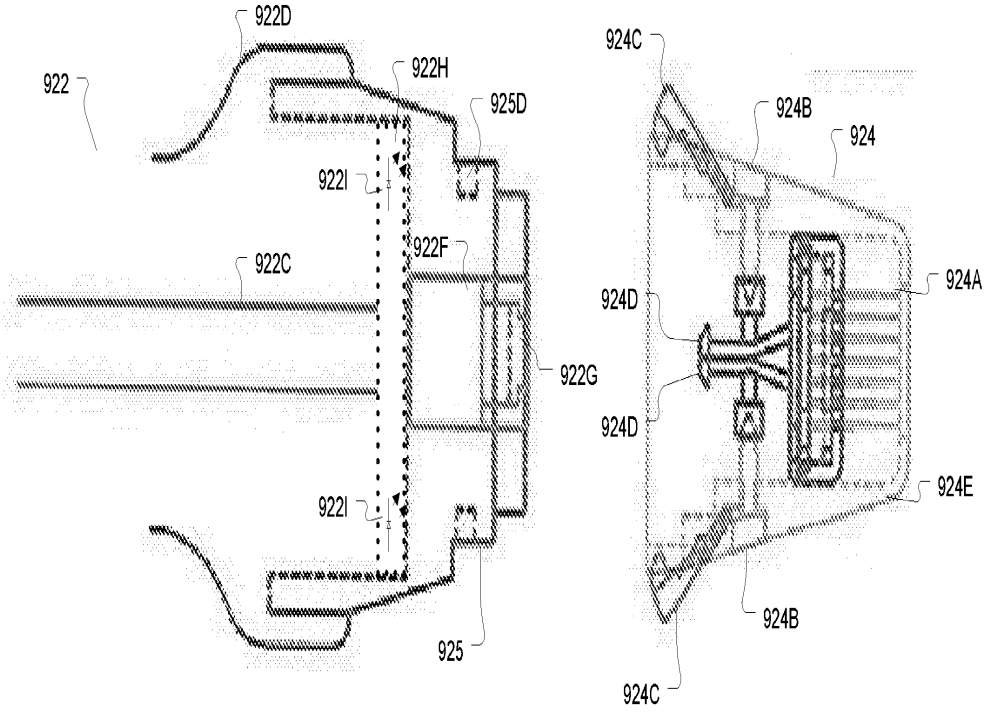


FIGURE 10B

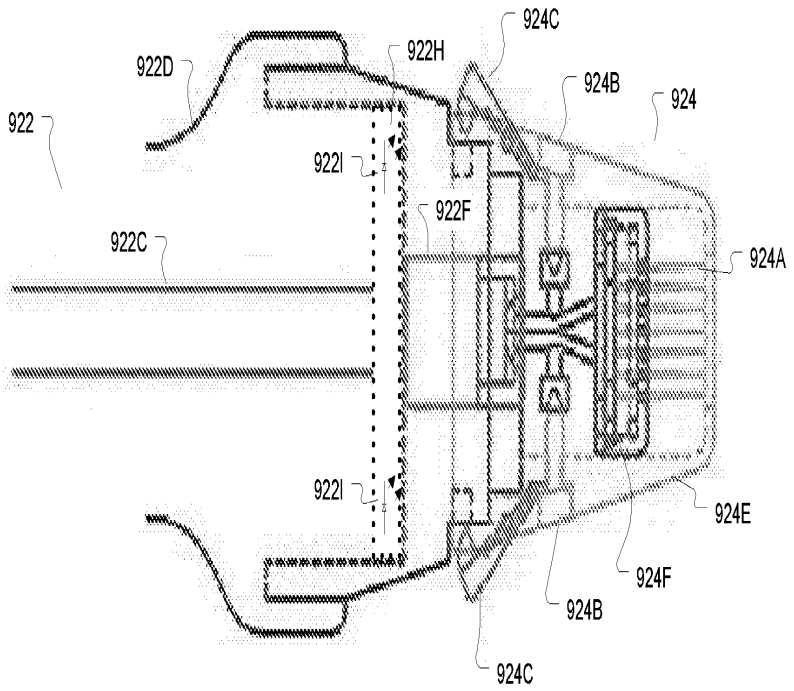


FIGURE 10C

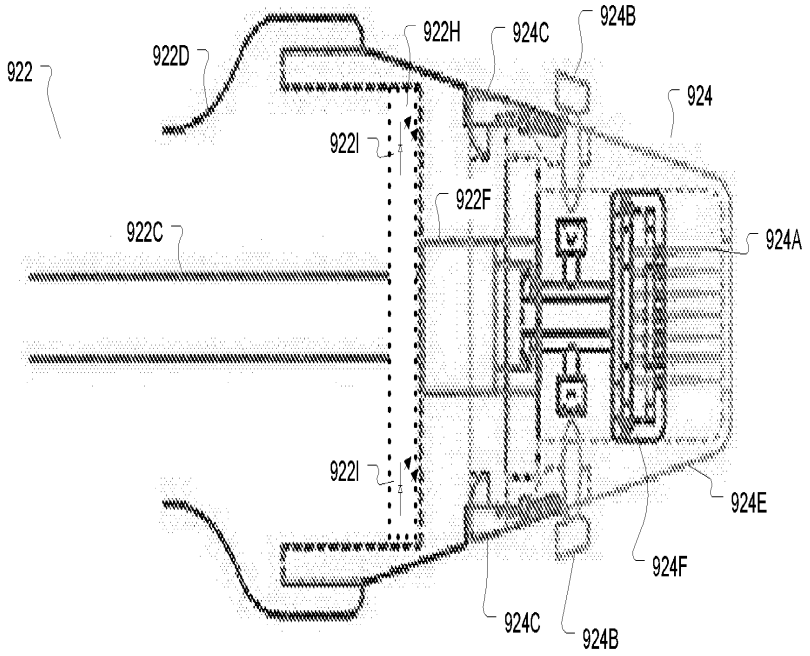


FIGURE 10D

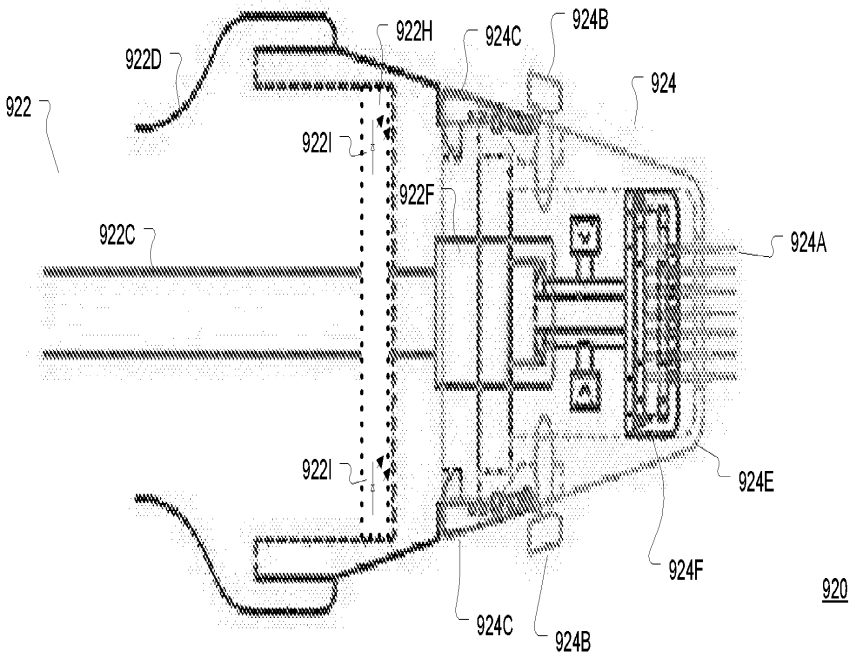


FIGURE 10E

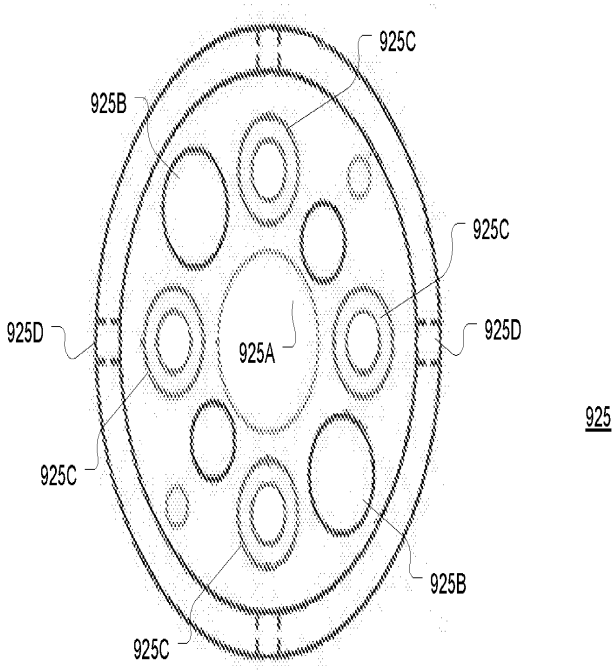


FIGURE 10F

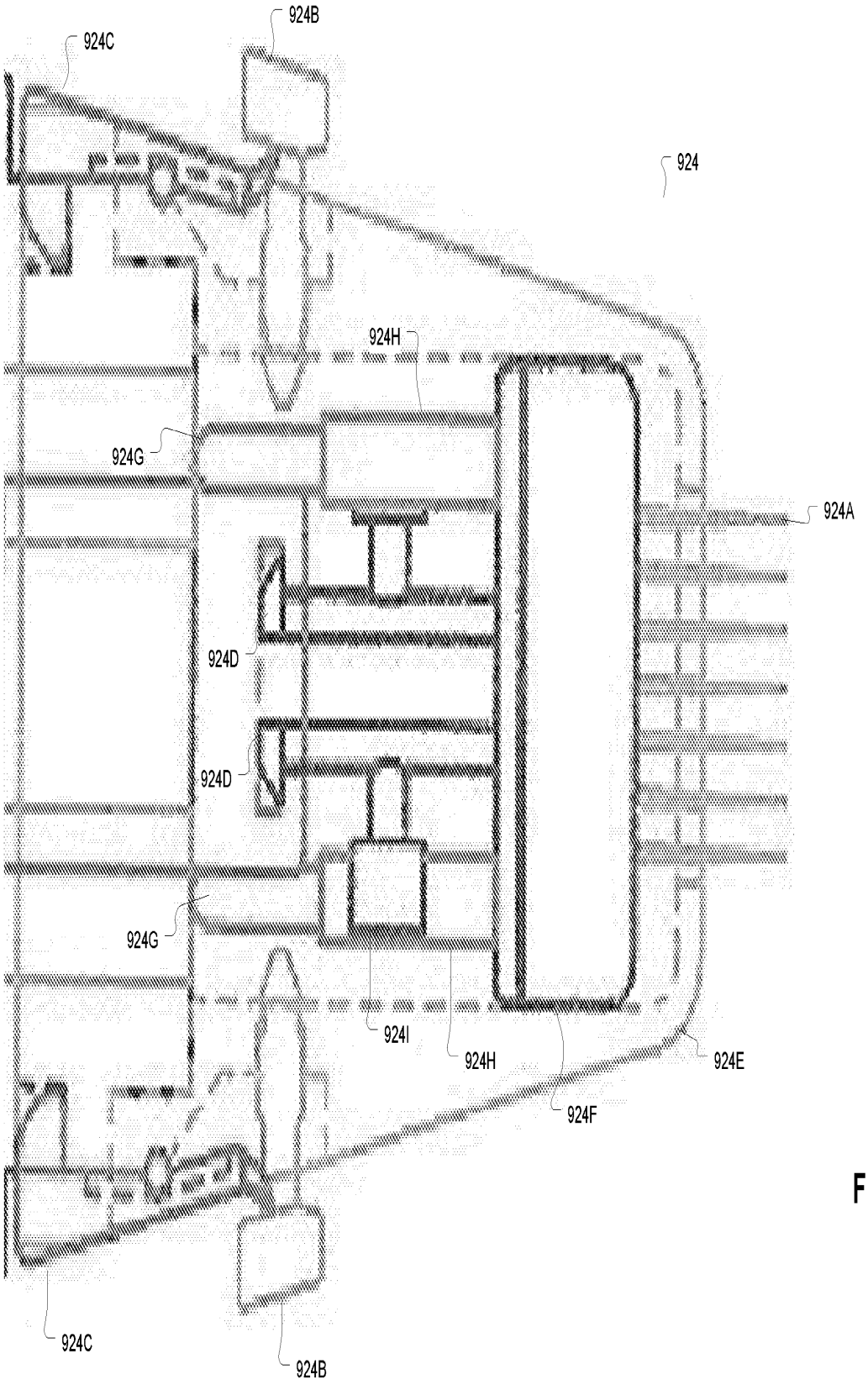
924B
924C
924
924H
924G
924A
924D
924D
924G
924I
924H
924E
924F
924C
924B

FIGURE 11A

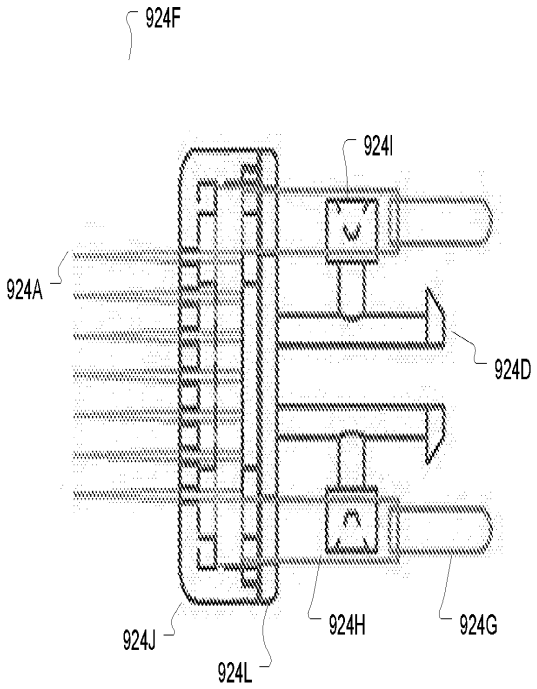


FIGURE 11B

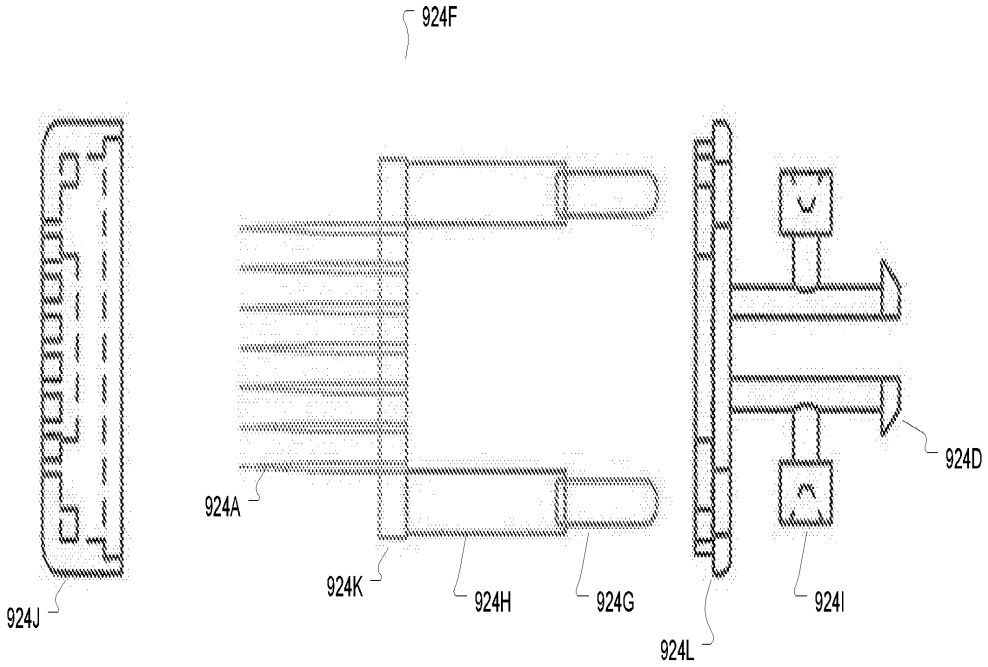


FIGURE 11C

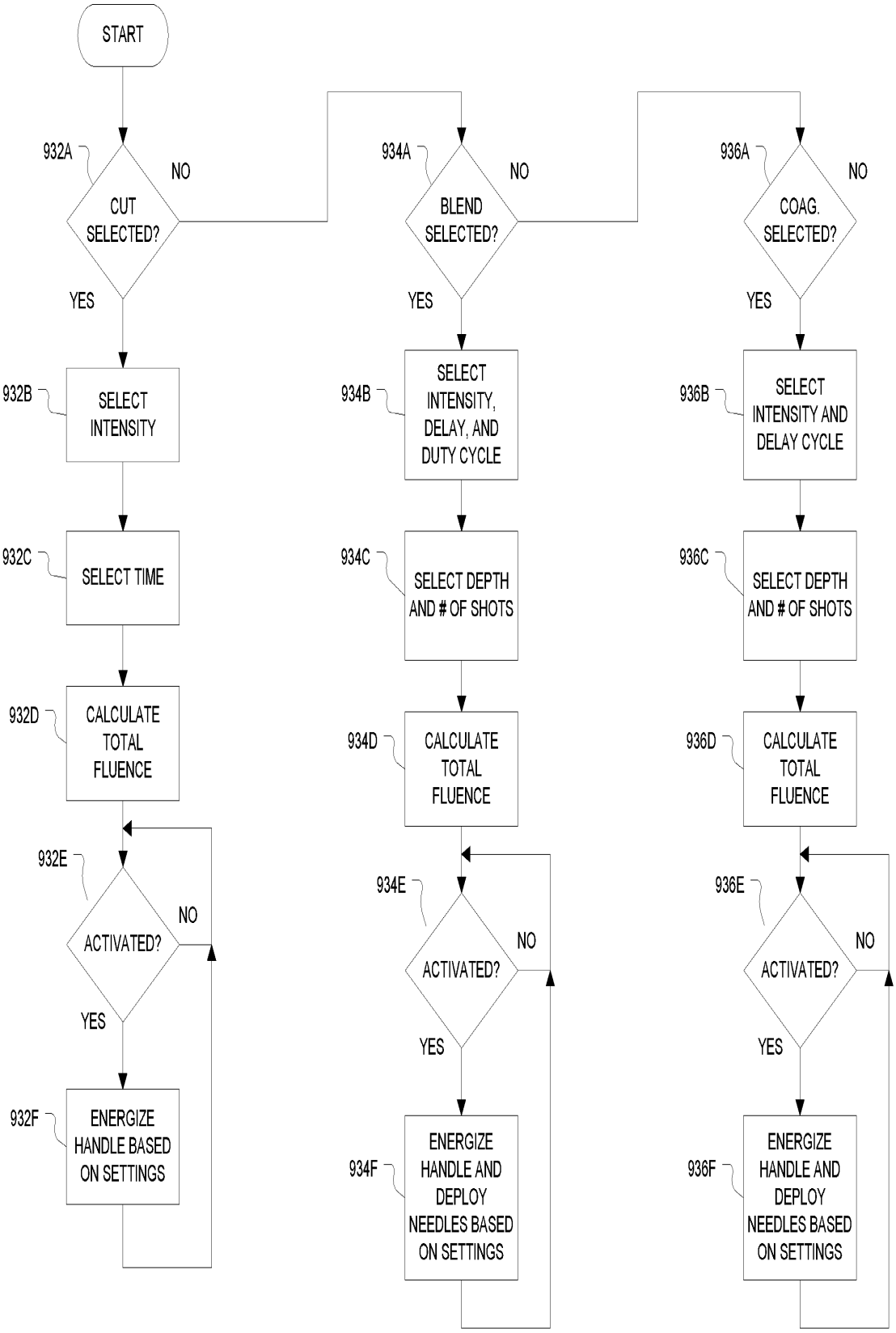
START
932A
CUT SELECTED?
NO
YES
932B
SELECT INTENSITY
932C
SELECT TIME
932D
CALCULATE TOTAL FLUENCE
932E
ACTIVATED?
NO
YES
932F
ENERGIZE HANDLE BASED ON SETTINGS
934A
BLEND SELECTED?
NO
YES
934B
SELECT INTENSITY, DELAY, AND DUTY CYCLE
934C
SELECT DEPTH AND # OF SHOTS
934D
CALCULATE TOTAL FLUENCE
934E
ACTIVATED?
NO
YES
934F
ENERGIZE HANDLE AND DEPLOY NEEDLES BASED ON SETTINGS
936A
COAG. SELECTED?
NO
YES
936B
SELECT INTENSITY AND DELAY CYCLE
936C
SELECT DEPTH AND # OF SHOTS
936D
CALCULATE TOTAL FLUENCE
936E
ACTIVATED?
NO
YES
936F
ENERGIZE HANDLE AND DEPLOY NEEDLES BASED ON SETTINGS
930

FIGURE 12

PTO/SB/01A (09-12)
Approved for use through 01/31/2014. OMB 0651-0032
U.S. Patent and Trademark Office: U.S. DEPARTMENT OF COMMERCE
Under the Paperwork Reduction Act of 1995, no persons are required to respond to a collection of information unless it displays a valid OMB control number.

# DECLARATION (37 CFR 1.63) FOR UTILITY OR DESIGN APPLICATION USING AN APPLICATION DATA SHEET (37 CFR 1.76)

| Title of Invention | METHOD, SYSTEM, AND APPARATUS FOR DERMALOGICAL TREATMENT |
|---|---|

As the below named inventor(s), I/we declare that:

This declaration is directed to:

- ☐ The attached application, or
- ☒ United States Application or PCT international application number PCT/KR2012/001335 filed on February 22, 2012
  - ☐ As amended on _____ (if applicable);

I/we believe that I/we am/are the original and first inventor(s) of the subject matter which is claimed and for which a patent is sought;

I/we have reviewed and understand the contents of the above-identified application, including the claims, as amended by any amendment specifically referred to above;

I/we acknowledge the duty to disclose to the United States Patent and Trademark Office all information known to me/us to be material to patentability as defined in 37 CFR 1.56, including for continuation-in-part applications, material information which became available between the filing date of the prior application and the national or PCT International filing date of the continuation-in-part application. The above-identified application was made or authorized to be made by me/us.

## WARNING:

Petitioner/applicant is cautioned to avoid submitting personal information in documents filed in a patent application that may contribute to identity theft. Personal information such as social security numbers, bank account numbers, or credit card numbers (other than a check or credit card authorization form PTO-2038 submitted for payment purposes) is never required by the USPTO to support a petition or an application. If this type of personal information is included in documents submitted to the USPTO, petitioners/applicants should consider redacting such personal information from the documents before submitting them to the USPTO. Petitioner/applicant is advised that the record of a patent application is available to the public after publication of the application (unless a non-publication request in compliance with 37 CFR 1.213(a) is made in the application) or issuance of a patent. Furthermore, the record from an abandoned application may also be available to the public if the application is referenced in a published application or an issued patent (see 37 CFR 1.14). Checks and credit card authorization forms PTO-2038 submitted for payment purposes are not retained in the application file and therefore are not publicly available.

All statements made herein of my/own knowledge are true, all statements made herein on information and belief are believed to be true, and further that these statements were made with the knowledge that willful false statements and the like are punishable by fine or imprisonment, or both, under 18 U.S.C. 1001, and may jeopardize the validity of the application or any patent issuing thereon. I hereby acknowledge that any willful false statement made in this declaration is punishable under 18 U.S.C. 1001 by fine or imprisonment of not more than five (5), or both.

FULL NAME OF INVENTOR(S)

Inventor one: Jong ju Na Date: 1 - 19 - 2014

Signature: _____ Citizen of: KR

Inventor two: _____ Date: _____

Signature: _____ Citizen of: _____

☐ Additional inventors or a legal representative are being named on _____ additional form(s) attached hereto.

This collection of information is required by 35 U.S.C. 115 and 37 CFR 1.63. The information is required to obtain or retain a benefit by the public which is to file (and by the USPTO to process) an application. Confidentiality is governed by 35 U.S.C. 122 and 37 CFR 1.11 and 1.14. This collection is estimated to take 1 minute to complete, including gathering, preparing, and submitting the completed application form to the USPTO. Time will vary depending upon the individual case. Any comments on the amount of time you require to complete this form and/or suggestions for reducing this burden, should be sent to the Chief Information Officer, U.S. Patent and Trademark Office, U.S. Department of Commerce, P.O. Box 1450, Alexandria, VA 22313-1450. DO NOT SEND FEES OR COMPLETED FORMS TO THIS ADDRESS. **SEND TO: Commissioner for Patents, P.O. Box 1450, Alexandria, VA 22313-1450.**

*If you need assistance in completing the form, call 1-800-PTO-9199 and select option 2.*

UNITED STATES PATENT APPLICATION

# METHOD, SYSTEM, AND APPARATUS FOR DERMATOLOGICAL TREATMENT

**INVENTOR**

**Jongju Na of Republic of Korea**

Prepared by:

Merle W. Richman, Esq.
P.O. Box 3333
La Jolla, CA 92038-3333
ATTORNEY DOCKET NA001KR_US2

# METHOD, SYSTEM, AND APPARATUS FOR DERMATOLOGICAL TREATMENT

## Cross Reference to Related Applications

**[0001]** The present application claims the benefit of priority to Republic of Korea Application Number 10-2008-0076993, entitled "Electrical system, skin, skin care and cosmetic electricity," filed on August 6, 2008, PCT Application Number PCT/US2008/074131, entitled "METHOD, SYSTEM, AND APPARATUS FOR DERMATOLOGICAL TREATMENT", Attorney Docket No. NA001PCT filed on August 22, 2008, and US Application Number 13/060,274, entitled "METHOD, SYSTEM, AND APPARATUS FOR DERMATOLOGICAL TREATMENT", Attorney Docket No. NA001US filed on February 22, 2011, the entirety of each is incorporated by reference.

## Technical Field

**[0002]** Various embodiments described herein relate generally to treating dermatological tissue, including systems, and methods used in treating dermatological tissue.

## Background Information

**[0003]** It may be desirable to treat dermatological tissue; the present invention provides such treatment.

## Brief Description of the Drawings

**[0004]** FIG. 1A is a simplified isometric diagram of a dermatological treatment apparatus according to various embodiments.

**[0005]** FIG. 1B is a simplified, side diagram of the dermatological treatment apparatus according to various embodiments.

**[0006]** FIG. 1C is a simplified, exploded layer view of the dermatological treatment apparatus according to various embodiments.

**[0007]** FIG. 1D is a simplified view of a layer of a dermatological treatment apparatus according to various embodiments.

**[0008]** FIG. 2A is a simplified isometric diagram of a dermatological treatment architecture according to various embodiments.

**[0009]** FIG. 2B is a simplified cross-sectional diagram of a dermatological treatment apparatus according to various embodiments.

**[0010]** FIG. 2C is a simplified cross-sectional diagram of another dermatological treatment apparatus according to various embodiments.

**[0011]** FIG. 2D is a simplified cross-sectional diagram of another dermatological treatment apparatus according to various embodiments.

**[0012]** FIG. 2E is a simplified view of a layer of a dermatological treatment apparatus according to various embodiments.

**[0013]** FIG. 2F is a simplified, exploded view of layers of the dermatological treatment apparatus according to various embodiments.

**[0014]** FIG. 3A is a simplified isometric diagram of a dermatological treatment apparatus according to various embodiments.

**[0015]** FIG. 3B is a simplified isometric diagram of another dermatological treatment apparatus according to various embodiments.

**[0016]** FIG. 4A is a simplified view of a layer of a dermatological treatment apparatus according to various embodiments.

**[0017]** FIG. 4B is a simplified view of a layer and apparatus of a dermatological treatment system according to various embodiments.

**[0018]** FIG. 4C is a simplified view of a layer and apparatus of a dermatological treatment system according to various embodiments.

**[0019]** FIGs. 5A-6 are diagrams of signals that may be applied to one or more dermatological treatment systems according to various embodiments.

**[0020]** FIG. 7A-7C are flow diagrams illustrating dermatological treatment system processing algorithms according to various embodiments.

**[0021]** FIG. 8 is a block diagram of an article according to various embodiments.

**[0022]** FIG. 9A is a simplified block diagram of a dermatological treatment architecture according to various embodiments.

**[0023]** FIG. 9B is a block diagram of an article according to various embodiments that may be employed in architecture of FIG. 9A.

**[0024]** FIG. 9C is a simplified cross-sectional diagram of a cartridge based dermatological treatment apparatus with the needles retracted according to various embodiments.

**[0025]** FIG. 9D is a simplified cross-sectional diagram of a cartridge based dermatological treatment apparatus with the needles deployed according to various embodiments.

**[0026]** FIG. 10A-10D are simplified, partial, cross-sectional diagrams of a cartridge in various stages of attachment to a dermatological treatment apparatus according to various embodiments.

**[0027]** FIG. 10E is a simplified, partial, cross-sectional diagram of a dermatological treatment apparatus with needles deployed according to various embodiments.

**[0028]** FIG. 10F is a simplified cross-sectional diagram of a cartridge based dermatological treatment apparatus cartridge interface according to various embodiments.

**[0029]** FIG. 11A is a simplified, partial, cross-sectional diagram of a dermatological treatment apparatus cartridge coupled to a handle with needles deployed according to various embodiments.

**[0030]** FIG. 11B is a simplified, cross-sectional diagram of a cartridge needle assembly according to various embodiments.

**[0031]** FIG. 11C is a simplified, cross-sectional, exploded diagram of a cartridge needle assembly according to various embodiments.

**[0032]** FIG. 12 is a flow diagram illustrating a dermatological treatment system processing algorithms according to various embodiments.

## Detailed Description

**[0033]** FIG. 1A is a simplified isometric diagram and FIG. 1B is a simplified side view of a dermatological treatment apparatus 10 according to various embodiments. The apparatus 10 may include a user handle 220 coupled to an acupuncture plate 200. In an embodiment the plate 200 may be elastically coupled to the handle segment 222 via an elastomeric section 210. The elastomeric section may be comprised of a combination of elastomeric materials and non-elastomeric materials. The elastomeric materials may include plastics, rubber (synthetic or natural), and spring(s).

**[0034]** FIG. 1C includes a simplified exploded view of an embodiment of an acupuncture plate 200 according to various embodiments. The plate 200 may include an upper, substantially rigid section or layer 290, deformable or elastic section 270 or layer, and acupuncture section or layer 250. The acupuncture section 250 may include a plurality of acupuncture pins or needles 230. FIG. 1D is a simplified bottom view of the plate 200 showing the location or holes 212 for the pins or needles 230. In an embodiment the plate 200 may have a rectangular cross section having a dimensional about 1 to 4 cm in width and about 1 to 6 cm in length. The plate 200 may any shape including circular, elliptical, polygon, or other shape where the shape may be particular to a dermatological area to be treated.

**[0035]** In an embodiment the plate may include about 140 pins or needles 230 uniformly separated. Each needle may be about 0.1 to 0.4 mm in diameter and 0.2 mm to 1.4 mm in length including 0.3 mm diameter and 0.8 mm in length in an embodiment. The elastic section or layer 270 may be comprised of a combination of elastomeric materials and non-elastomeric materials. The elastomeric materials may include plastics, rubber (synthetic or natural), and spring(s). The pin section 230 may be coupled directly or indirectly to the upper section 290 via the elastic section 250, including via glues, screws, welds, or other connection. In an embodiment the pin section 250 may include elastomers to enable at least partial deformation of the pin section 250 about the pins 230.

**[0036]** In operation a user may employ the apparatus 10 to create a plurality of micro-wounds or holes in dermatological layers of a mammal's 20 skin or dermis. The micro-wound or hole creation may improve the absorption or application of one or more chemicals applied on or about the micro-wounds or holes.

**[0037]** FIG. 2A is a simplified diagram of a dermatological treatment architecture 310 according to various embodiments. Architecture 310 includes an acupuncture apparatus 320 and an

electrical signal generation system 300. The electrical signal generation system 300 may be electrically coupled to the acupuncture apparatus 320 via one or more wires 300A and to a mammal 20 to be treated via one or more wires 300B. FIG. 2B is a simplified cross-sectional diagram of the acupuncture apparatus 320 according to various embodiments. The apparatus 320 may include a handle 330, elastic section 333, electrical interface 340, internal wire(s) 331and plate 350. The pins 351 may have a length A (0.3 mm to 2.1 mm in an embodiment) where at least one pin 351 is electrically coupled to the electrical interface 340 via the internal wire 331. The electrical interface 340 may be removably connected to the system 300 wire 300A.

**[0038]** The electrical signal generation system 300 may generate a variety of signals (such as shown in FIGS. 5A to 6) to vibrate one or more pins 351 electrically coupled to the system 300 via the internal wire 331 and lead 300A. A pin vibration 351 may increase the micro-wound or cut formed in dermis by the pin 351. FIG. 2C is a simplified cross-sectional diagram of an acupuncture apparatus 360 according to various embodiments. The apparatus 360 may include a handle 330, an elastic section 333, an electrical conductive interface 390, internal wire(s) 331, signal generator 370, switch 375, and plate 350. The signal generator 370 may be coupled to at least one pin 351 via internal wire 331 and coupled to the conductive interface 390.

**[0039]** The signal generator or module 370 may generate a variety of signals (such as shown in FIGS. 5A to 6) to vibrate one or more pins 351 electrically coupled to the system 300 via the internal wire 331 and the conductive interface 390. In operation a user 20 may touch the conductive interface 390 and place one or more electrically coupled pins 351 in contact with their dermis to form an electrical pathway from the pin 351 to the electrical conductive interface 390. The signal generator 370 may include a battery to supply energy to generate one or more electrical signals. The switch 375 coupled to the generator 370 may cause the generator to produce one or more electrical signals for a predetermined time interval or until the switch 375 is triggered again. As noted a pin vibration 351 may increase the micro-wound or cut formed in dermis by the pin 351.

**[0040]** FIG. 2D is a simplified cross-sectional diagram of an acupuncture apparatus 362 according to various embodiments. The apparatus 362 may include a handle 330, an elastic section 333, internal wire(s) 331, 332, signal generator 370, switch 375, and plate 350. The signal generator 370 may be coupled to at least one pin 351 via internal wire 331 and coupled to at least one other pin 352 via internal wire 332. When active the pins 351, 352 may form at least one dipole pair. The

signal generator or module 370 may generate a variety of signals (such as shown in FIGS. 5A to 6) to vibrate one or more dipole pair or bipolar pins 351, 352.

**[0041]** FIG. 2F includes a simplified exploded view of an embodiment of an acupuncture plate 350 including at least one electrically coupled pin 351 according to various embodiments. The plate 350 may include an upper, substantially rigid section or layer 357, deformable or elastic section 355 or layer, and acupuncture section or layer 353. The acupuncture section 353 may include a plurality of acupuncture pins or needles 351 where at least one pin 351 is electrically coupled to the wire 331. In a bipolar configuration a second wire 332 may be coupled to at least one other pin 351. FIG. 2E is a simplified bottom view of the plate 350 showing the pins or needles 359, 357 where the pins may be electrically coupled to a first wire 331 and a second wire 332 to form dipole pair (bipolar pins).

**[0042]** In an embodiment the plate 350 may have a rectangular cross section having a dimensional about 1 to 4 cm in width and about 1 to 6 cm in length. The plate 350 may any shape including circular, elliptical, polygon, or other shape where the shape may be particular to a dermatological area to be treated.

**[0043]** In an embodiment the plate may include about 140 pins or needles 351 uniformly separated. Each needle may be about 0.1 to 0.4 mm in diameter and 0.2 mm to 1.4 mm in length including 0.3 mm diameter and 0.8 mm in length in an embodiment. The elastic section or layer 355 may be comprised of a combination of elastomeric materials and non-elastomeric materials. The elastomeric materials may include plastics, rubber (synthetic or natural), and spring(s). The pin section 353 may be coupled directly or indirectly to the upper section 357 via the elastic section 353, including via glues, screws, welds, or other connection. In an embodiment the pin section 353 may include elastomers to enable at least partial deformation of the pin section 353 about the pins 351.

**[0044]** FIGS. 3A and 3B are simplified isometric diagrams of acupuncture apparatus 400, 460 including at least one pin 451 that may be coupled to an electrical signal via an internal wire 458. Each apparatus 400, 460 includes curved roller 450 having a plurality of acupuncture pins 451 where the pins 451 may be similar to pins 351. In apparatus 400, the electrical lead wire 400A may be coupled to an electrical interface 410 in the apparatus handle 430 where the interface 410 is electrically coupled to the internal wire 458. In apparatus 460, the handle 430 may include a signal generator 470 similar to generator 370, switch 475, and conduction surface 490. Apparatus 460 may

operate similar to apparatus 360 in operation other than the rolling capability of the apparatus 460, 400. In an embodiment the rollers 450 may have various configurations to conform to a dermal area to be treated.

**[0045]** In any of the above apparatus 10, 320, 350, 360, 400, 460, the plate or roller 200, 350, 450 may include a plurality of embedded LEDs 32A, 32B, a battery 52, a controller 54, and an antenna 56 as shown in FIG. 4A. In an embodiment the LED 32A may be configured to emit energy of a first particular frequency range and the LED 32B may be configured to emit energy of a second particular frequency range. The surface 22 of a roller 450, plate 200, 350, 450 may also be embedded with a chemical 22A that may be used to treat dermatological cells. The chemical 22A may be reactive to the first and the second frequency ranges. Further dermatological cells may be reactive to the first and the second frequency ranges. In addition, the combination of the chemical 22A and the application of the first and the second frequency ranges to the chemical 22A and dermatological cells may have a synergetic effect.

**[0046]** In an embodiment the chemical 22A may be applied directly to the dermatological cells to be treated. In a further embodiment a chemical 22A may not be employed in addition to the apparatus 10, 320, 350, 360, 400, 460. In an embodiment the pin section 250, 353, may be translucent and comprised of polyurethane, medical silicon, or other pliable, translucent, hypoallergenic material.

**[0047]** In an embodiment the local controller 54 and battery 52 may also be embedded in the upper section 290, 357, pin section 230, 351, or the handle 220, 330, or separately between these sections. The controller 54 may be electrically coupled to the one or more LEDS 32A, 32B. The controller 54 may also be coupled to a battery 52. The controller 54 may generate one or more signals for LEDs 32A, 32B as a function of a user switch 75, 56. The signals may vary as a function of the first and second frequency ranges. The controller 54 may include one or more timers 58 that may limit the application of energy to the LEDs 32A, 32B to predetermined time intervals. In an embodiment the controller may also be coupled to an antenna 56 to receive or transmit one or more signals related to the transmission of energy to one or more LEDs 32A, 32B. In an embodiment the system 10 may be configured to treat a particular segment of dermatological cells such as a face. The apparatus 10 may be configured to conform to a user's anatomy so that emitted light is focused on dermatological cells. In another embodiment 200, the system 200 may be configured to treat

another anatomical region including dermatological cells on an arm, leg, chest, hands, feet, neck, or other region.

**[0048]** In an embodiment 510 shown in FIG. 4B, a controller 54, an antenna 104, and a power source 60 may be located in external to the apparatus 10, 320, 360. The power source 60 may be coupled to the controller 54. The controller 54 may be coupled to one or more LEDs 32A, 32B via one or more electric wires 106. The controller 54 may generate one or more signals for LEDs 32A, 32B as a function of the user switch 56. The signals may vary as a function of the first and second frequency ranges. The controller 54 may include one or more timers 58 that may limit the application of energy to the LEDs 32A, 32B to predetermined time intervals. In an embodiment the controller may also be coupled to an antenna 104 to receive or transmit one or more signals related to the transmission of energy to one or more LEDs 32A, 32B.

**[0049]** In any of the above apparatus 10, 320, 350, 360, 400, 460, the plate or roller 200, 350, 450 may include a plurality of embedded LED lens 536, a fiber optic pathway 534, and an LED 532. In this embodiment the LED 532 may be coupled to lens 536 via the fiber optic pathway 534. The controller 540 may generate an LED signal via the LED 532 that is transmitted to dermatological cells via the lens 536 and the fiber optic pathway 534.

**[0050]** FIGS.5A-5B are diagrams of electrical signal waveforms 650, 630, 640 that may be applied to one or more LEDs 32A, 32B, 532 and to the pins 230, 351, 451 according to various embodiments. The signal waveform 650 includes several square-wave pulses 652, 654, 656 that may be applied to an LED 32A, 32B, 532. Each pulse 652, 654, 656 may a have a similar magnitude and envelope. The waveform 650 may be used to energize an LED 32A, 32B, 532 and to the pins 230, 351, 451 periodically P1 for a predetermined interval T1 where each pulse 652, 654, 656 has a amplitude A1. In an embodiment, A1 may be about 0.1 milliamperes (mA) to 10 mA, the pulse width T1 may be about 100 microseconds (μs) to 500 μs and the period P1 may from 100 ms to 500 ms as a function of the energy required to create capacitance in a liquid. In another embodiment, A1 may be about 0.5 milliamperes (mA) to 5 mA, the pulse width T1 may be about 200 microsecond (μs) and the period P1 may about 250 ms as a function of the energy to drive an LED or cause one or more pins 230, 351, 451 to vibrate.

**[0051]** In FIG. 5B a signal waveform 630 may be applied to a first LED 32A, 32B, 532 module or group and to the pins 230, 351, 451 and a second waveform 640 may be applied or used to energize a second LED 32A, 32B, 532 module and the pins 230, 351, 451, 352. The signal

waveform 630 includes several square-wave pulses 632, 634, and 636 and the signal waveform 640 includes several square-wave pulses 642, 644, and 646. Each pulse 632, 634, 636, 642, 644, 646 may a have a similar magnitude and envelope. The waveform 630 may be used to energize a first LED 32A, 32B, 332 module and the pins 230, 351, 451 periodically P1 for a predetermined interval T1 where each pulse 632, 634, 636 has an amplitude A1. The waveform 640 may be used to energize a second LED 32A, 32B, 332 module and the pins 230, 351, 451 periodically P2 for a predetermined interval T2 where each pulse 642, 644, 646 has an amplitude B1. The pulse width T1, T2 may be about 100 microseconds (μs) to 500 μs and the period P1, P2 may from 100 ms to 500 ms as a function of the energy to affect dermatological cells or chemicals 22A. In another embodiment, A1, A2 may be about 0.5 milliamperes (mA) to 5 mA, the pulse width T1, T2 may be about 200 microsecond (μs) and the period P1, P2 may about 250 ms as a function of the energy required to affect dermatological cells or chemicals 22A. In an embodiment the pulses 632, 634, 636 do not substantially overlap the pulses 642, 644, 646. In an embodiment T1 > T2 and P2 is an integer multiple of P1.

**[0052]** FIG. 6 depicts a waveform 670 that includes multiple pulses 672, 674, 676, 678, 682, and 684 that may not overlap in the time or the frequency domain. In an embodiment each pulse 672, 674, 676, 678, 682, and 684 may have a pulse width T3, and frequency spectrum width F1 and period P3. The pulse 672 is frequency offset from the pulse 674, the pulse 676 is frequency offset from the pulse 678, and the pulse 682 is frequency offset from the pulse 684. The pulses 672, 674, 676, 678, 682, and 684 may be applied to an LED module to affect dermatological cells or chemicals 22A and the pins 230, 351, 451. Pulses 672, 674 having different frequency spectrums may enable different LED stimulation. In an embodiment the pulses 672, 676, 682 may be applied to a first LED module and the pulses 674, 678, 684 may be applied to a second LED module. The frequency separation between the respective pulses may enable simultaneous energization of a first and a second LED module and the pins 230, 351, 451 and subsequent and independent spectrum generation.

**[0053]** In an embodiment the invention may employ the algorithm 740 shown in FIG. 7A to apply therapy to dermatological cells. A user, clinician, or equipment may place an apparatus 10, 320, 360, 360, 400, 460 on dermatological cells to be treated (activity 741) including pressing the apparatus against the cells firmly enough to embed one or more pins 251, 351, 451 in the cells. A first signal such as shown in FIGS. 5A, 5B, and 6 may be applied to a first LED module or group

(32A) and the pins 230, 351, 451 of a dermatological apparatus 10, 320, 360, 360, 400, 460 (activity 742) for a predetermined time period (activity 744). A second signal such as shown in FIGS. 5A, 5B, and 6 may be applied to a second LED module or group (32B) and the pins 230, 351, 451 of a dermatological apparatus 10, 320, 360, 360, 400, 460 (activity 746) for a predetermined time period (activity 748). The signals applied to the groups may be selected to stimulate dermatological cells or chemicals 22A or cause vibration of one or more pins 251, 351, 451.

**[0054]** In another embodiment the invention may employ the algorithm 750 shown in FIG. 7B to apply therapy to dermatological cells. A user, clinician, or equipment may apply a light sensitive chemical on an apparatus 10, 320, 360, 360, 400, 460 or on dermatological cells to be treated (activity 751). The user, clinician, or equipment may place apparatus 10, 320, 360, 360, 400, 460 on dermatological cells to be treated (activity 752). A signal such as shown in FIGS. 5A, 5B, and 6 may be applied to a LED module or group (32A or 32B) and the pins 230, 351, 451 (activity 354) for a predetermined time period (activity 356).

**[0055]** In another embodiment the invention may employ the algorithm 760 shown in FIG. 7C to apply therapy to dermatological cells. A user, clinician, or equipment may apply a light sensitive chemical on an apparatus 10, 320, 360, 360, 400, 460 or on dermatological cells to be treated (activity 761). The user, clinician, or equipment may place an apparatus 10, 320, 360, 360, 400, 460 on dermatological cells to be treated (activity 762). A first signal such as shown in FIGS. 5A, 5B, and 6 may be applied to a first LED module or group (32A) and one or more pins 251, 351, 451 of a dermatological apparatus 10, 320, 360, 360, 400, 460 (activity 763) for a predetermined time period (activity 764). A second signal such as shown in FIGS. 5A, 5B, and 6 may be applied to a second LED module or group (32B) and one or more pins 251, 351, 451 of a dermatological apparatus 10, 320, 360, 360, 400, 460 (activity 766) for a predetermined time period (activity 768).

**[0056]** The apparatus 10, 320, 360, 360, 400, 460 may be used to employ cosmetic or medications or other chemicals directly on dermatological cells such as skin with the addition of light of specific frequencies for treatment and healing of epidermal cells of the skin or tissue below the skin with the object of assisting the agents used in delivery, uptake, action and function more effectively. The LEDs 32A, 32B may create the specific frequencies of light. The apparatus 10, 320, 360, 360, 400, 460, light application may enable cosmetic or medication or other active chemicals 22A on dermatological cells for longer time periods while preventing dehydration of the

applied substances. Such light application may improve the efficacy of cosmetic or medication or other active chemical as a function of the selected wavelengths or frequencies.

**[0057]** Further the dermatological system application may increase cellular activity and help heal tissue faster and facilitate the delivery, uptake and use in the cell of the cosmetics, medications, or chemicals 22A used. The LED light of specific frequencies may increase fibroblast production and collagen as well as other activities of the cell including stimulating the organelles and mitochondria to produce ATP for cell energy for functioning, decreasing treatment time and facilitate healing. The apparatus 10, 320, 360, 360, 400, 460 make the agents used on the body more efficacious and useful to the body on a cellular level.

**[0058]** The apparatus 10, 320, 360, 360, 400, 460 may stimulate the basic energy processes in the mitochondria (energy compartments) of each cell, particularly when near-infrared light is used to activate the color sensitive chemicals (chromophores, cytochrome systems) inside but not limited to these spectrum alone as the UV, other visible and IR spectrums may also be usable. In an embodiment optimal LED wavelengths for skin repair may include 640, 680, 730 nanometers (nm) wavelengths to IR 880 nm. Further application of blue light 400 nm to 490 via the apparatus 10, 320, 360, 360, 400, 460 may inhibit the growth and kill bacteria, fungus in and on dermatological cells. The apparatus 10, 320, 360, 360, 400, 460 may be employed to apply cosmetics, medications and/or other actives directly to the skin and maintain their presence long-term while using LED or other actinic light to increase their effect on the cells and tissue in the body. The apparatus 10, 320, 360, 360, 400, 460 are also highly portability and enable user mobility during treatment.

**[0059]** Chemicals 22A may include cosmetics, medications and other actives appropriate for dermatological cells including AHA's (alpha hydroxy acid), natural oils, aloe vera compounds, collagen boosters, bt, chitosan, daeses, endorphins, photodynamic drugs (PDT) like (Photofrin or ALA), vitamins A, C E or others, kojic acid, retinols or other exfoliant, salicylic acid, anti oxidants or other youth boosters and anti aging cosmetic or medications, antiseptic, antibiotics, anti-cancer agents, aroma therapy agents, fruit and vegetable extracts, anti-inflammatory agents, pain relievers, hormones, depilatories, and others, but the scope of this invention is not limited to these alone but can include any helpful medication, herbal formula or active compound for the skin and/or other tissues.

**[0060]** FIG. 8 is a block diagram of an article 780 according to various embodiments. The article 780 shown in FIG. 8 may be used in various embodiments as a part of apparatus 10, 320,

360, 360, 400, 460 where the article 780 may be any computing device including a personal data assistant, cellular telephone, laptop computer, or desktop computer. The article 780 may include a central processing unit (CPU) 782, a random access memory (RAM) 784, a read only memory (ROM") 806, a display 788, a user input device 812, a transceiver application specific integrated circuit (ASIC) 816, a digital to analog (D/A) and analog to digital (A/D) convertor 815, a microphone 808, a speaker 802, and an antenna 804. The CPU 782 may include an OS module 814 and an application module 813. The RAM 784 may include switches 56 and timers 58.

**[0061]** The ROM 806 is coupled to the CPU 782 and may store the program instructions to be executed by the CPU 782. The RAM 784 is coupled to the CPU 782 and may store temporary program data, overhead information, and the queues 798. The user input device 812 may comprise an input device such as a keypad, touch pad screen, track ball or other similar input device that allows the user to navigate through menus in order to operate the article 780. The display 788 may be an output device such as a CRT, LCD, LED or other lighting apparatus that enables the user to read, view, or hear user detectable signals.

**[0062]** The microphone 808 and speaker 802 may be incorporated into the device 780. The microphone 808 and speaker 802 may also be separated from the device 780. Received data may be transmitted to the CPU 782 via a bus 796 where the data may include signals for an LED 32A, 32B, 332 or optical module or wires 331, 458. The transceiver ASIC 816 may include an instruction set necessary to communicate data, screens, or signals. The ASIC 816 may be coupled to the antenna 804 to communicate wireless messages, pages, and signal information within the signal. When a message is received by the transceiver ASIC 816, its corresponding data may be transferred to the CPU 782 via the serial bus 796. The data can include wireless protocol, overhead information, and data to be processed by the device 780 in accordance with the methods described herein.

**[0063]** The D/A and A/D convertor 815 may be coupled to one or more optical modules to generate a signal to be used to energize one of the optical modules. The D/A and A/D convertor 815 may also be coupled to one devices such as LEDs 32A, 32B and the pins 251, 351, 451. Any of the components previously described can be implemented in a number of ways, including embodiments in software. Any of the components previously described can be implemented in a number of ways, including embodiments in software. Thus, the LEDs 32A, 32B, pins 251, 351, 451, controllers 54, switch 56, timers 58, controller 320 may all be characterized as "modules" herein. The modules may include hardware circuitry, single or multi-processor circuits, memory circuits, software

program modules and objects, firmware, and combinations thereof, as desired by the architect of the system 10, 30, 50, 60 and as appropriate for particular implementations of various embodiments.

**[0064]** FIG. 9A is a simplified block diagram of a dermatological treatment architecture (DTA) 900 according to various embodiments. As shown in FIG. 9A, architecture 900 includes a signal generation and control module (SGC) 910, a handle module 920, and an actuator module 930. In an embodiment the handle module 920 may include a deployable needle module 924 and a motor and LED module 922. In an embodiment the deployable needle module 924 may be releasably coupled to the motor and LED module 922. In a further embodiment the deployable needle module 924 may be a disposable cartridge module 924 to be removed and disposed after one or more treatments or for each patient, client, or user.

**[0065]** The SGC 910 may include one or more displays 912A, user input device 912B, handle module interface 914A, and actuator module interface 914C, electrical energy storage module 913, and one or more wheels 916A, 916B. In an embodiment the SGC 910 may be moveable and the wheels 916A, 916B may be lockable to prevent unintentional movement of the SGC 910 once positioned where desired by a user. In another embodiment the SGC 910 may also be coupled to the external power source including an alternating current (AC) grid source.

**[0066]** In an embodiment the displays 912A may indicate operational parameters for a hand module 920 to be coupled or coupled to the SGC 910. The displays 920 may be touch sensitive so a user may configure one or more operational parameters. In an embodiment the operational parameters may include electrical energy signal intensity to be applied the hand module 920, timing of such energy application, needle deployment timing and depth(s), LED intensity and timing, and number of cycles or shots to be conducted for each actuation via the actuator 930. In an embodiment the actuator 930 may be integral to the SGC 910 or a separate device wireless coupled or wired to the SGC 910 via a cable 914D and the SGC 910 actuator module interface 914C.

**[0067]** In an embodiment the actuator 930 may a mechanical device including a foot actuator or hand based actuator. The actuator 930 may also be an electronic device having an ASIC or running an application on a device (such as a computer, laptop, PDA, cellphone, or other electronic device) such as the module 780 shown in FIG. 8. In an embodiment the application may enable a user to set or control any of the possible operational parameters of the SGC 910 and initiate actuation a device 920 coupled to the SGC 910. FIG. 9B is a block diagram of a CPU module 911 that may be employed in the SGC 910 according to various embodiments.

**[0068]** The CPU module 911 may include a radio frequency (RF) signal generator (RFSG) module 911A, a needle deployment motor controller (NDMC) module 911B, and a photonic signal generator module (PSG) 911C. In an embodiment the photonic signal generator module 911C may be an LED signal generator or controller module 911C. In an embodiment a hand module 920 may include one or more photonic generation devices or modules (922I in FIG. 10A, 10B) where the PSG 911C may generate control or energy signals that cause the photonic modules 922I to generate photons of one or more frequencies with a desired intensity.

**[0069]** The NDMC 911B may control the deployment of one or more needles 924A of a deployable needle module 924 (FIG. 9C) based on one or more user selected operational parameters. The parameters may determine the depth and duty cycle related to the needle(s) 924A deployment in an embodiment. The signals generated by the NDMC 911B to control needle deployment may vary as a function of motor(s) (922A, FIG. 9C) employed to drive one or more needles 924A. As described above an electrical signal may also be applied to the needle(s) 924A to cause vibration of the needles or enable cutting and coagulation of the tissue in which the needles 924A are deployed. The RFSG 911A may generate one or more electrical signals to be applied to one or more needles 924A based on the selected operational parameters. An electrical signal may be applied to a single needle 924A, group of needles 924A (mono-polar configuration) or pair(s) of needles 924A (bipolar configuration) in an embodiment. In an embodiment the RFSG 911A may apply signals 650, 630, 640, 670 shown in FIGs. 5A, 5B, and 6, a combination thereof, or other signals.

**[0070]** In an embodiment the CPU module 911 via the RFSG 911A, NDMC 911B, and PSG 911C may create various therapy solutions including various combinations of photonic, electrical, and mechanical (needle deployment) therapy. In a further embodiment the CPU module 911 may control the generation of photonic energy to particular modules 922I, individual or group of needle(s) 924A deployment via one or more motors 922A, and control electrical signal(s) applied to individual or group of needles 924A. Accordingly the DTA 900 may apply various therapies based on user selections via the displays 912A, user selection device 912B, and actuator 930. The CPU 911 may employ the algorithm 930 (FIG. 12) or variations thereof to control the operation of the DTA 900.

**[0071]** FIG. 9C is a simplified cross-sectional diagram of a cartridge based dermatological treatment apparatus or hand module 920 with one or more needles 924A retracted according to

various embodiments. FIG. 9D is a simplified cross-sectional diagram of a cartridge based dermatological treatment apparatus or hand module 920 with one or more needles 924A deployed according to various embodiments. The handle module 920 may include a deployable needle module (DNM) 924 and a motor and LED module (MLM) 922. In an embodiment the DLM 924 may be a releasably couplable cartridge module. In a further embodiment the DLM 924 may be a detachable cartridge module (DCM) 924 where the DCM may be changed between therapy application(s) or client(s). In a further embodiment, the DCM 924 may be disposed after usage or cleaned via an autoclave or chemical process.

**[0072]** As shown in FIGs. 9C and 9D, the MLM 922 may include one or more motors 922A, longitudinally extendable drive arms 922B, drive shaft 922C, outer casing 922D, signal interface 922E, photonic generator module 922H, and DCM 924 interface 925 (shown in FIGs. 10A to 10F). The motor(s) 922A and photonic generator module 922H may be electrically coupled to the signal interface 922E to received control signals and energy to operate one or more motors 922A and photonic devices or modules 922I of the photonic generator module 922H. The drive arm(s) 922B may be coupled to one or more drive shafts 922C so the drive shafts may be moved longitudinally to deploy and retract one or more needles 924A when the MLM 922 is operatively coupled to the DNM 924.

**[0073]** As shown in FIGs. 9C and 9D the deployable needle module 924 may include at least one deployable needle 924A, MLM connecting arm and drive coupling tabs 924B, and MLM connecting/locking arms 924C. The MLM connecting/locking arms 924C may be configured to engage and lock to DCM 924 interface 925 recesses 925D (FIG. 10F). The MLM connecting arm and drive coupling tabs 924B may be configured to disengage connecting/locking arms 924C from the MLM interface 925 when the tabs 924B are depressed inward in an embodiment (as shown in FIG. 10B). The tabs 924B may further displace drive shaft connecting arms 924D inward or centrally when the tabs 924B are depressed inwardly (as also shown in FIG. 10B). When the connecting/locking arms 924C are depressed inwardly or centrally (FIG. 9C and 9D) from an outward position (FIG. 10B). The arms 924C may engage the interface 925 recesses 925D to securely hold the DNM 924 to the MLM 922. The arms 924C may also displace the tabs 924B outwardly and cause the drive shaft connecting arms 924D to return outwardly.

**[0074]** The drive shaft connecting arms 924D may securely engage the drive shaft 922C tip 922F (FIG. 10E) recess 922G (FIG. 10E) when they return to an outward position as shown in FIG.

10D and 10E. In this configuration the DNM 924 is securely coupled to the MLM 922 via the arms 924C and 924D. In this configuration the motor(s) 922A via drive shaft(s) 922C coupled to the motor 922A shaft 922B may reliably drive one or more needles 924A of the DNM 924 (from a retracted or deployed position such as shown in FIGs. 9C and 9D, respectively). Further the motor(s) 922A may include steps or infinite drive extension 922B control to enable precise needle deployment depth or extension beyond the DNM 924 shell (924E, Fig. 10A).

**[0075]** FIG. 10A-10D are simplified, partial, cross-sectional diagrams of the DNM 924 in various stages of attachment to the MLM 922 via the arms 924C and 924D according to various embodiments. As shown in FIG. 10A the DNM or DCM 924 is decoupled from the MLM 922. The MLM 922 includes the photonic generator module (PGM) 922H, interface 925, and drive shaft tip 922F in a distal portion. As shown in FIG. 10A the PGM 922H may include one or more photon modules 922I. The photon modules 922I may be LED modules and emit photon with various frequencies and intensities based on the PSG 911C control signal.

**[0076]** As shown in FIG. 10A the DNM or DCM 924 may include the connecting arms 924C, deflecting tabs 924B, drive shaft coupling arms 924D, outer shell 924E, and one or more needles 924A. In an embodiment the drive shaft coupling arms 924D may include tabs that may securely engage the drive shaft tip 922F recess 922G. The drive shaft coupling arms 924D may be returnably deflectable inwardly (as shown in FIG. 10B) via inward depression of the tabs 924B. Such inward depression of the tabs 924B may deflect the coupling arms 924C outward. Similarly, inward depression of the coupling arms 924C to engage the interface 925 recesses 925D securely may deflect the tab arms 924B outwardly (relative the central axis of the DNM 920). Such outward movement may enable the drive shaft coupling arms 924D to return to a non-deflected state as shown in FIG. 10A.

**[0077]** In an embodiment a DNM or DCM 924 may be securely coupled to a MLM 922 by first completely compressing the arms or tabs 924B as shown in FIG. 10B. As noted above such inward compression may cause the coupling arms 924C to deflect outwardly and the drive shaft coupling arms 924D to be deflected inwardly towards each other. The drive shaft coupling arms 924D may be compressed so they may fit within the drive shaft 922C tip 922F recess 922G as the DNM or DCM 924 is advanced toward the MLM 922 distal end to securely couple the DNM 924 to the MLM 922 (as shown in FIG. 10D). After the DNM or DCM 924 is placed over the MLM 922 distal end so the drive shaft coupling arms 924D are located within the drive shaft 922C tip 922F

recess 922G and the coupling arms 924C are adjacent the MLM 922 interface 925 recesses 925D as shown in FIG. 10C.

**[0078]** To complete the coupling of a DNM 924 to the MLM 922, the coupling arms 924C may compressed inwardly as shown in FIG. 10D. The compression of the coupling arms 924C may deflect the tabs or arms 924B outwardly. Such outward deflection of the arms 924B may enable the drive shaft coupling arms 924D to return to a non-deflected state and securely engage the MLM 922 drive shaft 922C tip 922F recess 922G (as shown in FIG. 10D). In an embodiment a single coupling arm 924C, drive shaft coupling arm 924D, and tab 924B may be employed in an DNM 924. After the secure coupling of the DNM 924 to the MLM 922, the MLM 922 via the motor(s) 922A may controllable deploy one or more needles 924A as shown in FIG. 10E. FIG. 10F is a simplified cross-sectional diagram of a DNM interface 925 according to various embodiments.

**[0079]** As noted the interface 925 may include one or more recesses 925D to be securely engaged to DNM 924 coupling arms 924C. The interface 925 may also include several fenestrations or openings 925A, 925B, 925C. The central fenestration 925A may be sized to enable passage of the MLM 922 drive shaft 922C tip 922F. The fenestrations 925C may be sized and located above one or more photon modules 922I to enable photons generated by the photon modules 922I to pass into the DNM 924. In an embodiment the DNM 924 outer casing 924E may be translucent and act as a waveguide to communicate photons to the needle area of the DNM 924. The fenestrations 925B may be sized and configured to enable electrical coupling pins 924G (FIG. 11A) passage from the DNM 924 to electrical couplings of the MLM 922. The pins 924G may communicate electrical signals from the RFSG 911A to one or more needles 924A via the wires 914B and MLM 922.

**[0080]** FIG. 11A is a simplified, partial, cross-sectional diagram of DNM 924 coupled to a MLM 922 with needles 924A deployed according to various embodiments. As shown in FIG. 11A, the DNM 924 may further include electrical coupling pins 924G set with a spring loaded base 924H (in an embodiment). As noted the pins 924G may extend to electrical contacts in the MLM 922 via the interface 925 fenestrations 925B. Along a pair of pins 924G is shown, one or more pins 924G may be employed in a DNM 924 according to various embodiments. A drive shaft coupling arm 924D may include an offset 924I where the offset may be configured to engage a tab or arm 924B.

**[0081]** As shown in FIG. 11A when the needle array or assemble 924F is deployed depression of the tabs 924B inwardly will not engage the drive shaft coupling arms 924D (via the offsets 924I). Such a configuration may prevent unintentional decoupling of the DNM 924 to the

MLM 922 when the needle assembly 924F is at least partially deployed. As shown in FIG. 11A, the electrical contact pin 924G is sized to fit within the spring loaded based 924H. In an embodiment the internal spring 924M is may force extension of the pin 924G to maintain electrical conduction with the MLM 922 as the needle assembly 924F is moved (recessed and deployed to various depths). FIG. 11B is a simplified, cross-sectional diagram of a DNM 924 needle assembly 924F according to various embodiments. FIG. 11C is a simplified, cross-sectional, exploded diagram of the DNM 924 needle assembly 924F according to various embodiments. As shown in FIGs. 11B and 11C, the needle assembly 924F may include a pin cover 924J, drive arm module 924L, needles 924A, pins 924G with bases 924H, and needle printed circuit board (PCB) 924K.

**[0082]** In an embodiment the PCB 924K may couple one or more needles 924A to a first pin 924G base 924H and another one or more needles 924A to another pin 924G based 924H. The first pin 924G and second pin 924H may couple alternating rows or columns of needles 924A to form one or more dipoles between such needles 924A. The drive shaft coupling arms 924D may have a base 924L where the cover 924J includes fenestrations for the needles 924A, a recess for the PCB 924K, and an outer recess for the coupling arm base 924L (as shown assembled in FIG. 11B).

**[0083]** FIG. 12 is a flow diagram illustrating a DTA 900 processing algorithms 930 according to various embodiments. As noted the DTA 900 SGC 911 RFSG 911A, NDMC 911B, and PSG 911C may enable a user or clinician to select a variety of operational parameters to deliver a desired combination of electrical, light (photonic), and mechanical (needle) therapy to dermatological tissue. In the algorithm 930, a user may select different operational modes including cut (activities 932A to 932F), blend (activities 934A to 934F), and coagulation (activities 936A to 936F) in an embodiment. In a cut operational mode, a user may select the electrical signal intensity (activity 932B) and application time (activity 932C). The CPU 911 may determine the total energy that will be applied for each activation based on the selected intensity and time (total fluence – activity 932D). Then, upon activation (activity 932E, 932F) the DTA 900 may energize the MLM 922 based on the operational parameters.

**[0084]** In a blend operational mode (activity 934A), a user may select the electrical signal intensity, start delay, and duty cycle (activity 934B) and needle deployment depth and number of shots per activation (activity 934C). The duty cycle may include the delay before energy and need deployment, the time the energy and needles are deployed, and the subsequent off or rest time before the next possible duty cycle. As noted above the motor(s) 922A may enable precise needle

extension (effective depth) control. In an embodiment the motor(s) 922A may include a transverse motor that converts rotational force to longitudinal force. The motor may be a Haydon model number: 21H4AB-05-049 having a motor speed of about 0.005mm/msec and motor power of about 1000 Hz approximately 40N (Newton) (described in detail at www.haydonkerk.com and whose specifications are incorporated by reference).

**[0085]** The CPU 911 may determine the total energy that will be applied for each activation based on the selected intensity and duty cycle (total fluence – activity 934D). Then, upon activation (activity 934E, 934F) the DTA 900 may energize the MLM 922 based on the operational parameters and deploy the needle assembly 924F to a desired extension beyond the DNM 924 shell 924E to enable a desired depth of needle 924A penetration within tissue when the shell 924E is placed adjacent the tissue.

**[0086]** In a coagulation operational mode (activity 936A), a user may select the electrical signal intensity and start delay (activity 936B) and needle deployment depth and number of shots per activation (activity 936C). As noted above the motor(s) 922A may enable precise needle extension (effective depth) control. The CPU 911 may determine the total energy that will be applied for each activation based on the selected intensity (total fluence – activity 936D). Then, upon activation (activity 936E, 936F) the DTA 900 may energize the MLM 922 based on the operational parameters and deploy the needle assembly 924F to a desired extension beyond the DNM 924 shell 924E to enable a desired depth of needle 924A penetration within tissue when the shell 924E is placed adjacent the tissue.

**[0087]** Applications that may include the novel apparatus and systems of various embodiments include electronic circuitry used in high-speed computers, communication and signal processing circuitry, modems, single or multi-processor modules, single or multiple embedded processors, data switches, and application-specific modules, including multilayer, multi-chip modules. Such apparatus and systems may further be included as sub-components within a variety of electronic systems, such as televisions, cellular telephones, personal computers (e.g., laptop computers, desktop computers, handheld computers, tablet computers, etc.), workstations, radios, video players, audio players (e.g., mp3 players), vehicles, medical devices (e.g., heart monitor, blood pressure monitor, etc.) and others. Some embodiments may include a number of methods.

**[0088]** It may be possible to execute the activities described herein in an order other than the order described. Various activities described with respect to the methods identified herein can be executed in repetitive, serial, or parallel fashion.

**[0089]** A software program may be launched from a computer-readable medium in a computer-based system to execute functions defined in the software program. Various programming languages may be employed to create software programs designed to implement and perform the methods disclosed herein. The programs may be structured in an object-orientated format using an object-oriented language such as Java or C++. Alternatively, the programs may be structured in a procedure-orientated format using a procedural language, such as assembly or C. The software components may communicate using a number of mechanisms well known to those skilled in the art, such as application program interfaces or inter-process communication techniques, including remote procedure calls. The teachings of various embodiments are not limited to any particular programming language or environment.

**[0090]** The accompanying drawings that form a part hereof show, by way of illustration and not of limitation, specific embodiments in which the subject matter may be practiced. The embodiments illustrated are described in sufficient detail to enable those skilled in the art to practice the teachings disclosed herein. Other embodiments may be utilized and derived therefrom, such that structural and logical substitutions and changes may be made without departing from the scope of this disclosure. This Detailed Description, therefore, is not to be taken in a limiting sense, and the scope of various embodiments is defined only by the appended claims, along with the full range of equivalents to which such claims are entitled.

**[0091]** Such embodiments of the inventive subject matter may be referred to herein individually or collectively by the term "invention" merely for convenience and without intending to voluntarily limit the scope of this application to any single invention or inventive concept, if more than one is in fact disclosed. Thus, although specific embodiments have been illustrated and described herein, any arrangement calculated to achieve the same purpose may be substituted for the specific embodiments shown. This disclosure is intended to cover any and all adaptations or variations of various embodiments. Combinations of the above embodiments, and other embodiments not specifically described herein, will be apparent to those of skill in the art upon reviewing the above description.

**[0092]** The Abstract of the Disclosure is provided to comply with 37 C.F.R. §1.72(b), requiring an abstract that will allow the reader to quickly ascertain the nature of the technical disclosure. It is submitted with the understanding that it will not be used to interpret or limit the scope or meaning of the claims. In the foregoing Detailed Description, various features are grouped together in a single embodiment for the purpose of streamlining the disclosure. This method of disclosure is not to be interpreted to require more features than are expressly recited in each claim. Rather, inventive subject matter may be found in less than all features of a single disclosed embodiment. Thus the following claims are hereby incorporated into the Detailed Description, with each claim standing on its own as a separate embodiment.

## Claims

What is claimed is:

1. A method of treating dermatological tissue, comprising:

placing a device including a distal end including a plurality of extendable needles from a device distal end surface on or near dermatological tissue to be treated;

energizing a motor coupled to the extendable needles to cause at least one needle to extend a desired distance from the distal end surface; and

energizing the at least one needle via a signal generator electrically coupled to the at least one needle to cause vibration of the at least one needle.

2. The method of claim 1, further comprising placing a dermatological chemical one of on at least a portion of the dermatological tissue, at least a portion of the inner surface, and the at least one needle.

3. The method of claim 1, wherein the device further includes a proximal handle and a releasably couplable deployable needle assembly, the extendable needles located in the needle assembly.

4. The method of claim 3, wherein the proximal handle includes the needle deploying motor.

5. The method of claim 4, wherein the proximal handle further includes at least one embedded LED therein and further including energizing the LED when the signal generator is energized.

6. The method of claim 5, comprising energizing the LED to generate one of a blue and an infra-red photonic signal.

7. The method of claim 4, wherein the needle deploying motor is coupled the needle assembly via a drive shaft.

8. The method of claim 5, wherein the releasably couplable deployable needle assembly includes a translucent section to communicate the photon signal to the at least one needle.

9. The method of claim 3, further comprising employing an RF signal generator electrically coupled to the at least one needle to generate a signal that causes vibration of the at least one needle.

10. The method of claim 3, wherein tissue penetration by the at least one needle creates a micro-wound and further comprising employing an RF signal generator electrically coupled to the at least one needle to generate a signal that causes vibration of the at least one needle sufficient to increase the tissue micro-wound.

11. An apparatus for treating dermatological tissue, comprising:

a device including a distal end and a plurality of extendable needles, at least one needle extendable from the device distal end surface;

a motor coupled to at least one needle that causes the at least one needle to extend a desired distance from the distal end surface when energized with a particular signal; and

a signal generator electrically coupled to the at least one needle to cause vibration of the at least one needle when the at least one needle energized with a particular signal.

12. The apparatus of claim 11, wherein the device includes a proximal end couplable to the signal generator.

13. The apparatus of claim 11, wherein the device further includes a proximal handle and a releasably couplable deployable needle assembly, the extendable needles located in the needle assembly.

14. The apparatus of claim 12, wherein the proximal handle includes the motor.

15. The apparatus of claim 14, wherein the proximal handle further includes at least one embedded LED therein and further including a photonic signal generator electrically coupled to the least one embedded LED.

16. The apparatus of claim 15, wherein the at least one embedded LED generates one of a blue and an infra-red photonic signal.

17. The apparatus of claim 14, further comprising a drive shaft coupling the motor to the at least one needle.

18. The apparatus of claim 15, wherein the releasably couplable deployable needle assembly includes a translucent section that communicates photon signals.

19. The apparatus of claim 13, further comprising an RF signal generator electrically coupled to the at least one needle, the RF signal generator causing vibration of the at least one needle when the needle is energized with a particular signal.

20. The apparatus of claim 13, wherein tissue penetration by the at least one needle creates a micro-wound and further comprising an RF signal generator electrically coupled to the at least one needle, the RF signal generator causing vibration of the at least one needle when the needle is energized with a particular signal sufficient to increase the tissue micro-wound.

METHOD, SYSTEM, AND APPARATUS FOR DERMATOLOGICAL TREATMENT

## Abstract of the Disclosure

Embodiments of dermatological cell treatment are described generally herein. Other embodiments may be described and claimed.

**IN THE UNITED STATES PATENT AND TRADEMARK OFFICE**

| | |
|---|---|
| Applicant(s):<br>Na<br><br>Application No.: not yet assigned<br><br>Filed: Herewith<br><br>Title: METHOD, SYSTEM, AND APPARATUS FOR DERMATOLOGICAL TREATMENT<br><br>Attorney Docket No.: NA001KR_US2 | Art Unit: Unknown<br><br>Examiner: Unknown |

PRELIMINARY AMENDMENT UNDER 37 CFR 1.115

Commissioner for Patents
P.O. Box 1450
Alexandria, VA 22313-1450

Dear Sir:

Please amend this application as follows, where amendments to specification start on page 2, claims on page 10, and drawings on page 14 and remarks start on page 15:

In the Title:

METHOD, SYSTEM, AND APPARATUS FOR ~~DERMALOGICAL~~ DERMATOLOGICAL TREATMENT

In the Specification:

Please amend paragraph 0001 as shown:

The present application is a continuation of US Application Number 13/825,083, entitled "METHOD, SYSTEM, AND APPARATUS FOR DERMATOLOGICAL TREATMENT", Attorney Docket No. NA001KR_US filed on January 20, 2014, which a National Stage entry of PCT/KR2012/001335, filed on February 22, 2012, which claims priority to US Application Number 61/449,080, entitled "METHOD, SYSTEM, AND APPARATUS FOR DERMATOLOGICAL TREATMENT", Attorney Docket No. NA001US1 filed on March 3, 2011 and US Application Number 13/060,274, Patent No. 8979912, entitled "METHOD, SYSTEM, AND APPARATUS FOR DERMATOLOGICAL TREATMENT", Attorney Docket No. NA001US filed on February 22, 2011, which is a National Stage entry of PCT Application Number PCT/US2008/074131, entitled "METHOD, SYSTEM, AND APPARATUS FOR DERMATOLOGICAL TREATMENT", Attorney Docket No. NA001PCT filed on August 22, 2008, which claims ~~the benefit of~~ priority to Republic of Korea Application Number 10-2008-0076993, entitled "Electrical system, skin, skin care and cosmetic electricity," filed on August 6, 2008~~, PCT Application Number PCT/US2008/074131, entitled "METHOD, SYSTEM, AND APPARATUS FOR~~ DERMATOLOGICAL ~~TREATMENT", Attorney Docket No. NA001PCT filed on August 22, 2008, and US Application Number 13/060,274, entitled "METHOD, SYSTEM, AND APPARATUS FOR~~ DERMATOLOGICAL ~~TREATMENT", Attorney Docket No. NA001US filed on February 22, 2011~~, the entirety of each is incorporated by reference.

In paragraph 0035:

In an embodiment the plate may include about 140 pins or needles 230 uniformly separated. Each needle may be about 0.1 to 0.4 mm in diameter and 0.2 mm to 1.4 mm in length including 0.3 mm diameter and 0.8 mm in length in an embodiment. The elastic section or layer 270 may be comprised of a combination of elastomeric materials and non-elastomeric materials. The elastomeric materials may include plastics, rubber (synthetic or natural), and spring(s). The pin section ~~230~~ 250 may be coupled directly or indirectly to the upper section 290 via the elastic section ~~250~~ 270, including via glues, screws, welds, or other connection. In an embodiment the pin section 250 may include elastomers to enable at least partial deformation of the pin section 250 about the pins 230.

In paragraph 0043:

In an embodiment the plate may include about 140 pins or needles 351 uniformly separated. Each needle may be about 0.1 to 0.4 mm in diameter and 0.2 mm to 1.4 mm in length including 0.3 mm diameter and 0.8 mm in length in an embodiment. The elastic section or layer 355 may be comprised of a combination of elastomeric materials and non-elastomeric materials. The elastomeric materials may include plastics, rubber (synthetic or natural), and spring(s). The pin section 353 may be coupled directly or indirectly to the upper section 357 via the elastic section ~~353~~ 355, including via glues, screws, welds, or other connection. In an embodiment the pin section 353 may include elastomers to enable at least partial deformation of the pin section 353 about the pins 351.

In paragraph 0044:

FIGS. 3A and 3B are simplified isometric diagrams of acupuncture apparatus 400, 460 including at least one pin 451 that may be coupled to an electrical signal via an internal wire 458. Each apparatus 400, 460 includes curved roller 450 having a plurality of acupuncture pins 451 where the pins 451 may be similar to pins 351. In apparatus 400, the electrical lead wire ~~400A~~ 300A may be coupled to an electrical interface 410 in the apparatus handle 430 where the interface 410 is electrically coupled to the internal wire 458. In apparatus 460, the handle 430 may include a signal generator 470 similar to generator 370, switch 475, and conduction surface 490. Apparatus 460 may operate similar to apparatus 360 in operation other than the rolling capability of the apparatus 460, 400. In an embodiment the rollers 450 may have various configurations to conform to a dermal area to be treated.

In paragraph 0047:

In an embodiment the local controller 54 and battery 52 may also be embedded in the upper section 290, 357, pin section 230, 351, or the handle 220, 330, or separately between these sections. The controller 54 may be electrically coupled to the one or more ~~LEDS~~ LEDs 32A, 32B. The controller 54 may also be coupled to a battery 52. The controller 54 may generate one or more signals for LEDs 32A, 32B as a function of a user switch 75, 56. The signals may vary as a function of the first and second frequency ranges. The controller 54 may include one or more timers 58 that may limit the application of energy to the LEDs 32A, 32B to predetermined time intervals. In an embodiment the controller may also be coupled to an antenna ~~56~~ 104 to receive or transmit one or more signals related to the transmission of energy to one or more LEDs 32A, 32B. In an embodiment the system 10 may be configured to treat a particular segment of dermatological cells such as a face. The apparatus 10 may be configured to conform to a user's anatomy so that emitted light is focused on dermatological cells. In another embodiment 200, the system 200 may be configured to treat another anatomical region including dermatological cells on an arm, leg, chest, hands, feet, neck, or other region.

In paragraph 0048:

In an embodiment 510 shown in FIG. 4B, a controller 54, an antenna 104, and a power source 60 may be located ~~in~~ external to the apparatus 10, 320, 360. The power source 60 may be coupled to the controller 54. The controller 54 may be coupled to one or more LEDs 32A, 32B via one or more electric wires 106. The controller 54 may generate one or more signals for LEDs 32A, 32B as a function of the user switch 56. The signals may vary as a function of the first and second frequency ranges. The controller 54 may include one or more timers 58 that may limit the application of energy to the LEDs 32A, 32B to predetermined time intervals. In an embodiment the controller may also be coupled to an antenna 104 to receive or transmit one or more signals related to the transmission of energy to one or more LEDs 32A, 32B.

In paragraph 0049:

As shown in Fig. 4C, in ~~In~~ any of the above apparatus 10, 320, 350, 360, 400, 460, the plate or roller 200, 350, 450 may include a plurality of embedded LED lens 536, a fiber optic pathway 534, and an LED 532. In this embodiment, system 530 ~~the~~ LED 532 shown in FIG. 4C may be coupled to lens 536 via the fiber optic pathway 534. The controller 540 may generate an LED signal via the LED 532 that is transmitted to dermatological cells via the lens 536 and the fiber optic pathway 534.

In paragraph 0069:

The NDMC 911B may control the deployment of one or more needles 924A of a deployable needle module 924 (FIG. 9C) based on one or more user selected operational parameters. The parameters may determine the depth and duty cycle related to the needle(s) 924A deployment in an embodiment. The signals generated by the NDMC 911B to control needle deployment may vary as a function of motor(s) (922A, FIG. 9C) employed to drive one or more needles 924A. As described above an electrical signal may also be applied to the needle(s) 924A to cause vibration of the needles or enable cutting, blending, and coagulation of the tissue in which the needles 924A are deployed. The RFSG 911A may generate one or more electrical signals to be applied to one or more needles 924A based on the selected operational parameters. An electrical signal may be applied to a single needle 924A, group of needles 924A (mono-polar configuration) or pair(s) of needles 924A (bipolar configuration) in an embodiment. In an embodiment the RFSG 911A may apply signals 650, 630, 640, 670 shown in FIGs. 5A, 5B, and 6, a combination thereof, or other signals.

In paragraph 0073:

As shown in FIGs. 9C and 9D the deployable needle module 924 may include at least one deployable needle 924A, MLM connecting arm and drive coupling tabs 924B, and MLM connecting/locking arms 924C. The MLM connecting/locking arms 924C may be configured to engage and lock to DCM 924 interface 925 recesses 925D (FIG. 10F). The MLM connecting arm and drive coupling tabs 924B may be configured to disengage connecting/locking arms 924C from the MLM interface 925 when the tabs 924B are depressed inward in an embodiment (as shown in FIG. 10B). The tabs 924B may further displace drive shaft connecting arms 924D (FIG. 10A) inward or centrally when the tabs 924B are depressed inwardly (as also shown in FIG. 10B). When the connecting/locking arms 924C are depressed inwardly or centrally (FIG. 9C and 9D) from an outward position (FIG. 10B). The arms 924C may engage the interface 925 recesses 925D to securely hold the DNM 924 to the MLM 922. The arms 924C may also displace the tabs 924B outwardly and cause the drive shaft connecting arms 924D to return outwardly.

In paragraph 0078:

To complete the coupling of a DNM 924 to the MLM 922, the coupling arms 924C may compressed inwardly as shown in FIG. 10D. The compression of the coupling arms 924C may deflect the tabs or arms 924B outwardly. Such outward deflection of the arms 924B may enable the drive shaft coupling arms 924D to return to a non-deflected state and securely engage the MLM 922 drive shaft 922C tip 922F recess 922G (as shown in FIG. 10D). In an embodiment a single coupling arm 924C, drive shaft coupling arm 924D, and tab 924B may be employed in an DNM 924. After the secure coupling of the DNM 924 to the MLM 922, the MLM 922 via the motor(s) 922A may ~~controllable~~ controllably deploy one or more needles 924A as shown in FIG. 10E. FIG. 10F is a simplified cross-sectional diagram of a DNM interface 925 according to various embodiments.

In paragraph 0079:

As noted the interface 925 may include one or more recesses 925D to be securely engaged to DNM 924 coupling arms 924C. The interface 925 may also include several fenestrations or openings 925A, 925B, 925C (FIG. 10F). The central fenestration 925A may be sized to enable passage of the MLM 922 drive shaft 922C tip 922F. The fenestrations 925C may be sized and located above one or more photon modules 922I to enable photons generated by the photon modules 922I to pass into the DNM 924. In an embodiment the DNM 924 outer casing 924E may be translucent and act as a waveguide to communicate photons to the needle area of the DNM 924. The fenestrations 925B may be sized and configured to enable electrical coupling pins 924G (FIG. 11A) passage from the DNM 924 to electrical couplings of the MLM 922. The pins 924G may communicate electrical signals from the RFSG 911A to one or more needles 924A via the wires 914B and MLM 922.

In paragraph 0080:

FIG. 11A is a simplified, partial, cross-sectional diagram of DNM 924 coupled to a MLM 922 with needles 924A deployed according to various embodiments. As shown in FIG. 11A, the DNM 924 may further include electrical coupling pins 924G set with a spring loaded base 924H (in an embodiment). As noted the pins 924G may extend to electrical contacts in the MLM 922 via the interface 925 fenestrations 925B. ~~Along~~ Although a pair of pins 924G is shown, one or more pins 924G may be employed in a DNM 924 according to various embodiments. A drive shaft coupling arm 924D may include an offset 924I where the offset may be configured to engage a tab or arm 924B.

In paragraph 0081:

As shown in FIG. 11A when the needle array or assemble 924F is deployed depression of the tabs 924B inwardly will not engage the drive shaft coupling arms 924D (via the offsets 924I). Such a configuration may prevent unintentional decoupling of the DNM 924 to the MLM 922 when the needle assembly 924F is at least partially deployed. As shown in FIG. 11A, the electrical contact pin 924G is sized to fit within the spring loaded based 924H. In an embodiment the internal spring 924M ~~is~~ (FIG. 11C) may force extension of the pin 924G to maintain electrical conduction with the MLM 922 as the needle assembly 924F is moved (recessed and deployed to various depths). FIG. 11B is a simplified, cross-sectional diagram of a DNM 924 needle assembly 924F according to various embodiments. FIG. 11C is a simplified, cross-sectional, exploded diagram of the DNM 924 needle assembly 924F according to various embodiments. As shown in FIGs. 11B and 11C, the needle assembly 924F may include a pin cover 924J, drive arm module 924L, needles 924A, pins 924G with bases 924H, and needle printed circuit board (PCB) 924K.

In paragraph 0084:

In a blend operational mode (activity 934A), a user may select the electrical signal intensity, start delay, and duty cycle (activity 934B) and needle deployment depth and number of shots per activation (activity 934C). The duty cycle may include the delay before energy and ~~need~~ needle deployment, the time the energy and needles are deployed, and the subsequent off or rest time before the next possible duty cycle. As noted above the motor(s) 922A may enable precise needle extension (effective depth) control. In an embodiment the motor(s) 922A may include a transverse motor that converts rotational force to longitudinal force. The motor may be a Haydon model number: 21H4AB-05-049 having a motor speed of about 0.005mm/msec and motor power of about 1000 Hz approximately 40N (Newton) (described in detail at www.haydonkerk.com and whose specifications are incorporated by reference).

In the claims:

1. (Cancelled).
2. (Cancelled).
3. (Cancelled).
4. (Cancelled).
5. (Cancelled).
6. (Cancelled).
7. (Cancelled).
8. (Cancelled).
9. (Cancelled).
10. (Cancelled).
11. (Cancelled).
12. (Cancelled).
13. (Cancelled).
14. (Cancelled).
15. (Cancelled).
16. (Cancelled).
17. (Cancelled).
18. (Cancelled).
19. (Cancelled).
20. (Cancelled).

21. (Newly Added) A method of treating dermatological tissue, comprising:

placing a device surface on or near dermatological tissue to be treated, the surface including a plurality of needles one of extending or extendable a desired distance from the surface; and

directing a signal generator electrically coupled to the plurality of extended needles to produce pulsed radio frequency signals across the plurality of needles to affect dermatological tissue near the plurality of needles.

22. (Newly Added) The method of treating dermatological tissue of claim 21, including placing a device end surface on or near dermatological tissue to be treated, the end surface including a plurality of needles extendable a desired distance from the end surface.

23. (Newly Added) The method of treating dermatological tissue of claim 22, further including causing the plurality of the extendable needles to extend a desired distance from the end surface.

24. (Newly Added) The method of treating dermatological tissue of claim 22, further including energizing a motor coupled to the plurality of extendable needles to cause the plurality of the extendable needles to extend a desired distance from the end surface.

25. (Newly Added) The method of treating dermatological tissue of claim 21, including placing a device inner surface on or near dermatological tissue to be treated, the inner surface including a plurality of needles extending a desired distance from the inner surface.

26. (Newly Added) The method of treating dermatological tissue of claim 21, including placing a device inner surface on or near dermatological tissue to be treated, the inner surface including a plurality of needles extending a desired distance from the inner surface with a force sufficient to cause the plurality of needles to penetrate the dermatological tissue.

27. (Newly Added) The method of treating dermatological tissue of claim 21, including directing a signal generator electrically coupled to the plurality of needles to produce pulsed radio frequency signals across the plurality of needles to form a bipolar pair.

28. (Newly Added) The method of treating dermatological tissue of claim 21, including directing a signal generator electrically coupled to the plurality of needles to produce pulsed radio frequency signals across the plurality of needles, the plurality of needles to form a bipolar pair and affect dermatological tissue near the bipolar pair.

29. (Newly Added) The method of treating dermatological tissue of claim 21, including directing the signal generator to produce periodic pulsed radio frequency signals across the plurality of needles for a predetermined time interval, each pulse having a width.

30. (Newly Added) The method of treating dermatological tissue of claim 27, wherein the predetermined time interval is about 100ms to 500ms and the pulse width is about 100 microseconds to 500 microseconds.

31. (Newly Added) An apparatus for treating dermatological tissue, comprising:

a device including a plurality of needles one of extending or extendable a desired distance from a surface, the desired distance selected to enable the plurality of needles to penetrate dermatological tissue; and

a signal generator electrically coupled to the plurality of extended needles to produce pulsed radio frequency signals across the plurality of needles to affect dermatological tissue near the plurality of needles.

32. (Newly Added) The apparatus for treating dermatological tissue of claim 31, wherein the device includes an end surface configured to be placed on or near dermatological tissue to be treated, the end surface including a plurality of needles extendable a desired distance from the end surface.

33. (Newly Added) The apparatus for treating dermatological tissue of claim 32, further including a mechanism for causing the plurality of the extendable needles to extend a desired distance from the end surface.

34. (Newly Added) The apparatus for treating dermatological tissue of claim 32, further including a motor coupled to the plurality of extendable needles that may be directed to cause the plurality of the extendable needles to extend a desired distance from the end surface.

35. (Newly Added) The apparatus for treating dermatological tissue of claim 31, wherein the device includes an inner surface including a plurality of needles extending a desired distance from the inner surface.

36. (Newly Added) The apparatus for treating dermatological tissue of claim 31, wherein the signal generator produces pulsed radio frequency signals across the plurality of needles to form a bipolar pair.

37. (Newly Added) The apparatus for treating dermatological tissue of claim 31, wherein the signal generator produces pulsed radio frequency signals across the plurality of needles to form a bipolar pair and affect dermatological tissue near the bipolar pair.

38. (Newly Added) The apparatus for treating dermatological tissue of claim 31, wherein the signal generator produces periodic pulsed radio frequency signals across the plurality of needles for a predetermined time interval, each pulse having a width.

39. (Newly Added) The apparatus for treating dermatological tissue of claim 38, wherein the predetermined time interval is about 100ms to 500ms.

40. (Newly Added) The apparatus for treating dermatological tissue of claim 38, wherein the pulse width is about 100 microseconds to 500 microseconds.

In the drawings:

Please replace pages 8 and 20 of the drawings with attached replacement pages. In the drawings, FIG. 4A reference 56 has been changed to 104. In FIG. 11 springs (reference 924M) has been added. Support for the spring addition is present in paragraph 0081 of the specification as filed.

## REMARKS

Claims 1-20 were pending. Claims 1-20 have been cancelled and claims 21-40 added. Upon entry of this preliminary amendment, claims 21-40 will be pending. Entry of this preliminary amendment is respectfully requested. Applicant has also amended the specification to correct minor grammatical or reference errors and replaced two drawings to correct errors. No new matter has been added. Entry of the preliminary amendments is respectfully requested.

.

Respectfully Submitted,

4/12/2016 /mwresq/_____
Date Merle Richman
Patent Attorney
Reg. No. 38282

Merle Richman
Patent Attorney
Customer ID - 26338
PO Box 3333
La Jolla, CA 92038-3333

Tel. 858 551-2030

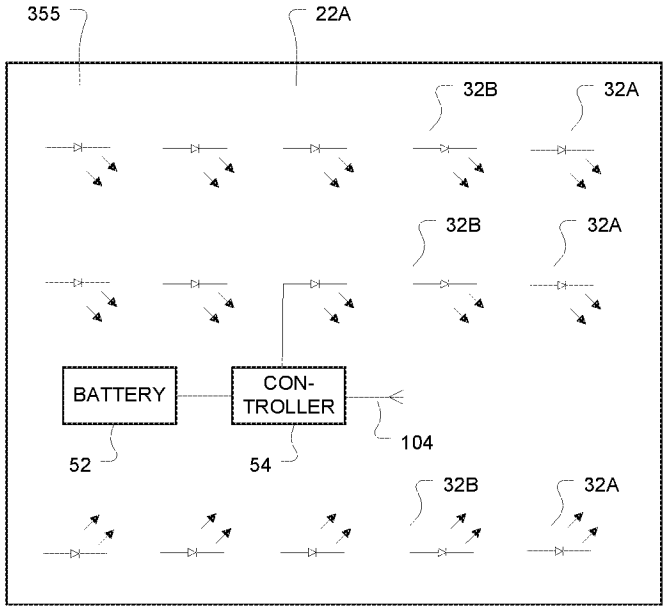


FIGURE 4A 520

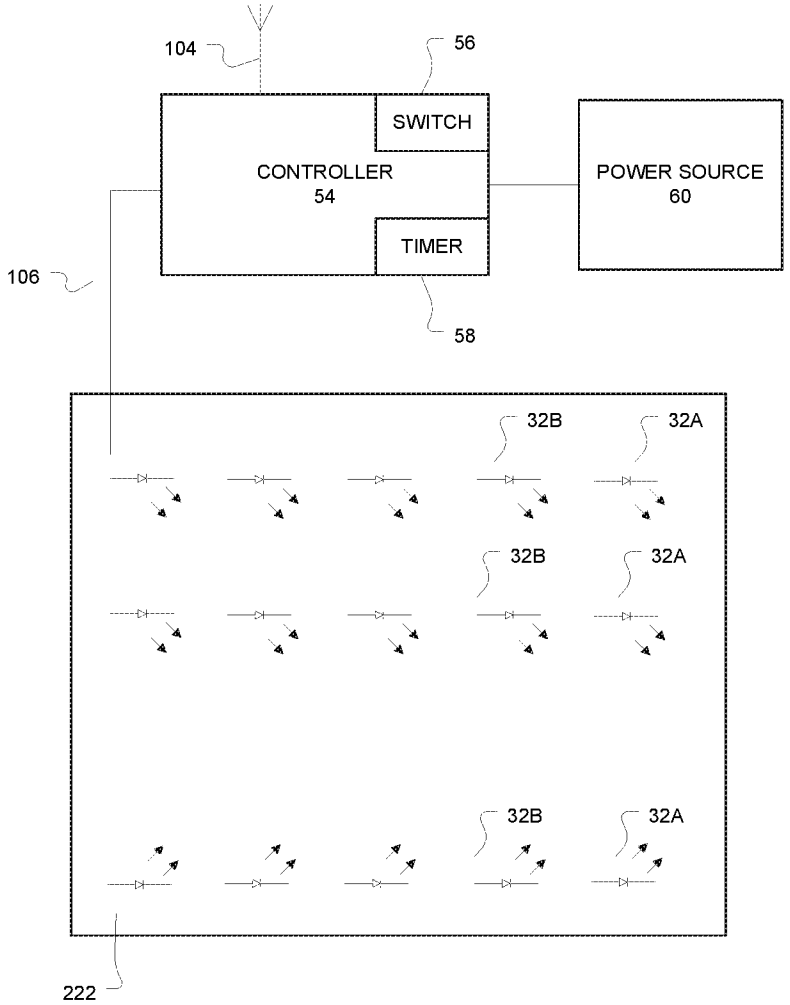


FIGURE 4B 510

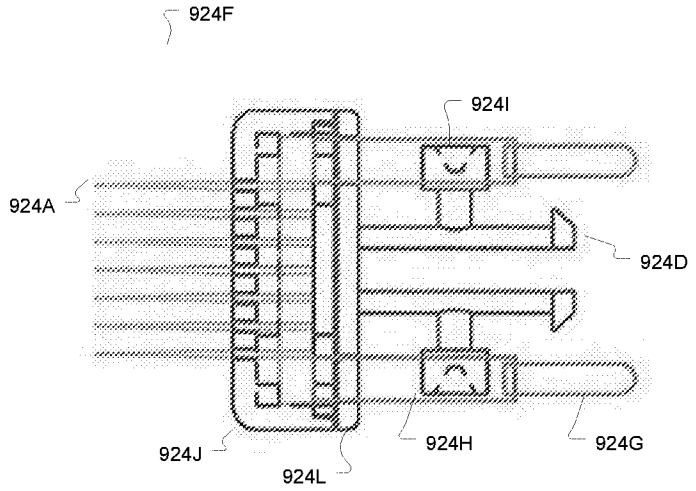


FIGURE 11B

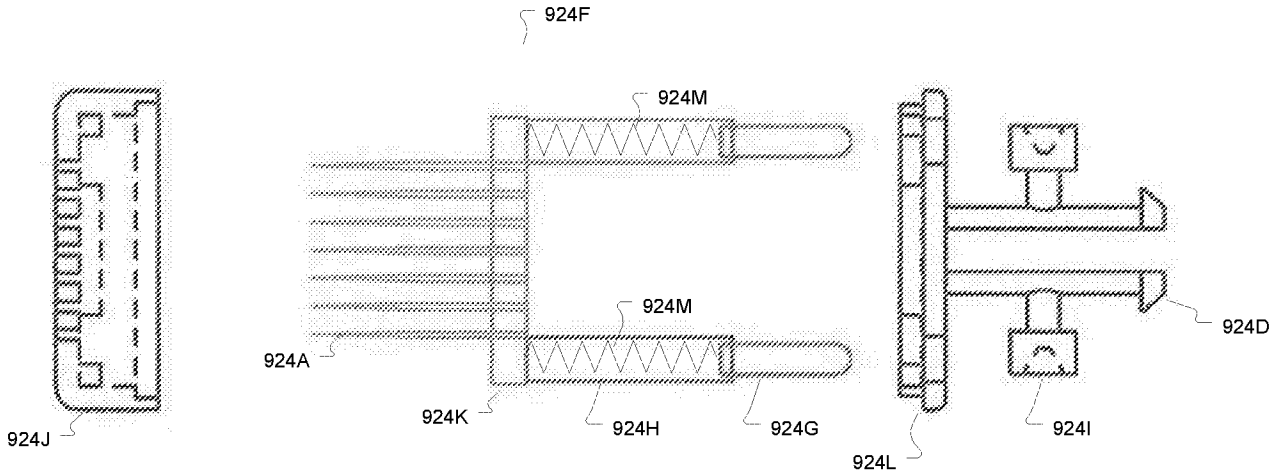


FIGURE 11C

UNITED STATES PATENT AND TRADEMARK OFFICE

UNITED STATES DEPARTMENT OF COMMERCE
United States Patent and Trademark Office
Address: COMMISSIONER FOR PATENTS
P.O. Box 1450
Alexandria, Virginia 22313-1450
www.uspto.gov

| APPLICATION NUMBER | FILING or 371(c) DATE | GRP ART UNIT | FIL FEE REC'D | ATTY.DOCKET.NO | TOT CLAIMS | IND CLAIMS |
|---|---|---|---|---|---|---|
| 15/096,686 | 04/12/2016 | 3769 | 0.00 | NA001KR_US2 | 20 | 2 |

**CONFIRMATION NO. 2620**

26338
MERLE W. RICHMAN, III
P.O. BOX 3333
LA JOLLA, CA 92038

**FILING RECEIPT**

OC000000082491835

Date Mailed: 04/28/2016

Receipt is acknowledged of this non-provisional patent application. The application will be taken up for examination in due course. Applicant will be notified as to the results of the examination. Any correspondence concerning the application must include the following identification information: the U.S. APPLICATION NUMBER, FILING DATE, NAME OF APPLICANT, and TITLE OF INVENTION. Fees transmitted by check or draft are subject to collection. Please verify the accuracy of the data presented on this receipt. **If an error is noted on this Filing Receipt, please submit a written request for a Filing Receipt Correction. Please provide a copy of this Filing Receipt with the changes noted thereon. If you received a "Notice to File Missing Parts" for this application, please submit any corrections to this Filing Receipt with your reply to the Notice. When the USPTO processes the reply to the Notice, the USPTO will generate another Filing Receipt incorporating the requested corrections**

**Inventor(s)**

Jongju Na, Songpa-Gu, KOREA, REPUBLIC OF;

**Applicant(s)**

Jongju Na, Songpa-Gu, KOREA, REPUBLIC OF;

**Power of Attorney:** None

**Domestic Priority data as claimed by applicant**

This application is a CON of 13/825,083 01/20/2014 PAT 9320536 *
which is a 371 of PCT/KR2012/001335 02/22/2012
which claims benefit of 61/449,080 03/03/2011
and is a CON of 13/060,274 03/30/2011 PAT 8979912 *
which is a 371 of PCT/US08/74131 08/22/2008
(*)Data provided by applicant is not consistent with PTO records.

**Foreign Applications** (You may be eligible to benefit from the **Patent Prosecution Highway** program at the USPTO. Please see http://www.uspto.gov for more information.)
REPUBLIC OF KOREA 10-2008-0076993 08/06/2008

**Permission to Access Application via Priority Document Exchange:** Yes

**Permission to Access Search Results:** No

Applicant may provide or rescind an authorization for access using Form PTO/SB/39 or Form PTO/SB/69 as appropriate.

Request to Retrieve - This application either claims priority to one or more applications filed in an intellectual property Office that participates in the Priority Document Exchange (PDX) program or contains a proper **Request to Retrieve Electronic Priority Application(s)** (PTO/SB/38 or its equivalent). Consequently, the USPTO will attempt to electronically retrieve these priority documents.

**If Required, Foreign Filing License Granted:** 04/27/2016
The country code and number of your priority application, to be used for filing abroad under the Paris Convention, is **US 15/096,686**
**Projected Publication Date:** To Be Determined - pending completion of Missing Parts
**Non-Publication Request:** No
**Early Publication Request:** No
**** SMALL ENTITY ****
**Title**

Method, system, and apparatus for dermatological treatment

**Preliminary Class**

606

**Statement under 37 CFR 1.55 or 1.78 for AIA (First Inventor to File) Transition Applications:** Yes

## PROTECTING YOUR INVENTION OUTSIDE THE UNITED STATES

Since the rights granted by a U.S. patent extend only throughout the territory of the United States and have no effect in a foreign country, an inventor who wishes patent protection in another country must apply for a patent in a specific country or in regional patent offices. Applicants may wish to consider the filing of an international application under the Patent Cooperation Treaty (PCT). An international (PCT) application generally has the same effect as a regular national patent application in each PCT-member country. The PCT process **simplifies** the filing of patent applications on the same invention in member countries, but **does not result** in a grant of "an international patent" and does not eliminate the need of applicants to file additional documents and fees in countries where patent protection is desired.

Almost every country has its own patent law, and a person desiring a patent in a particular country must make an application for patent in that country in accordance with its particular laws. Since the laws of many countries differ in various respects from the patent law of the United States, applicants are advised to seek guidance from specific foreign countries to ensure that patent rights are not lost prematurely.

Applicants also are advised that in the case of inventions made in the United States, the Director of the USPTO must issue a license before applicants can apply for a patent in a foreign country. The filing of a U.S. patent application serves as a request for a foreign filing license. The application's filing receipt contains further information and guidance as to the status of applicant's license for foreign filing.

Applicants may wish to consult the USPTO booklet, "General Information Concerning Patents" (specifically, the section entitled "Treaties and Foreign Patents") for more information on timeframes and deadlines for filing foreign patent applications. The guide is available either by contacting the USPTO Contact Center at 800-786-9199, or it can be viewed on the USPTO website at http://www.uspto.gov/web/offices/pac/doc/general/index.html.

For information on preventing theft of your intellectual property (patents, trademarks and copyrights), you may wish to consult the U.S. Government website, http://www.stopfakes.gov. Part of a Department of Commerce initiative, this website includes self-help "toolkits" giving innovators guidance on how to protect intellectual property in specific

countries such as China, Korea and Mexico. For questions regarding patent enforcement issues, applicants may call the U.S. Government hotline at 1-866-999-HALT (1-866-999-4258).

## LICENSE FOR FOREIGN FILING UNDER

## Title 35, United States Code, Section 184

## Title 37, Code of Federal Regulations, 5.11 & 5.15

**GRANTED**

The applicant has been granted a license under 35 U.S.C. 184, if the phrase "IF REQUIRED, FOREIGN FILING LICENSE GRANTED" followed by a date appears on this form. Such licenses are issued in all applications where the conditions for issuance of a license have been met, regardless of whether or not a license may be required as set forth in 37 CFR 5.15. The scope and limitations of this license are set forth in 37 CFR 5.15(a) unless an earlier license has been issued under 37 CFR 5.15(b). The license is subject to revocation upon written notification. The date indicated is the effective date of the license, unless an earlier license of similar scope has been granted under 37 CFR 5.13 or 5.14.

This license is to be retained by the licensee and may be used at any time on or after the effective date thereof unless it is revoked. This license is automatically transferred to any related applications(s) filed under 37 CFR 1.53(d). This license is not retroactive.

The grant of a license does not in any way lessen the responsibility of a licensee for the security of the subject matter as imposed by any Government contract or the provisions of existing laws relating to espionage and the national security or the export of technical data. Licensees should apprise themselves of current regulations especially with respect to certain countries, of other agencies, particularly the Office of Defense Trade Controls, Department of State (with respect to Arms, Munitions and Implements of War (22 CFR 121-128)); the Bureau of Industry and Security, Department of Commerce (15 CFR parts 730-774); the Office of Foreign AssetsControl, Department of Treasury (31 CFR Parts 500+) and the Department of Energy.

**NOT GRANTED**

No license under 35 U.S.C. 184 has been granted at this time, if the phrase "IF REQUIRED, FOREIGN FILING LICENSE GRANTED" DOES NOT appear on this form. Applicant may still petition for a license under 37 CFR 5.12, if a license is desired before the expiration of 6 months from the filing date of the application. If 6 months has lapsed from the filing date of this application and the licensee has not received any indication of a secrecy order under 35 U.S.C. 181, the licensee may foreign file the application pursuant to 37 CFR 5.15(b).

---

## *SelectUSA*

The United States represents the largest, most dynamic marketplace in the world and is an unparalleled location for business investment, innovation, and commercialization of new technologies. The U.S. offers tremendous resources and advantages for those who invest and manufacture goods here. Through SelectUSA, our nation works to promote and facilitate business investment. SelectUSA provides information assistance to the international investor community; serves as an ombudsman for existing and potential investors; advocates on behalf of U.S. cities, states, and regions competing for global investment; and counsels U.S. economic development organizations on investment attraction best practices. To learn more about why the United States is the best country in the world to develop

technology, manufacture products, deliver services, and grow your business, visit http://www.SelectUSA.gov or call +1-202-482-6800.

# PATENT APPLICATION FEE DETERMINATION RECORD

Substitute for Form PTO-875

Application or Docket Number: 15/096,686

## APPLICATION AS FILED - PART I

| FOR | (Column 1) NUMBER FILED | (Column 2) NUMBER EXTRA | SMALL ENTITY RATE($) | SMALL ENTITY FEE($) | OR | OTHER THAN SMALL ENTITY RATE($) | OTHER THAN SMALL ENTITY FEE($) |
|---|---|---|---|---|---|---|---|
| BASIC FEE (37 CFR 1.16(a), (b), or (c)) | N/A | N/A | N/A | 70 | | N/A | |
| SEARCH FEE (37 CFR 1.16(k), (i), or (m)) | N/A | N/A | N/A | 300 | | N/A | |
| EXAMINATION FEE (37 CFR 1.16(o), (p), or (q)) | N/A | N/A | N/A | 360 | | N/A | |
| TOTAL CLAIMS (37 CFR 1.16(i)) | 20 minus 20 = | * | x 40 = | 0.00 | OR | | |
| INDEPENDENT CLAIMS (37 CFR 1.16(h)) | 2 minus 3 = | * | x 210 = | 0.00 | | | |
| APPLICATION SIZE FEE (37 CFR 1.16(s)) | If the specification and drawings exceed 100 sheets of paper, the application size fee due is $310 ($155 for small entity) for each additional 50 sheets or fraction thereof. See 35 U.S.C. 41(a)(1)(G) and 37 CFR 1.16(s). | | | 0.00 | | | |
| MULTIPLE DEPENDENT CLAIM PRESENT (37 CFR 1.16(j)) | | | | 0.00 | | | |
| * If the difference in column 1 is less than zero, enter "0" in column 2. | | | TOTAL | 730 | | TOTAL | |

## APPLICATION AS AMENDED - PART II

### AMENDMENT A

| | (Column 1) CLAIMS REMAINING AFTER AMENDMENT | | (Column 2) HIGHEST NUMBER PREVIOUSLY PAID FOR | (Column 3) PRESENT EXTRA | SMALL ENTITY RATE($) | SMALL ENTITY ADDITIONAL FEE($) | OR | OTHER THAN SMALL ENTITY RATE($) | OTHER THAN SMALL ENTITY ADDITIONAL FEE($) |
|---|---|---|---|---|---|---|---|---|---|
| Total (37 CFR 1.16(i)) | * | Minus | ** | = | x = | | OR | x = | |
| Independent (37 CFR 1.16(h)) | * | Minus | *** | = | x = | | OR | x = | |
| Application Size Fee (37 CFR 1.16(s)) | | | | | | | | | |
| FIRST PRESENTATION OF MULTIPLE DEPENDENT CLAIM (37 CFR 1.16(j)) | | | | | | | OR | | |
| | | | | | TOTAL ADD'L FEE | | OR | TOTAL ADD'L FEE | |

### AMENDMENT B

| | (Column 1) CLAIMS REMAINING AFTER AMENDMENT | | (Column 2) HIGHEST NUMBER PREVIOUSLY PAID FOR | (Column 3) PRESENT EXTRA | RATE($) | ADDITIONAL FEE($) | | RATE($) | ADDITIONAL FEE($) |
|---|---|---|---|---|---|---|---|---|---|
| Total (37 CFR 1.16(i)) | * | Minus | ** | = | x = | | OR | x = | |
| Independent (37 CFR 1.16(h)) | * | Minus | *** | = | x = | | OR | x = | |
| Application Size Fee (37 CFR 1.16(s)) | | | | | | | | | |
| FIRST PRESENTATION OF MULTIPLE DEPENDENT CLAIM (37 CFR 1.16(j)) | | | | | | | OR | | |
| | | | | | TOTAL ADD'L FEE | | OR | TOTAL ADD'L FEE | |

* If the entry in column 1 is less than the entry in column 2, write "0" in column 3.

** If the "Highest Number Previously Paid For" IN THIS SPACE is less than 20, enter "20".

*** If the "Highest Number Previously Paid For" IN THIS SPACE is less than 3, enter "3".

The "Highest Number Previously Paid For" (Total or Independent) is the highest found in the appropriate box in column 1.

UNITED STATES PATENT AND TRADEMARK OFFICE

UNITED STATES DEPARTMENT OF COMMERCE
United States Patent and Trademark Office
Address: COMMISSIONER FOR PATENTS
P.O. Box 1450
Alexandria, Virginia 22313-1450
www.uspto.gov

| APPLICATION NUMBER | FILING OR 371(C) DATE | FIRST NAMED APPLICANT | ATTY. DOCKET NO./TITLE |
|---|---|---|---|
| 15/096,686 | 04/12/2016 | Jongju Na | NA001KR_US2 |

**CONFIRMATION NO. 2620**

26338
MERLE W. RICHMAN, III
P.O. BOX 3333
LA JOLLA, CA 92038

**FORMALITIES LETTER**

*OC000000082491836*

Date Mailed: 04/28/2016

# NOTICE TO FILE MISSING PARTS OF NONPROVISIONAL APPLICATION

**FILED UNDER 37 CFR 1.53(b)**

***Filing Date Granted***

**Items Required To Avoid Abandonment:**

An application number and filing date have been accorded to this application. The item(s) indicated below, however, are missing. Applicant is given **TWO MONTHS** from the date of this Notice within which to file all required items below to avoid abandonment. Extensions of time may be obtained by filing a petition accompanied by the extension fee under the provisions of 37 CFR 1.136(a).

- The statutory basic filing fee is missing.
- The application search fee must be submitted.
- The application examination fee must be submitted.

The application is informal since it does not comply with the regulations for the reason(s) indicated below.

The required item(s) identified below must be timely submitted to avoid abandonment:

- Replacement drawings in compliance with 37 CFR 1.84 and 37 CFR 1.121(d) are required. The drawings submitted are not acceptable because:
  - The drawings submitted to the Office are not electronically reproducible because portions of figures 10A - 10E, 11A are missing and/or blurry.
- A substitute specification excluding claims in compliance with 37 CFR 1.52, 1.121(b)(3), and 1.125 is required. The substitute specification must be submitted with markings and be accompanied by a clean version (without markings) as set forth in 37 CFR 1.125(c) and a statement that the substitute specification contains no new matter (see 37 CFR 1.125(b)). Since a preliminary amendment was present on the filing date of the application and such amendment is part of the original disclosure of the application, the substitute specification must include all of the desired changes made in the preliminary amendment. See 37 CFR 1.115 and 1.215.

Applicant is cautioned that correction of the above items may cause the specification and drawings page count to exceed 100 pages. If the specification and drawings exceed 100 pages, applicant will need to submit the required application size fee.

- Surcharge as set forth in 37 CFR 1.16(f) must be submitted.
  The surcharge is due for any one of:
  - late submission of the basic filing fee, search fee, or examination fee,
  - late submission of inventor's oath or declaration,
  - filing an application that does not contain at least one claim on filing, or
  - submission of an application filed by reference to a previously filed application.

**SUMMARY OF FEES DUE:**

The fee(s) required within **TWO MONTHS** from the date of this Notice to avoid abandonment is/are itemized below. Small entity discount is in effect. If applicant is qualified for micro entity status, an acceptable Certification of Micro Entity Status must be submitted to establish micro entity status. (See 37 CFR 1.29 and forms PTO/SB/15A and 15B.)

- $ **70** basic filing fee.
- $ **70** surcharge.
- $ **300** search fee.
- $ **360** examination fee.
- $( **0**) previous unapplied payment amount.
- $ **800** TOTAL FEE BALANCE DUE.

**Items Required To Avoid Processing Delays:**

Applicant is notified that the above-identified application contains the deficiencies noted below. No period for reply is set forth in this notice for correction of these deficiencies. However, if a deficiency relates to the inventor's oath or declaration, the applicant must file an oath or declaration in compliance with 37 CFR 1.63, or a substitute statement in compliance with 37 CFR 1.64, executed by or with respect to each actual inventor no later than the expiration of the time period set in the "Notice of Allowability" to avoid abandonment. See 37 CFR 1.53(f).

- A properly executed inventor's oath or declaration has not been received for the following inventor(s):
  Jongju Na

Replies must be received in the USPTO within the set time period or must include a proper Certificate of Mailing or Transmission under 37 CFR 1.8 with a mailing or transmission date within the set time period. For more information and a suggested format, see Form PTO/SB/92 and MPEP 512.

Replies should be mailed to:

Mail Stop Missing Parts
Commissioner for Patents
P.O. Box 1450
Alexandria VA 22313-1450

Registered users of EFS-Web may alternatively submit their reply to this notice via EFS-Web, including a copy of this Notice and selecting the document description "Applicant response to Pre-Exam Formalities Notice". https://sportal.uspto.gov/authenticate/AuthenticateUserLocalEPF.html

For more information about EFS-Web please call the USPTO Electronic Business Center at 1-866-217-9197 or visit our website at http://www.uspto.gov/ebc.

If you are not using EFS-Web to submit your reply, you must include a copy of this notice.

Questions about the contents of this notice and the requirements it sets forth should be directed to the Office of Data Management, Application Assistance Unit, at **(571) 272-4000** or **(571) 272-4200** or **1-888-786-0101**.

/nhassani/

**IN THE UNITED STATES PATENT AND TRADEMARK OFFICE**

| | |
|---|---|
| Applicant(s): Na | |
| Application No.: 15096686 | |
| Filed: 4/12/2016 | Art Unit: 3769 |
| Title: METHOD, SYSTEM, AND APPARATUS FOR DERMATOLOGICAL TREATMENT | |
| Attorney Docket No.: NA001KR_US2 | |

**RESPONSE TO NOTICE TO FILE MISSING PARTS OF APPLICATION**

Commissioner for Patents
P.O. Box 1450
Alexandria, VA 22313-1450

Sir:

This is in response to a Notice to File Missing Parts of Application under 37 CFR 1.53(f). Enclosed is a copy of said Notice and the following documents and fees to complete the filing requirements of the above-identified application.

(X) A substitute specification excluding claims in compliance with 37 CFR 1.52, 1.121(b)(3), and 1.125 attached including a substitute specification submitted with markings and a clean version (without markings). The substitute specification contains no new matter.

(X) Please replace pages 16-19 of the drawings with attached replacement pages.

(X) Statutory basic filing fee (X) Utility ( ) Design

(X) Missing Parts Surcharge $70.00

(X ) A Petition for Extension of Time for reply to Notice of Missing Parts is attached.
- ( ) one month ($100.00)
- (X) two months ($300.00)
- ( ) three months ($700.00)
- ( ) four months ($1100.00)

I hereby certify that this Correspondence is being deposited with the Unitec States Postal service with sufficient postage for first class mail in an envelope addressed to the Commissioner for Patents, P.O. Box 1450, Alexandria, VA 22313-1450, or the correspondence is being electronically transmitted to the USPTO, on the date indicated below.

Date of Deposit: August 29, 2016

Typed Name: Merle Richman

Signature: /mwresq/_____

Respectfully submitted,

By /mwresq/_____
Merle Richman, Patent Attorney

Reg No. 38282

Date: August 29, 2016

Telephone No. 858 551-2030

SUBSTITUTE SPECIFICATION – CLEAN

UNITED STATES PATENT APPLICATION

# METHOD, SYSTEM, AND APPARATUS FOR DERMATOLOGICAL TREATMENT

**INVENTOR**

**Jongju Na of Republic of Korea**

Prepared by:

Merle W. Richman, Esq.
P.O. Box 3333
La Jolla, CA 92038-3333
ATTORNEY DOCKET NA001KR_US2

# METHOD, SYSTEM, AND APPARATUS FOR DERMATOLOGICAL TREATMENT

## Cross Reference to Related Applications

**[0001]** The present application is a continuation of US Application Number 13/825,083, entitled "METHOD, SYSTEM, AND APPARATUS FOR DERMALOGICAL TREATMENT", Attorney Docket No. NA001KR_US filed on January 20, 2014, which a National Stage entry of PCT/KR2012/001335, filed on February 22, 2012, which claims priority to US Application Number 61/449,080, entitled "METHOD, SYSTEM, AND APPARATUS FOR DERMALOGICAL TREATMENT", Attorney Docket No. NA001US1 filed on March 3, 2011 and US Application Number 13/060,274, Patent No. 8979912, entitled "METHOD, SYSTEM, AND APPARATUS FOR DERMALOGICAL TREATMENT", Attorney Docket No. NA001US filed on February 22, 2011, which is a National Stage entry of PCT Application Number PCT/US2008/074131, entitled "METHOD, SYSTEM, AND APPARATUS FOR DERMALOGICAL TREATMENT", Attorney Docket No. NA001PCT filed on August 22, 2008, which claims priority to Republic of Korea Application Number 10-2008-0076993, entitled "Electrical system, skin, skin care and cosmetic electricity," filed on August 6, 2008, the entirety of each is incorporated by reference.

## Technical Field

**[0002]** Various embodiments described herein relate generally to treating dermatological tissue, including systems, and methods used in treating dermatological tissue.

## Background Information

**[0003]** It may be desirable to treat dermatological tissue; the present invention provides such treatment.

## Brief Description of the Drawings

**[0004]** FIG. 1A is a simplified isometric diagram of a dermatological treatment apparatus according to various embodiments.

**[0005]** FIG. 1B is a simplified, side diagram of the dermatological treatment apparatus according to various embodiments.

**[0006]** FIG. 1C is a simplified, exploded layer view of the dermatological treatment apparatus according to various embodiments.

**[0007]** FIG. 1D is a simplified view of a layer of a dermatological treatment apparatus according to various embodiments.

**[0008]** FIG. 2A is a simplified isometric diagram of a dermatological treatment architecture according to various embodiments.

**[0009]** FIG. 2B is a simplified cross-sectional diagram of a dermatological treatment apparatus according to various embodiments.

**[0010]** FIG. 2C is a simplified cross-sectional diagram of another dermatological treatment apparatus according to various embodiments.

**[0011]** FIG. 2D is a simplified cross-sectional diagram of another dermatological treatment apparatus according to various embodiments.

**[0012]** FIG. 2E is a simplified view of a layer of a dermatological treatment apparatus according to various embodiments.

**[0013]** FIG. 2F is a simplified, exploded view of layers of the dermatological treatment apparatus according to various embodiments.

**[0014]** FIG. 3A is a simplified isometric diagram of a dermatological treatment apparatus according to various embodiments.

**[0015]** FIG. 3B is a simplified isometric diagram of another dermatological treatment apparatus according to various embodiments.

**[0016]** FIG. 4A is a simplified view of a layer of a dermatological treatment apparatus according to various embodiments.

**[0017]** FIG. 4B is a simplified view of a layer and apparatus of a dermatological treatment system according to various embodiments.

**[0018]** FIG. 4C is a simplified view of a layer and apparatus of a dermatological treatment system according to various embodiments.

**[0019]** FIGs. 5A-6 are diagrams of signals that may be applied to one or more dermatological treatment systems according to various embodiments.

**[0020]** FIG. 7A-7C are flow diagrams illustrating dermatological treatment system processing algorithms according to various embodiments.

**[0021]** FIG. 8 is a block diagram of an article according to various embodiments.

**[0022]** FIG. 9A is a simplified block diagram of a dermatological treatment architecture according to various embodiments.

**[0023]** FIG. 9B is a block diagram of an article according to various embodiments that may be employed in architecture of FIG. 9A.

**[0024]** FIG. 9C is a simplified cross-sectional diagram of a cartridge based dermatological treatment apparatus with the needles retracted according to various embodiments.

**[0025]** FIG. 9D is a simplified cross-sectional diagram of a cartridge based dermatological treatment apparatus with the needles deployed according to various embodiments.

**[0026]** FIG. 10A-10D are simplified, partial, cross-sectional diagrams of a cartridge in various stages of attachment to a dermatological treatment apparatus according to various embodiments.

**[0027]** FIG. 10E is a simplified, partial, cross-sectional diagram of a dermatological treatment apparatus with needles deployed according to various embodiments.

**[0028]** FIG. 10F is a simplified cross-sectional diagram of a cartridge based dermatological treatment apparatus cartridge interface according to various embodiments.

**[0029]** FIG. 11A is a simplified, partial, cross-sectional diagram of a dermatological treatment apparatus cartridge coupled to a handle with needles deployed according to various embodiments.

**[0030]** FIG. 11B is a simplified, cross-sectional diagram of a cartridge needle assembly according to various embodiments.

**[0031]** FIG. 11C is a simplified, cross-sectional, exploded diagram of a cartridge needle assembly according to various embodiments.

**[0032]** FIG. 12 is a flow diagram illustrating a dermatological treatment system processing algorithms according to various embodiments.

## Detailed Description

**[0033]** FIG. 1A is a simplified isometric diagram and FIG. 1B is a simplified side view of a dermatological treatment apparatus 10 according to various embodiments. The apparatus 10 may include a user handle 220 coupled to an acupuncture plate 200. In an embodiment the plate 200 may be elastically coupled to the handle segment 222 via an elastomeric section 210. The elastomeric section may be comprised of a combination of elastomeric materials and non-elastomeric materials. The elastomeric materials may include plastics, rubber (synthetic or natural), and spring(s).

**[0034]** FIG. 1C includes a simplified exploded view of an embodiment of an acupuncture plate 200 according to various embodiments. The plate 200 may include an upper, substantially rigid section or layer 290, deformable or elastic section 270 or layer, and acupuncture section or layer 250. The acupuncture section 250 may include a plurality of acupuncture pins or needles 230. FIG. 1D is a simplified bottom view of the plate 200 showing the location or holes 212 for the pins or needles 230. In an embodiment the plate 200 may have a rectangular cross section having a dimensional about 1 to 4 cm in width and about 1 to 6 cm in length. The plate 200 may any shape including circular, elliptical, polygon, or other shape where the shape may be particular to a dermatological area to be treated.

**[0035]** In an embodiment the plate may include about 140 pins or needles 230 uniformly separated. Each needle may be about 0.1 to 0.4 mm in diameter and 0.2 mm to 1.4 mm in length including 0.3 mm diameter and 0.8 mm in length in an embodiment. The elastic section or layer 270 may be comprised of a combination of elastomeric materials and non-elastomeric materials. The elastomeric materials may include plastics, rubber (synthetic or natural), and spring(s). The pin section 250 may be coupled directly or indirectly to the upper section 290 via the elastic section 270, including via glues, screws, welds, or other connection. In an embodiment the pin section 250 may include elastomers to enable at least partial deformation of the pin section 250 about the pins 230.

**[0036]** In operation a user may employ the apparatus 10 to create a plurality of micro-wounds or holes in dermatological layers of a mammal's 20 skin or dermis. The micro-wound or hole creation may improve the absorption or application of one or more chemicals applied on or about the micro-wounds or holes.

**[0037]** FIG. 2A is a simplified diagram of a dermatological treatment architecture 310 according to various embodiments. Architecture 310 includes an acupuncture apparatus 320 and an

electrical signal generation system 300. The electrical signal generation system 300 may be electrically coupled to the acupuncture apparatus 320 via one or more wires 300A and to a mammal 20 to be treated via one or more wires 300B. FIG. 2B is a simplified cross-sectional diagram of the acupuncture apparatus 320 according to various embodiments. The apparatus 320 may include a handle 330, elastic section 333, electrical interface 340, internal wire(s) 331and plate 350. The pins 351 may have a length A (0.3 mm to 2.1 mm in an embodiment) where at least one pin 351 is electrically coupled to the electrical interface 340 via the internal wire 331. The electrical interface 340 may be removably connected to the system 300 wire 300A.

**[0038]** The electrical signal generation system 300 may generate a variety of signals (such as shown in FIGS. 5A to 6) to vibrate one or more pins 351 electrically coupled to the system 300 via the internal wire 331 and lead 300A. A pin vibration 351 may increase the micro-wound or cut formed in dermis by the pin 351. FIG. 2C is a simplified cross-sectional diagram of an acupuncture apparatus 360 according to various embodiments. The apparatus 360 may include a handle 330, an elastic section 333, an electrical conductive interface 390, internal wire(s) 331, signal generator 370, switch 375, and plate 350. The signal generator 370 may be coupled to at least one pin 351 via internal wire 331 and coupled to the conductive interface 390.

**[0039]** The signal generator or module 370 may generate a variety of signals (such as shown in FIGS. 5A to 6) to vibrate one or more pins 351 electrically coupled to the system 300 via the internal wire 331 and the conductive interface 390. In operation a user 20 may touch the conductive interface 390 and place one or more electrically coupled pins 351 in contact with their dermis to form an electrical pathway from the pin 351 to the electrical conductive interface 390. The signal generator 370 may include a battery to supply energy to generate one or more electrical signals. The switch 375 coupled to the generator 370 may cause the generator to produce one or more electrical signals for a predetermined time interval or until the switch 375 is triggered again. As noted a pin vibration 351 may increase the micro-wound or cut formed in dermis by the pin 351.

**[0040]** FIG. 2D is a simplified cross-sectional diagram of an acupuncture apparatus 362 according to various embodiments. The apparatus 362 may include a handle 330, an elastic section 333, internal wire(s) 331, 332, signal generator 370, switch 375, and plate 350. The signal generator 370 may be coupled to at least one pin 351 via internal wire 331 and coupled to at least one other pin 352 via internal wire 332. When active the pins 351, 352 may form at least one dipole pair. The

signal generator or module 370 may generate a variety of signals (such as shown in FIGS. 5A to 6) to vibrate one or more dipole pair or bipolar pins 351, 352.

**[0041]** FIG. 2F includes a simplified exploded view of an embodiment of an acupuncture plate 350 including at least one electrically coupled pin 351 according to various embodiments. The plate 350 may include an upper, substantially rigid section or layer 357, deformable or elastic section 355 or layer, and acupuncture section or layer 353. The acupuncture section 353 may include a plurality of acupuncture pins or needles 351 where at least one pin 351 is electrically coupled to the wire 331. In a bipolar configuration a second wire 332 may be coupled to at least one other pin 351. FIG. 2E is a simplified bottom view of the plate 350 showing the pins or needles 359, 357 where the pins may be electrically coupled to a first wire 331 and a second wire 332 to form dipole pair (bipolar pins).

**[0042]** In an embodiment the plate 350 may have a rectangular cross section having a dimensional about 1 to 4 cm in width and about 1 to 6 cm in length. The plate 350 may any shape including circular, elliptical, polygon, or other shape where the shape may be particular to a dermatological area to be treated.

**[0043]** In an embodiment the plate may include about 140 pins or needles 351 uniformly separated. Each needle may be about 0.1 to 0.4 mm in diameter and 0.2 mm to 1.4 mm in length including 0.3 mm diameter and 0.8 mm in length in an embodiment. The elastic section or layer 355 may be comprised of a combination of elastomeric materials and non-elastomeric materials. The elastomeric materials may include plastics, rubber (synthetic or natural), and spring(s). The pin section 353 may be coupled directly or indirectly to the upper section 357 via the elastic section 355, including via glues, screws, welds, or other connection. In an embodiment the pin section 353 may include elastomers to enable at least partial deformation of the pin section 353 about the pins 351.

**[0044]** FIGS. 3A and 3B are simplified isometric diagrams of acupuncture apparatus 400, 460 including at least one pin 451 that may be coupled to an electrical signal via an internal wire 458. Each apparatus 400, 460 includes curved roller 450 having a plurality of acupuncture pins 451 where the pins 451 may be similar to pins 351. In apparatus 400, the electrical lead wire 300A may be coupled to an electrical interface 410 in the apparatus handle 430 where the interface 410 is electrically coupled to the internal wire 458. In apparatus 460, the handle 430 may include a signal generator 470 similar to generator 370, switch 475, and conduction surface 490. Apparatus 460 may

operate similar to apparatus 360 in operation other than the rolling capability of the apparatus 460, 400. In an embodiment the rollers 450 may have various configurations to conform to a dermal area to be treated.

**[0045]** In any of the above apparatus 10, 320, 350, 360, 400, 460, the plate or roller 200, 350, 450 may include a plurality of embedded LEDs 32A, 32B, a battery 52, a controller 54, and an antenna 56 as shown in FIG. 4A. In an embodiment the LED 32A may be configured to emit energy of a first particular frequency range and the LED 32B may be configured to emit energy of a second particular frequency range. The surface 22 of a roller 450, plate 200, 350, 450 may also be embedded with a chemical 22A that may be used to treat dermatological cells. The chemical 22A may be reactive to the first and the second frequency ranges. Further dermatological cells may be reactive to the first and the second frequency ranges. In addition, the combination of the chemical 22A and the application of the first and the second frequency ranges to the chemical 22A and dermatological cells may have a synergetic effect.

**[0046]** In an embodiment the chemical 22A may be applied directly to the dermatological cells to be treated. In a further embodiment a chemical 22A may not be employed in addition to the apparatus 10, 320, 350, 360, 400, 460. In an embodiment the pin section 250, 353, may be translucent and comprised of polyurethane, medical silicon, or other pliable, translucent, hypoallergenic material.

**[0047]** In an embodiment the local controller 54 and battery 52 may also be embedded in the upper section 290, 357, pin section 230, 351, or the handle 220, 330, or separately between these sections. The controller 54 may be electrically coupled to the one or more LEDs 32A, 32B. The controller 54 may also be coupled to a battery 52. The controller 54 may generate one or more signals for LEDs 32A, 32B as a function of a user switch 75, 56. The signals may vary as a function of the first and second frequency ranges. The controller 54 may include one or more timers 58 that may limit the application of energy to the LEDs 32A, 32B to predetermined time intervals. In an embodiment the controller may also be coupled to an antenna 56 to receive or transmit one or more signals related to the transmission of energy to one or more LEDs 32A, 32B. In an embodiment the system 10 may be configured to treat a particular segment of dermatological cells such as a face. The apparatus 10 may be configured to conform to a user's anatomy so that emitted light is focused on dermatological cells. In another embodiment 200, the system 200 may be configured to treat

another anatomical region including dermatological cells on an arm, leg, chest, hands, feet, neck, or other region.

**[0048]** In an embodiment 510 shown in FIG. 4B, a controller 54, an antenna 104, and a power source 60 may be located external to the apparatus 10, 320, 360. The power source 60 may be coupled to the controller 54. The controller 54 may be coupled to one or more LEDs 32A, 32B via one or more electric wires 106. The controller 54 may generate one or more signals for LEDs 32A, 32B as a function of the user switch 56. The signals may vary as a function of the first and second frequency ranges. The controller 54 may include one or more timers 58 that may limit the application of energy to the LEDs 32A, 32B to predetermined time intervals. In an embodiment the controller may also be coupled to an antenna 104 to receive or transmit one or more signals related to the transmission of energy to one or more LEDs 32A, 32B.

**[0049]** As shown in FIG. 4C, in any of the above apparatus 10, 320, 350, 360, 400, 460, the plate or roller 200, 350, 450 may include a plurality of embedded LED lens 536, a fiber optic pathway 534, and an LED 532. In this embodiment, system 530 LED 532 shown in FIG. 4C may be coupled to lens 536 via the fiber optic pathway 534. The controller 540 may generate an LED signal via the LED 532 that is transmitted to dermatological cells via the lens 536 and the fiber optic pathway 534.

**[0050]** FIGS.5A-5B are diagrams of electrical signal waveforms 650, 630, 640 that may be applied to one or more LEDs 32A, 32B, 532 and to the pins 230, 351, 451 according to various embodiments. The signal waveform 650 includes several square-wave pulses 652, 654, 656 that may be applied to an LED 32A, 32B, 532. Each pulse 652, 654, 656 may a have a similar magnitude and envelope. The waveform 650 may be used to energize an LED 32A, 32B, 532 and to the pins 230, 351, 451 periodically P1 for a predetermined interval T1 where each pulse 652, 654, 656 has a amplitude A1. In an embodiment, A1 may be about 0.1 milliamperes (mA) to 10 mA, the pulse width T1 may be about 100 microseconds (μs) to 500 μs and the period P1 may from 100 ms to 500 ms as a function of the energy required to create capacitance in a liquid. In another embodiment, A1 may be about 0.5 milliamperes (mA) to 5 mA, the pulse width T1 may be about 200 microsecond (μs) and the period P1 may about 250 ms as a function of the energy to drive an LED or cause one or more pins 230, 351, 451 to vibrate.

**[0051]** In FIG. 5B a signal waveform 630 may be applied to a first LED 32A, 32B, 532 module or group and to the pins 230, 351, 451 and a second waveform 640 may be applied or used

to energize a second LED 32A, 32B, 532 module and the pins 230, 351, 451, 352. The signal waveform 630 includes several square-wave pulses 632, 634, and 636 and the signal waveform 640 includes several square-wave pulses 642, 644, and 646. Each pulse 632, 634, 636, 642, 644, 646 may a have a similar magnitude and envelope. The waveform 630 may be used to energize a first LED 32A, 32B, 332 module and the pins 230, 351, 451 periodically P1 for a predetermined interval T1 where each pulse 632, 634, 636 has an amplitude A1. The waveform 640 may be used to energize a second LED 32A, 32B, 332 module and the pins 230, 351, 451 periodically P2 for a predetermined interval T2 where each pulse 642, 644, 646 has an amplitude B1. The pulse width T1, T2 may be about 100 microseconds (μs) to 500 μs and the period P1, P2 may from 100 ms to 500 ms as a function of the energy to affect dermatological cells or chemicals 22A. In another embodiment, A1, A2 may be about 0.5 milliamperes (mA) to 5 mA, the pulse width T1, T2 may be about 200 microsecond (μs) and the period P1, P2 may about 250 ms as a function of the energy required to affect dermatological cells or chemicals 22A. In an embodiment the pulses 632, 634, 636 do not substantially overlap the pulses 642, 644, 646. In an embodiment T1 > T2 and P2 is an integer multiple of P1.

**[0052]** FIG. 6 depicts a waveform 670 that includes multiple pulses 672, 674, 676, 678, 682, and 684 that may not overlap in the time or the frequency domain. In an embodiment each pulse 672, 674, 676, 678, 682, and 684 may have a pulse width T3, and frequency spectrum width F1 and period P3. The pulse 672 is frequency offset from the pulse 674, the pulse 676 is frequency offset from the pulse 678, and the pulse 682 is frequency offset from the pulse 684. The pulses 672, 674, 676, 678, 682, and 684 may be applied to an LED module to affect dermatological cells or chemicals 22A and the pins 230, 351, 451. Pulses 672, 674 having different frequency spectrums may enable different LED stimulation. In an embodiment the pulses 672, 676, 682 may be applied to a first LED module and the pulses 674, 678, 684 may be applied to a second LED module. The frequency separation between the respective pulses may enable simultaneous energization of a first and a second LED module and the pins 230, 351, 451 and subsequent and independent spectrum generation.

**[0053]** In an embodiment the invention may employ the algorithm 740 shown in FIG. 7A to apply therapy to dermatological cells. A user, clinician, or equipment may place an apparatus 10, 320, 360, 360, 400, 460 on dermatological cells to be treated (activity 741) including pressing the apparatus against the cells firmly enough to embed one or more pins 251, 351, 451 in the cells. A

first signal such as shown in FIGS. 5A, 5B, and 6 may be applied to a first LED module or group (32A) and the pins 230, 351, 451 of a dermatological apparatus 10, 320, 360, 360, 400, 460 (activity 742) for a predetermined time period (activity 744). A second signal such as shown in FIGS. 5A, 5B, and 6 may be applied to a second LED module or group (32B) and the pins 230, 351, 451 of a dermatological apparatus 10, 320, 360, 360, 400, 460 (activity 746) for a predetermined time period (activity 748). The signals applied to the groups may be selected to stimulate dermatological cells or chemicals 22A or cause vibration of one or more pins 251, 351, 451.

**[0054]** In another embodiment the invention may employ the algorithm 750 shown in FIG. 7B to apply therapy to dermatological cells. A user, clinician, or equipment may apply a light sensitive chemical on an apparatus 10, 320, 360, 360, 400, 460 or on dermatological cells to be treated (activity 751). The user, clinician, or equipment may place apparatus 10, 320, 360, 360, 400, 460 on dermatological cells to be treated (activity 752). A signal such as shown in FIGS. 5A, 5B, and 6 may be applied to a LED module or group (32A or 32B) and the pins 230, 351, 451 (activity 354) for a predetermined time period (activity 356).

**[0055]** In another embodiment the invention may employ the algorithm 760 shown in FIG. 7C to apply therapy to dermatological cells. A user, clinician, or equipment may apply a light sensitive chemical on an apparatus 10, 320, 360, 360, 400, 460 or on dermatological cells to be treated (activity 761). The user, clinician, or equipment may place an apparatus 10, 320, 360, 360, 400, 460 on dermatological cells to be treated (activity 762). A first signal such as shown in FIGS. 5A, 5B, and 6 may be applied to a first LED module or group (32A) and one or more pins 251, 351, 451 of a dermatological apparatus 10, 320, 360, 360, 400, 460 (activity 763) for a predetermined time period (activity 764). A second signal such as shown in FIGS. 5A, 5B, and 6 may be applied to a second LED module or group (32B) and one or more pins 251, 351, 451 of a dermatological apparatus 10, 320, 360, 360, 400, 460 (activity 766) for a predetermined time period (activity 768).

**[0056]** The apparatus 10, 320, 360, 360, 400, 460 may be used to employ cosmetic or medications or other chemicals directly on dermatological cells such as skin with the addition of light of specific frequencies for treatment and healing of epidermal cells of the skin or tissue below the skin with the object of assisting the agents used in delivery, uptake, action and function more effectively. The LEDs 32A, 32B may create the specific frequencies of light. The apparatus 10, 320, 360, 360, 400, 460, light application may enable cosmetic or medication or other active chemicals 22A on dermatological cells for longer time periods while preventing dehydration of the

applied substances. Such light application may improve the efficacy of cosmetic or medication or other active chemical as a function of the selected wavelengths or frequencies.

**[0057]** Further the dermatological system application may increase cellular activity and help heal tissue faster and facilitate the delivery, uptake and use in the cell of the cosmetics, medications, or chemicals 22A used. The LED light of specific frequencies may increase fibroblast production and collagen as well as other activities of the cell including stimulating the organelles and mitochondria to produce ATP for cell energy for functioning, decreasing treatment time and facilitate healing. The apparatus 10, 320, 360, 360, 400, 460 make the agents used on the body more efficacious and useful to the body on a cellular level.

**[0058]** The apparatus 10, 320, 360, 360, 400, 460 may stimulate the basic energy processes in the mitochondria (energy compartments) of each cell, particularly when near-infrared light is used to activate the color sensitive chemicals (chromophores, cytochrome systems) inside but not limited to these spectrum alone as the UV, other visible and IR spectrums may also be usable. In an embodiment optimal LED wavelengths for skin repair may include 640, 680, 730 nanometers (nm) wavelengths to IR 880 nm. Further application of blue light 400 nm to 490 via the apparatus 10, 320, 360, 360, 400, 460 may inhibit the growth and kill bacteria, fungus in and on dermatological cells. The apparatus 10, 320, 360, 360, 400, 460 may be employed to apply cosmetics, medications and/or other actives directly to the skin and maintain their presence long-term while using LED or other actinic light to increase their effect on the cells and tissue in the body. The apparatus 10, 320, 360, 360, 400, 460 are also highly portability and enable user mobility during treatment.

**[0059]** Chemicals 22A may include cosmetics, medications and other actives appropriate for dermatological cells including AHA's (alpha hydroxy acid), natural oils, aloe vera compounds, collagen boosters, bt, chitosan, daeses, endorphins, photodynamic drugs (PDT) like (Photofrin or ALA), vitamins A, C E or others, kojic acid, retinols or other exfoliant, salicylic acid, anti oxidants or other youth boosters and anti aging cosmetic or medications, antiseptic, antibiotics, anti-cancer agents, aroma therapy agents, fruit and vegetable extracts, anti-inflammatory agents, pain relievers, hormones, depilatories, and others, but the scope of this invention is not limited to these alone but can include any helpful medication, herbal formula or active compound for the skin and/or other tissues.

**[0060]** FIG. 8 is a block diagram of an article 780 according to various embodiments. The article 780 shown in FIG. 8 may be used in various embodiments as a part of apparatus 10, 320,

360, 360, 400, 460 where the article 780 may be any computing device including a personal data assistant, cellular telephone, laptop computer, or desktop computer. The article 780 may include a central processing unit (CPU) 782, a random access memory (RAM) 784, a read only memory (ROM") 806, a display 788, a user input device 812, a transceiver application specific integrated circuit (ASIC) 816, a digital to analog (D/A) and analog to digital (A/D) convertor 815, a microphone 808, a speaker 802, and an antenna 804. The CPU 782 may include an OS module 814 and an application module 813. The RAM 784 may include switches 56 and timers 58.

**[0061]** The ROM 806 is coupled to the CPU 782 and may store the program instructions to be executed by the CPU 782. The RAM 784 is coupled to the CPU 782 and may store temporary program data, overhead information, and the queues 798. The user input device 812 may comprise an input device such as a keypad, touch pad screen, track ball or other similar input device that allows the user to navigate through menus in order to operate the article 780. The display 788 may be an output device such as a CRT, LCD, LED or other lighting apparatus that enables the user to read, view, or hear user detectable signals.

**[0062]** The microphone 808 and speaker 802 may be incorporated into the device 780. The microphone 808 and speaker 802 may also be separated from the device 780. Received data may be transmitted to the CPU 782 via a bus 796 where the data may include signals for an LED 32A, 32B, 332 or optical module or wires 331, 458. The transceiver ASIC 816 may include an instruction set necessary to communicate data, screens, or signals. The ASIC 816 may be coupled to the antenna 804 to communicate wireless messages, pages, and signal information within the signal. When a message is received by the transceiver ASIC 816, its corresponding data may be transferred to the CPU 782 via the serial bus 796. The data can include wireless protocol, overhead information, and data to be processed by the device 780 in accordance with the methods described herein.

**[0063]** The D/A and A/D convertor 815 may be coupled to one or more optical modules to generate a signal to be used to energize one of the optical modules. The D/A and A/D convertor 815 may also be coupled to one devices such as LEDs 32A, 32B and the pins 251, 351, 451. Any of the components previously described can be implemented in a number of ways, including embodiments in software. Any of the components previously described can be implemented in a number of ways, including embodiments in software. Thus, the LEDs 32A, 32B, pins 251, 351, 451, controllers 54, switch 56, timers 58, controller 320 may all be characterized as "modules" herein. The modules may include hardware circuitry, single or multi-processor circuits, memory circuits, software

program modules and objects, firmware, and combinations thereof, as desired by the architect of the system 10, 30, 50, 60 and as appropriate for particular implementations of various embodiments.

**[0064]** FIG. 9A is a simplified block diagram of a dermatological treatment architecture (DTA) 900 according to various embodiments. As shown in FIG. 9A, architecture 900 includes a signal generation and control module (SGC) 910, a handle module 920, and an actuator module 930. In an embodiment the handle module 920 may include a deployable needle module 924 and a motor and LED module 922. In an embodiment the deployable needle module 924 may be releasably coupled to the motor and LED module 922. In a further embodiment the deployable needle module 924 may be a disposable cartridge module 924 to be removed and disposed after one or more treatments or for each patient, client, or user.

**[0065]** The SGC 910 may include one or more displays 912A, user input device 912B, handle module interface 914A, and actuator module interface 914C, electrical energy storage module 913, and one or more wheels 916A, 916B. In an embodiment the SGC 910 may be moveable and the wheels 916A, 916B may be lockable to prevent unintentional movement of the SGC 910 once positioned where desired by a user. In another embodiment the SGC 910 may also be coupled to the external power source including an alternating current (AC) grid source.

**[0066]** In an embodiment the displays 912A may indicate operational parameters for a hand module 920 to be coupled or coupled to the SGC 910. The displays 920 may be touch sensitive so a user may configure one or more operational parameters. In an embodiment the operational parameters may include electrical energy signal intensity to be applied the hand module 920, timing of such energy application, needle deployment timing and depth(s), LED intensity and timing, and number of cycles or shots to be conducted for each actuation via the actuator 930. In an embodiment the actuator 930 may be integral to the SGC 910 or a separate device wireless coupled or wired to the SGC 910 via a cable 914D and the SGC 910 actuator module interface 914C.

**[0067]** In an embodiment the actuator 930 may a mechanical device including a foot actuator or hand based actuator. The actuator 930 may also be an electronic device having an ASIC or running an application on a device (such as a computer, laptop, PDA, cellphone, or other electronic device) such as the module 780 shown in FIG. 8. In an embodiment the application may enable a user to set or control any of the possible operational parameters of the SGC 910 and initiate actuation a device 920 coupled to the SGC 910. FIG. 9B is a block diagram of a CPU module 911 that may be employed in the SGC 910 according to various embodiments.

**[0068]** The CPU module 911 may include a radio frequency (RF) signal generator (RFSG) module 911A, a needle deployment motor controller (NDMC) module 911B, and a photonic signal generator module (PSG) 911C. In an embodiment the photonic signal generator module 911C may be an LED signal generator or controller module 911C. In an embodiment a hand module 920 may include one or more photonic generation devices or modules (922I in FIG. 10A, 10B) where the PSG 911C may generate control or energy signals that cause the photonic modules 922I to generate photons of one or more frequencies with a desired intensity.

**[0069]** The NDMC 911B may control the deployment of one or more needles 924A of a deployable needle module 924 (FIG. 9C) based on one or more user selected operational parameters. The parameters may determine the depth and duty cycle related to the needle(s) 924A deployment in an embodiment. The signals generated by the NDMC 911B to control needle deployment may vary as a function of motor(s) (922A, FIG. 9C) employed to drive one or more needles 924A. As described above an electrical signal may also be applied to the needle(s) 924A to cause vibration of the needles or enable cutting, blending, and coagulation of the tissue in which the needles 924A are deployed. The RFSG 911A may generate one or more electrical signals to be applied to one or more needles 924A based on the selected operational parameters. An electrical signal may be applied to a single needle 924A, group of needles 924A (mono-polar configuration) or pair(s) of needles 924A (bipolar configuration) in an embodiment. In an embodiment the RFSG 911A may apply signals 650, 630, 640, 670 shown in FIGs. 5A, 5B, and 6, a combination thereof, or other signals.

**[0070]** In an embodiment the CPU module 911 via the RFSG 911A, NDMC 911B, and PSG 911C may create various therapy solutions including various combinations of photonic, electrical, and mechanical (needle deployment) therapy. In a further embodiment the CPU module 911 may control the generation of photonic energy to particular modules 922I, individual or group of needle(s) 924A deployment via one or more motors 922A, and control electrical signal(s) applied to individual or group of needles 924A. Accordingly the DTA 900 may apply various therapies based on user selections via the displays 912A, user selection device 912B, and actuator 930. The CPU 911 may employ the algorithm 930 (FIG. 12) or variations thereof to control the operation of the DTA 900.

**[0071]** FIG. 9C is a simplified cross-sectional diagram of a cartridge based dermatological treatment apparatus or hand module 920 with one or more needles 924A retracted according to

various embodiments. FIG. 9D is a simplified cross-sectional diagram of a cartridge based dermatological treatment apparatus or hand module 920 with one or more needles 924A deployed according to various embodiments. The handle module 920 may include a deployable needle module (DNM) 924 and a motor and LED module (MLM) 922. In an embodiment the DLM 924 may be a releasably couplable cartridge module. In a further embodiment the DLM 924 may be a detachable cartridge module (DCM) 924 where the DCM may be changed between therapy application(s) or client(s). In a further embodiment, the DCM 924 may be disposed after usage or cleaned via an autoclave or chemical process.

**[0072]** As shown in FIGs. 9C and 9D, the MLM 922 may include one or more motors 922A, longitudinally extendable drive arms 922B, drive shaft 922C, outer casing 922D, signal interface 922E, photonic generator module 922H, and DCM 924 interface 925 (shown in FIGs. 10A to 10F). The motor(s) 922A and photonic generator module 922H may be electrically coupled to the signal interface 922E to received control signals and energy to operate one or more motors 922A and photonic devices or modules 922I of the photonic generator module 922H. The drive arm(s) 922B may be coupled to one or more drive shafts 922C so the drive shafts may be moved longitudinally to deploy and retract one or more needles 924A when the MLM 922 is operatively coupled to the DNM 924.

**[0073]** As shown in FIGs. 9C and 9D the deployable needle module 924 may include at least one deployable needle 924A, MLM connecting arm and drive coupling tabs 924B, and MLM connecting/locking arms 924C. The MLM connecting/locking arms 924C may be configured to engage and lock to DCM 924 interface 925 recesses 925D (FIG. 10F). The MLM connecting arm and drive coupling tabs 924B may be configured to disengage connecting/locking arms 924C from the MLM interface 925 when the tabs 924B are depressed inward in an embodiment (as shown in FIG. 10B). The tabs 924B may further displace drive shaft connecting arms 924D (FIG. 10A) inward or centrally when the tabs 924B are depressed inwardly (as also shown in FIG. 10B). When the connecting/locking arms 924C are depressed inwardly or centrally (FIG. 9C and 9D) from an outward position (FIG. 10B). The arms 924C may engage the interface 925 recesses 925D to securely hold the DNM 924 to the MLM 922. The arms 924C may also displace the tabs 924B outwardly and cause the drive shaft connecting arms 924D to return outwardly.

**[0074]** The drive shaft connecting arms 924D may securely engage the drive shaft 922C tip 922F (FIG. 10E) recess 922G (FIG. 10E) when they return to an outward position as shown in FIG.

10D and 10E. In this configuration the DNM 924 is securely coupled to the MLM 922 via the arms 924C and 924D. In this configuration the motor(s) 922A via drive shaft(s) 922C coupled to the motor 922A shaft 922B may reliably drive one or more needles 924A of the DNM 924 (from a retracted or deployed position such as shown in FIGs. 9C and 9D, respectively). Further the motor(s) 922A may include steps or infinite drive extension 922B control to enable precise needle deployment depth or extension beyond the DNM 924 shell (924E, Fig. 10A).

**[0075]** FIG. 10A-10D are simplified, partial, cross-sectional diagrams of the DNM 924 in various stages of attachment to the MLM 922 via the arms 924C and 924D according to various embodiments. As shown in FIG. 10A the DNM or DCM 924 is decoupled from the MLM 922. The MLM 922 includes the photonic generator module (PGM) 922H, interface 925, and drive shaft tip 922F in a distal portion. As shown in FIG. 10A the PGM 922H may include one or more photon modules 922I. The photon modules 922I may be LED modules and emit photon with various frequencies and intensities based on the PSG 911C control signal.

**[0076]** As shown in FIG. 10A the DNM or DCM 924 may include the connecting arms 924C, deflecting tabs 924B, drive shaft coupling arms 924D, outer shell 924E, and one or more needles 924A. In an embodiment the drive shaft coupling arms 924D may include tabs that may securely engage the drive shaft tip 922F recess 922G. The drive shaft coupling arms 924D may be returnably deflectable inwardly (as shown in FIG. 10B) via inward depression of the tabs 924B. Such inward depression of the tabs 924B may deflect the coupling arms 924C outward. Similarly, inward depression of the coupling arms 924C to engage the interface 925 recesses 925D securely may deflect the tab arms 924B outwardly (relative the central axis of the DNM 920). Such outward movement may enable the drive shaft coupling arms 924D to return to a non-deflected state as shown in FIG. 10A.

**[0077]** In an embodiment a DNM or DCM 924 may be securely coupled to a MLM 922 by first completely compressing the arms or tabs 924B as shown in FIG. 10B. As noted above such inward compression may cause the coupling arms 924C to deflect outwardly and the drive shaft coupling arms 924D to be deflected inwardly towards each other. The drive shaft coupling arms 924D may be compressed so they may fit within the drive shaft 922C tip 922F recess 922G as the DNM or DCM 924 is advanced toward the MLM 922 distal end to securely couple the DNM 924 to the MLM 922 (as shown in FIG. 10D). After the DNM or DCM 924 is placed over the MLM 922 distal end so the drive shaft coupling arms 924D are located within the drive shaft 922C tip 922F

recess 922G and the coupling arms 924C are adjacent the MLM 922 interface 925 recesses 925D as shown in FIG. 10C.

**[0078]** To complete the coupling of a DNM 924 to the MLM 922, the coupling arms 924C may compressed inwardly as shown in FIG. 10D. The compression of the coupling arms 924C may deflect the tabs or arms 924B outwardly. Such outward deflection of the arms 924B may enable the drive shaft coupling arms 924D to return to a non-deflected state and securely engage the MLM 922 drive shaft 922C tip 922F recess 922G (as shown in FIG. 10D). In an embodiment a single coupling arm 924C, drive shaft coupling arm 924D, and tab 924B may be employed in an DNM 924. After the secure coupling of the DNM 924 to the MLM 922, the MLM 922 via the motor(s) 922A may controllably deploy one or more needles 924A as shown in FIG. 10E. FIG. 10F is a simplified cross-sectional diagram of a DNM interface 925 according to various embodiments.

**[0079]** As noted the interface 925 may include one or more recesses 925D to be securely engaged to DNM 924 coupling arms 924C. The interface 925 may also include several fenestrations or openings 925A, 925B, 925C (FIG. 10F). The central fenestration 925A may be sized to enable passage of the MLM 922 drive shaft 922C tip 922F. The fenestrations 925C may be sized and located above one or more photon modules 922I to enable photons generated by the photon modules 922I to pass into the DNM 924. In an embodiment the DNM 924 outer casing 924E may be translucent and act as a waveguide to communicate photons to the needle area of the DNM 924. The fenestrations 925B may be sized and configured to enable electrical coupling pins 924G (FIG. 11A) passage from the DNM 924 to electrical couplings of the MLM 922. The pins 924G may communicate electrical signals from the RFSG 911A to one or more needles 924A via the wires 914B and MLM 922.

**[0080]** FIG. 11A is a simplified, partial, cross-sectional diagram of DNM 924 coupled to a MLM 922 with needles 924A deployed according to various embodiments. As shown in FIG. 11A, the DNM 924 may further include electrical coupling pins 924G set with a spring loaded base 924H (in an embodiment). As noted the pins 924G may extend to electrical contacts in the MLM 922 via the interface 925 fenestrations 925B. Although a pair of pins 924G is shown, one or more pins 924G may be employed in a DNM 924 according to various embodiments. A drive shaft coupling arm 924D may include an offset 924I where the offset may be configured to engage a tab or arm 924B.

**[0081]** As shown in FIG. 11A when the needle array or assemble 924F is deployed depression of the tabs 924B inwardly will not engage the drive shaft coupling arms 924D (via the offsets 924I). Such a configuration may prevent unintentional decoupling of the DNM 924 to the MLM 922 when the needle assembly 924F is at least partially deployed. As shown in FIG. 11A, the electrical contact pin 924G is sized to fit within the spring loaded based 924H. In an embodiment the internal spring 924M (FIG. 11C) may force extension of the pin 924G to maintain electrical conduction with the MLM 922 as the needle assembly 924F is moved (recessed and deployed to various depths). FIG. 11B is a simplified, cross-sectional diagram of a DNM 924 needle assembly 924F according to various embodiments. FIG. 11C is a simplified, cross-sectional, exploded diagram of the DNM 924 needle assembly 924F according to various embodiments. As shown in FIGs. 11B and 11C, the needle assembly 924F may include a pin cover 924J, drive arm module 924L, needles 924A, pins 924G with bases 924H, and needle printed circuit board (PCB) 924K.

**[0082]** In an embodiment the PCB 924K may couple one or more needles 924A to a first pin 924G base 924H and another one or more needles 924A to another pin 924G based 924H. The first pin 924G and second pin 924H may couple alternating rows or columns of needles 924A to form one or more dipoles between such needles 924A. The drive shaft coupling arms 924D may have a base 924L where the cover 924J includes fenestrations for the needles 924A, a recess for the PCB 924K, and an outer recess for the coupling arm base 924L (as shown assembled in FIG. 11B).

**[0083]** FIG. 12 is a flow diagram illustrating a DTA 900 processing algorithms 930 according to various embodiments. As noted the DTA 900 SGC 911 RFSG 911A, NDMC 911B, and PSG 911C may enable a user or clinician to select a variety of operational parameters to deliver a desired combination of electrical, light (photonic), and mechanical (needle) therapy to dermatological tissue. In the algorithm 930, a user may select different operational modes including cut (activities 932A to 932F), blend (activities 934A to 934F), and coagulation (activities 936A to 936F) in an embodiment. In a cut operational mode, a user may select the electrical signal intensity (activity 932B) and application time (activity 932C). The CPU 911 may determine the total energy that will be applied for each activation based on the selected intensity and time (total fluence – activity 932D). Then, upon activation (activity 932E, 932F) the DTA 900 may energize the MLM 922 based on the operational parameters.

**[0084]** In a blend operational mode (activity 934A), a user may select the electrical signal intensity, start delay, and duty cycle (activity 934B) and needle deployment depth and number of

shots per activation (activity 934C). The duty cycle may include the delay before energy and needle deployment, the time the energy and needles are deployed, and the subsequent off or rest time before the next possible duty cycle. As noted above the motor(s) 922A may enable precise needle extension (effective depth) control. In an embodiment the motor(s) 922A may include a transverse motor that converts rotational force to longitudinal force. The motor may be a Haydon model number: 21H4AB-05-049 having a motor speed of about 0.005mm/msec and motor power of about 1000 Hz approximately 40N (Newton) (described in detail at www.haydonkerk.com and whose specifications are incorporated by reference).

**[0085]** The CPU 911 may determine the total energy that will be applied for each activation based on the selected intensity and duty cycle (total fluence – activity 934D). Then, upon activation (activity 934E, 934F) the DTA 900 may energize the MLM 922 based on the operational parameters and deploy the needle assembly 924F to a desired extension beyond the DNM 924 shell 924E to enable a desired depth of needle 924A penetration within tissue when the shell 924E is placed adjacent the tissue.

**[0086]** In a coagulation operational mode (activity 936A), a user may select the electrical signal intensity and start delay (activity 936B) and needle deployment depth and number of shots per activation (activity 936C). As noted above the motor(s) 922A may enable precise needle extension (effective depth) control. The CPU 911 may determine the total energy that will be applied for each activation based on the selected intensity (total fluence – activity 936D). Then, upon activation (activity 936E, 936F) the DTA 900 may energize the MLM 922 based on the operational parameters and deploy the needle assembly 924F to a desired extension beyond the DNM 924 shell 924E to enable a desired depth of needle 924A penetration within tissue when the shell 924E is placed adjacent the tissue.

**[0087]** Applications that may include the novel apparatus and systems of various embodiments include electronic circuitry used in high-speed computers, communication and signal processing circuitry, modems, single or multi-processor modules, single or multiple embedded processors, data switches, and application-specific modules, including multilayer, multi-chip modules. Such apparatus and systems may further be included as sub-components within a variety of electronic systems, such as televisions, cellular telephones, personal computers (e.g., laptop computers, desktop computers, handheld computers, tablet computers, etc.), workstations, radios,

video players, audio players (e.g., mp3 players), vehicles, medical devices (e.g., heart monitor, blood pressure monitor, etc.) and others. Some embodiments may include a number of methods.

**[0088]** It may be possible to execute the activities described herein in an order other than the order described. Various activities described with respect to the methods identified herein can be executed in repetitive, serial, or parallel fashion.

**[0089]** A software program may be launched from a computer-readable medium in a computer-based system to execute functions defined in the software program. Various programming languages may be employed to create software programs designed to implement and perform the methods disclosed herein. The programs may be structured in an object-orientated format using an object-oriented language such as Java or C++. Alternatively, the programs may be structured in a procedure-orientated format using a procedural language, such as assembly or C. The software components may communicate using a number of mechanisms well known to those skilled in the art, such as application program interfaces or inter-process communication techniques, including remote procedure calls. The teachings of various embodiments are not limited to any particular programming language or environment.

**[0090]** The accompanying drawings that form a part hereof show, by way of illustration and not of limitation, specific embodiments in which the subject matter may be practiced. The embodiments illustrated are described in sufficient detail to enable those skilled in the art to practice the teachings disclosed herein. Other embodiments may be utilized and derived therefrom, such that structural and logical substitutions and changes may be made without departing from the scope of this disclosure. This Detailed Description, therefore, is not to be taken in a limiting sense, and the scope of various embodiments is defined only by the appended claims, along with the full range of equivalents to which such claims are entitled.

**[0091]** Such embodiments of the inventive subject matter may be referred to herein individually or collectively by the term "invention" merely for convenience and without intending to voluntarily limit the scope of this application to any single invention or inventive concept, if more than one is in fact disclosed. Thus, although specific embodiments have been illustrated and described herein, any arrangement calculated to achieve the same purpose may be substituted for the specific embodiments shown. This disclosure is intended to cover any and all adaptations or variations of various embodiments. Combinations of the above embodiments, and other

embodiments not specifically described herein, will be apparent to those of skill in the art upon reviewing the above description.

**[0092]** The Abstract of the Disclosure is provided to comply with 37 C.F.R. §1.72(b), requiring an abstract that will allow the reader to quickly ascertain the nature of the technical disclosure. It is submitted with the understanding that it will not be used to interpret or limit the scope or meaning of the claims. In the foregoing Detailed Description, various features are grouped together in a single embodiment for the purpose of streamlining the disclosure. This method of disclosure is not to be interpreted to require more features than are expressly recited in each claim. Rather, inventive subject matter may be found in less than all features of a single disclosed embodiment. Thus the following claims are hereby incorporated into the Detailed Description, with each claim standing on its own as a separate embodiment.

METHOD, SYSTEM, AND APPARATUS FOR DERMATOLOGICAL TREATMENT

## Abstract of the Disclosure

Embodiments of dermatological cell treatment are described generally herein. Other embodiments may be described and claimed.

SUBSTITUTE SPECIFICATION – MARKED UP

UNITED STATES PATENT APPLICATION

# METHOD, SYSTEM, AND APPARATUS FOR DERMATOLOGICAL TREATMENT

**INVENTOR**

**Jongju Na of Republic of Korea**

Prepared by:

Merle W. Richman, Esq.
P.O. Box 3333
La Jolla, CA 92038-3333
ATTORNEY DOCKET NA001KR_US2

# METHOD, SYSTEM, AND APPARATUS FOR DERMATOLOGICAL TREATMENT

## Cross Reference to Related Applications

**[0001]** The present application is a continuation of US Application Number 13/825,083, entitled "METHOD, SYSTEM, AND APPARATUS FOR DERMALOGICAL TREATMENT", Attorney Docket No. NA001KR_US filed on January 20, 2014, which a National Stage entry of PCT/KR2012/001335, filed on February 22, 2012, which claims priority to US Application Number 61/449,080, entitled "METHOD, SYSTEM, AND APPARATUS FOR DERMALOGICAL TREATMENT", Attorney Docket No. NA001US1 filed on March 3, 2011 and US Application Number 13/060,274, Patent No. 8979912, entitled "METHOD, SYSTEM, AND APPARATUS FOR DERMALOGICAL TREATMENT", Attorney Docket No. NA001US filed on February 22, 2011, which is a National Stage entry of PCT Application Number PCT/US2008/074131, entitled "METHOD, SYSTEM, AND APPARATUS FOR DERMALOGICAL TREATMENT", Attorney Docket No. NA001PCT filed on August 22, 2008, which claims ~~the benefit of~~ priority to Republic of Korea Application Number 10-2008-0076993, entitled "Electrical system, skin, skin care and cosmetic electricity," filed on August 6, 2008, ~~PCT Application Number PCT/US2008/074131, entitled "METHOD, SYSTEM, AND APPARATUS FOR DERMATOLOGICAL TREATMENT", Attorney Docket No. NA001PCT filed on August 22, 2008, and US Application Number 13/060,274, entitled "METHOD, SYSTEM, AND APPARATUS FOR DERMATOLOGICAL TREATMENT", Attorney Docket No. NA001US filed on February 22, 2011,~~ the entirety of each is incorporated by reference.

## Technical Field

**[0002]** Various embodiments described herein relate generally to treating dermatological tissue, including systems, and methods used in treating dermatological tissue.

## Background Information

**[0003]** It may be desirable to treat dermatological tissue; the present invention provides such treatment.

## Brief Description of the Drawings

**[0004]** FIG. 1A is a simplified isometric diagram of a dermatological treatment apparatus according to various embodiments.

**[0005]** FIG. 1B is a simplified, side diagram of the dermatological treatment apparatus according to various embodiments.

**[0006]** FIG. 1C is a simplified, exploded layer view of the dermatological treatment apparatus according to various embodiments.

**[0007]** FIG. 1D is a simplified view of a layer of a dermatological treatment apparatus according to various embodiments.

**[0008]** FIG. 2A is a simplified isometric diagram of a dermatological treatment architecture according to various embodiments.

**[0009]** FIG. 2B is a simplified cross-sectional diagram of a dermatological treatment apparatus according to various embodiments.

**[0010]** FIG. 2C is a simplified cross-sectional diagram of another dermatological treatment apparatus according to various embodiments.

**[0011]** FIG. 2D is a simplified cross-sectional diagram of another dermatological treatment apparatus according to various embodiments.

**[0012]** FIG. 2E is a simplified view of a layer of a dermatological treatment apparatus according to various embodiments.

**[0013]** FIG. 2F is a simplified, exploded view of layers of the dermatological treatment apparatus according to various embodiments.

**[0014]** FIG. 3A is a simplified isometric diagram of a dermatological treatment apparatus according to various embodiments.

**[0015]** FIG. 3B is a simplified isometric diagram of another dermatological treatment apparatus according to various embodiments.

**[0016]** FIG. 4A is a simplified view of a layer of a dermatological treatment apparatus according to various embodiments.

**[0017]** FIG. 4B is a simplified view of a layer and apparatus of a dermatological treatment system according to various embodiments.

**[0018]** FIG. 4C is a simplified view of a layer and apparatus of a dermatological treatment system according to various embodiments.

**[0019]** FIGs. 5A-6 are diagrams of signals that may be applied to one or more dermatological treatment systems according to various embodiments.

**[0020]** FIG. 7A-7C are flow diagrams illustrating dermatological treatment system processing algorithms according to various embodiments.

**[0021]** FIG. 8 is a block diagram of an article according to various embodiments.

**[0022]** FIG. 9A is a simplified block diagram of a dermatological treatment architecture according to various embodiments.

**[0023]** FIG. 9B is a block diagram of an article according to various embodiments that may be employed in architecture of FIG. 9A.

**[0024]** FIG. 9C is a simplified cross-sectional diagram of a cartridge based dermatological treatment apparatus with the needles retracted according to various embodiments.

**[0025]** FIG. 9D is a simplified cross-sectional diagram of a cartridge based dermatological treatment apparatus with the needles deployed according to various embodiments.

**[0026]** FIG. 10A-10D are simplified, partial, cross-sectional diagrams of a cartridge in various stages of attachment to a dermatological treatment apparatus according to various embodiments.

**[0027]** FIG. 10E is a simplified, partial, cross-sectional diagram of a dermatological treatment apparatus with needles deployed according to various embodiments.

**[0028]** FIG. 10F is a simplified cross-sectional diagram of a cartridge based dermatological treatment apparatus cartridge interface according to various embodiments.

**[0029]** FIG. 11A is a simplified, partial, cross-sectional diagram of a dermatological treatment apparatus cartridge coupled to a handle with needles deployed according to various embodiments.

**[0030]** FIG. 11B is a simplified, cross-sectional diagram of a cartridge needle assembly according to various embodiments.

**[0031]** FIG. 11C is a simplified, cross-sectional, exploded diagram of a cartridge needle assembly according to various embodiments.

**[0032]** FIG. 12 is a flow diagram illustrating a dermatological treatment system processing algorithms according to various embodiments.

## Detailed Description

**[0033]** FIG. 1A is a simplified isometric diagram and FIG. 1B is a simplified side view of a dermatological treatment apparatus 10 according to various embodiments. The apparatus 10 may include a user handle 220 coupled to an acupuncture plate 200. In an embodiment the plate 200 may be elastically coupled to the handle segment 222 via an elastomeric section 210. The elastomeric section may be comprised of a combination of elastomeric materials and non-elastomeric materials. The elastomeric materials may include plastics, rubber (synthetic or natural), and spring(s).

**[0034]** FIG. 1C includes a simplified exploded view of an embodiment of an acupuncture plate 200 according to various embodiments. The plate 200 may include an upper, substantially rigid section or layer 290, deformable or elastic section 270 or layer, and acupuncture section or layer 250. The acupuncture section 250 may include a plurality of acupuncture pins or needles 230. FIG. 1D is a simplified bottom view of the plate 200 showing the location or holes 212 for the pins or needles 230. In an embodiment the plate 200 may have a rectangular cross section having a dimensional about 1 to 4 cm in width and about 1 to 6 cm in length. The plate 200 may any shape including circular, elliptical, polygon, or other shape where the shape may be particular to a dermatological area to be treated.

**[0035]** In an embodiment the plate may include about 140 pins or needles 230 uniformly separated. Each needle may be about 0.1 to 0.4 mm in diameter and 0.2 mm to 1.4 mm in length including 0.3 mm diameter and 0.8 mm in length in an embodiment. The elastic section or layer 270 may be comprised of a combination of elastomeric materials and non-elastomeric materials. The elastomeric materials may include plastics, rubber (synthetic or natural), and spring(s). The pin section ~~230~~ 250 may be coupled directly or indirectly to the upper section 290 via the elastic section ~~250~~270, including via glues, screws, welds, or other connection. In an embodiment the pin section 250 may include elastomers to enable at least partial deformation of the pin section 250 about the pins 230.

**[0036]** In operation a user may employ the apparatus 10 to create a plurality of micro-wounds or holes in dermatological layers of a mammal's 20 skin or dermis. The micro-wound or hole creation may improve the absorption or application of one or more chemicals applied on or about the micro-wounds or holes.

**[0037]** FIG. 2A is a simplified diagram of a dermatological treatment architecture 310 according to various embodiments. Architecture 310 includes an acupuncture apparatus 320 and an

electrical signal generation system 300. The electrical signal generation system 300 may be electrically coupled to the acupuncture apparatus 320 via one or more wires 300A and to a mammal 20 to be treated via one or more wires 300B. FIG. 2B is a simplified cross-sectional diagram of the acupuncture apparatus 320 according to various embodiments. The apparatus 320 may include a handle 330, elastic section 333, electrical interface 340, internal wire(s) 331and plate 350. The pins 351 may have a length A (0.3 mm to 2.1 mm in an embodiment) where at least one pin 351 is electrically coupled to the electrical interface 340 via the internal wire 331. The electrical interface 340 may be removably connected to the system 300 wire 300A.

**[0038]** The electrical signal generation system 300 may generate a variety of signals (such as shown in FIGS. 5A to 6) to vibrate one or more pins 351 electrically coupled to the system 300 via the internal wire 331 and lead 300A. A pin vibration 351 may increase the micro-wound or cut formed in dermis by the pin 351. FIG. 2C is a simplified cross-sectional diagram of an acupuncture apparatus 360 according to various embodiments. The apparatus 360 may include a handle 330, an elastic section 333, an electrical conductive interface 390, internal wire(s) 331, signal generator 370, switch 375, and plate 350. The signal generator 370 may be coupled to at least one pin 351 via internal wire 331 and coupled to the conductive interface 390.

**[0039]** The signal generator or module 370 may generate a variety of signals (such as shown in FIGS. 5A to 6) to vibrate one or more pins 351 electrically coupled to the system 300 via the internal wire 331 and the conductive interface 390. In operation a user 20 may touch the conductive interface 390 and place one or more electrically coupled pins 351 in contact with their dermis to form an electrical pathway from the pin 351 to the electrical conductive interface 390. The signal generator 370 may include a battery to supply energy to generate one or more electrical signals. The switch 375 coupled to the generator 370 may cause the generator to produce one or more electrical signals for a predetermined time interval or until the switch 375 is triggered again. As noted a pin vibration 351 may increase the micro-wound or cut formed in dermis by the pin 351.

**[0040]** FIG. 2D is a simplified cross-sectional diagram of an acupuncture apparatus 362 according to various embodiments. The apparatus 362 may include a handle 330, an elastic section 333, internal wire(s) 331, 332, signal generator 370, switch 375, and plate 350. The signal generator 370 may be coupled to at least one pin 351 via internal wire 331 and coupled to at least one other pin 352 via internal wire 332. When active the pins 351, 352 may form at least one dipole pair. The

signal generator or module 370 may generate a variety of signals (such as shown in FIGS. 5A to 6) to vibrate one or more dipole pair or bipolar pins 351, 352.

**[0041]** FIG. 2F includes a simplified exploded view of an embodiment of an acupuncture plate 350 including at least one electrically coupled pin 351 according to various embodiments. The plate 350 may include an upper, substantially rigid section or layer 357, deformable or elastic section 355 or layer, and acupuncture section or layer 353. The acupuncture section 353 may include a plurality of acupuncture pins or needles 351 where at least one pin 351 is electrically coupled to the wire 331. In a bipolar configuration a second wire 332 may be coupled to at least one other pin 351. FIG. 2E is a simplified bottom view of the plate 350 showing the pins or needles 359, 357 where the pins may be electrically coupled to a first wire 331 and a second wire 332 to form dipole pair (bipolar pins).

**[0042]** In an embodiment the plate 350 may have a rectangular cross section having a dimensional about 1 to 4 cm in width and about 1 to 6 cm in length. The plate 350 may any shape including circular, elliptical, polygon, or other shape where the shape may be particular to a dermatological area to be treated.

**[0043]** In an embodiment the plate may include about 140 pins or needles 351 uniformly separated. Each needle may be about 0.1 to 0.4 mm in diameter and 0.2 mm to 1.4 mm in length including 0.3 mm diameter and 0.8 mm in length in an embodiment. The elastic section or layer 355 may be comprised of a combination of elastomeric materials and non-elastomeric materials. The elastomeric materials may include plastics, rubber (synthetic or natural), and spring(s). The pin section 353 may be coupled directly or indirectly to the upper section 357 via the elastic section ~~353~~355, including via glues, screws, welds, or other connection. In an embodiment the pin section 353 may include elastomers to enable at least partial deformation of the pin section 353 about the pins 351.

**[0044]** FIGS. 3A and 3B are simplified isometric diagrams of acupuncture apparatus 400, 460 including at least one pin 451 that may be coupled to an electrical signal via an internal wire 458. Each apparatus 400, 460 includes curved roller 450 having a plurality of acupuncture pins 451 where the pins 451 may be similar to pins 351. In apparatus 400, the electrical lead wire ~~400A~~ 300A may be coupled to an electrical interface 410 in the apparatus handle 430 where the interface 410 is electrically coupled to the internal wire 458. In apparatus 460, the handle 430 may include a signal generator 470 similar to generator 370, switch 475, and conduction surface 490. Apparatus 460 may

operate similar to apparatus 360 in operation other than the rolling capability of the apparatus 460, 400. In an embodiment the rollers 450 may have various configurations to conform to a dermal area to be treated.

**[0045]** In any of the above apparatus 10, 320, 350, 360, 400, 460, the plate or roller 200, 350, 450 may include a plurality of embedded LEDs 32A, 32B, a battery 52, a controller 54, and an antenna 56 as shown in FIG. 4A. In an embodiment the LED 32A may be configured to emit energy of a first particular frequency range and the LED 32B may be configured to emit energy of a second particular frequency range. The surface 22 of a roller 450, plate 200, 350, 450 may also be embedded with a chemical 22A that may be used to treat dermatological cells. The chemical 22A may be reactive to the first and the second frequency ranges. Further dermatological cells may be reactive to the first and the second frequency ranges. In addition, the combination of the chemical 22A and the application of the first and the second frequency ranges to the chemical 22A and dermatological cells may have a synergetic effect.

**[0046]** In an embodiment the chemical 22A may be applied directly to the dermatological cells to be treated. In a further embodiment a chemical 22A may not be employed in addition to the apparatus 10, 320, 350, 360, 400, 460. In an embodiment the pin section 250, 353, may be translucent and comprised of polyurethane, medical silicon, or other pliable, translucent, hypoallergenic material.

**[0047]** In an embodiment the local controller 54 and battery 52 may also be embedded in the upper section 290, 357, pin section 230, 351, or the handle 220, 330, or separately between these sections. The controller 54 may be electrically coupled to the one or more ~~LEDS~~ LEDs 32A, 32B. The controller 54 may also be coupled to a battery 52. The controller 54 may generate one or more signals for LEDs 32A, 32B as a function of a user switch 75, 56. The signals may vary as a function of the first and second frequency ranges. The controller 54 may include one or more timers 58 that may limit the application of energy to the LEDs 32A, 32B to predetermined time intervals. In an embodiment the controller may also be coupled to an antenna 56 to receive or transmit one or more signals related to the transmission of energy to one or more LEDs 32A, 32B. In an embodiment the system 10 may be configured to treat a particular segment of dermatological cells such as a face. The apparatus 10 may be configured to conform to a user's anatomy so that emitted light is focused on dermatological cells. In another embodiment 200, the system 200 may be configured to treat

another anatomical region including dermatological cells on an arm, leg, chest, hands, feet, neck, or other region.

**[0048]** In an embodiment 510 shown in FIG. 4B, a controller 54, an antenna 104, and a power source 60 may be located ~~in~~ external to the apparatus 10, 320, 360. The power source 60 may be coupled to the controller 54. The controller 54 may be coupled to one or more LEDs 32A, 32B via one or more electric wires 106. The controller 54 may generate one or more signals for LEDs 32A, 32B as a function of the user switch 56. The signals may vary as a function of the first and second frequency ranges. The controller 54 may include one or more timers 58 that may limit the application of energy to the LEDs 32A, 32B to predetermined time intervals. In an embodiment the controller may also be coupled to an antenna 104 to receive or transmit one or more signals related to the transmission of energy to one or more LEDs 32A, 32B.

**[0049]** ~~In~~ As shown in FIG. 4C, in any of the above apparatus 10, 320, 350, 360, 400, 460, the plate or roller 200, 350, 450 may include a plurality of embedded LED lens 536, a fiber optic pathway 534, and an LED 532. In this embodiment, system 530 ~~the~~ LED 532 shown in FIG. 4C may be coupled to lens 536 via the fiber optic pathway 534. The controller 540 may generate an LED signal via the LED 532 that is transmitted to dermatological cells via the lens 536 and the fiber optic pathway 534.

**[0050]** FIGS.5A-5B are diagrams of electrical signal waveforms 650, 630, 640 that may be applied to one or more LEDs 32A, 32B, 532 and to the pins 230, 351, 451 according to various embodiments. The signal waveform 650 includes several square-wave pulses 652, 654, 656 that may be applied to an LED 32A, 32B, 532. Each pulse 652, 654, 656 may a have a similar magnitude and envelope. The waveform 650 may be used to energize an LED 32A, 32B, 532 and to the pins 230, 351, 451 periodically P1 for a predetermined interval T1 where each pulse 652, 654, 656 has a amplitude A1. In an embodiment, A1 may be about 0.1 milliamperes (mA) to 10 mA, the pulse width T1 may be about 100 microseconds (μs) to 500 μs and the period P1 may from 100 ms to 500 ms as a function of the energy required to create capacitance in a liquid. In another embodiment, A1 may be about 0.5 milliamperes (mA) to 5 mA, the pulse width T1 may be about 200 microsecond (μs) and the period P1 may about 250 ms as a function of the energy to drive an LED or cause one or more pins 230, 351, 451 to vibrate.

**[0051]** In FIG. 5B a signal waveform 630 may be applied to a first LED 32A, 32B, 532 module or group and to the pins 230, 351, 451 and a second waveform 640 may be applied or used

to energize a second LED 32A, 32B, 532 module and the pins 230, 351, 451, 352. The signal waveform 630 includes several square-wave pulses 632, 634, and 636 and the signal waveform 640 includes several square-wave pulses 642, 644, and 646. Each pulse 632, 634, 636, 642, 644, 646 may a have a similar magnitude and envelope. The waveform 630 may be used to energize a first LED 32A, 32B, 332 module and the pins 230, 351, 451 periodically P1 for a predetermined interval T1 where each pulse 632, 634, 636 has an amplitude A1. The waveform 640 may be used to energize a second LED 32A, 32B, 332 module and the pins 230, 351, 451 periodically P2 for a predetermined interval T2 where each pulse 642, 644, 646 has an amplitude B1. The pulse width T1, T2 may be about 100 microseconds (μs) to 500 μs and the period P1, P2 may from 100 ms to 500 ms as a function of the energy to affect dermatological cells or chemicals 22A. In another embodiment, A1, A2 may be about 0.5 milliamperes (mA) to 5 mA, the pulse width T1, T2 may be about 200 microsecond (μs) and the period P1, P2 may about 250 ms as a function of the energy required to affect dermatological cells or chemicals 22A. In an embodiment the pulses 632, 634, 636 do not substantially overlap the pulses 642, 644, 646. In an embodiment T1 > T2 and P2 is an integer multiple of P1.

**[0052]** FIG. 6 depicts a waveform 670 that includes multiple pulses 672, 674, 676, 678, 682, and 684 that may not overlap in the time or the frequency domain. In an embodiment each pulse 672, 674, 676, 678, 682, and 684 may have a pulse width T3, and frequency spectrum width F1 and period P3. The pulse 672 is frequency offset from the pulse 674, the pulse 676 is frequency offset from the pulse 678, and the pulse 682 is frequency offset from the pulse 684. The pulses 672, 674, 676, 678, 682, and 684 may be applied to an LED module to affect dermatological cells or chemicals 22A and the pins 230, 351, 451. Pulses 672, 674 having different frequency spectrums may enable different LED stimulation. In an embodiment the pulses 672, 676, 682 may be applied to a first LED module and the pulses 674, 678, 684 may be applied to a second LED module. The frequency separation between the respective pulses may enable simultaneous energization of a first and a second LED module and the pins 230, 351, 451 and subsequent and independent spectrum generation.

**[0053]** In an embodiment the invention may employ the algorithm 740 shown in FIG. 7A to apply therapy to dermatological cells. A user, clinician, or equipment may place an apparatus 10, 320, 360, 360, 400, 460 on dermatological cells to be treated (activity 741) including pressing the apparatus against the cells firmly enough to embed one or more pins 251, 351, 451 in the cells. A

first signal such as shown in FIGS. 5A, 5B, and 6 may be applied to a first LED module or group (32A) and the pins 230, 351, 451 of a dermatological apparatus 10, 320, 360, 360, 400, 460 (activity 742) for a predetermined time period (activity 744). A second signal such as shown in FIGS. 5A, 5B, and 6 may be applied to a second LED module or group (32B) and the pins 230, 351, 451 of a dermatological apparatus 10, 320, 360, 360, 400, 460 (activity 746) for a predetermined time period (activity 748). The signals applied to the groups may be selected to stimulate dermatological cells or chemicals 22A or cause vibration of one or more pins 251, 351, 451.

**[0054]** In another embodiment the invention may employ the algorithm 750 shown in FIG. 7B to apply therapy to dermatological cells. A user, clinician, or equipment may apply a light sensitive chemical on an apparatus 10, 320, 360, 360, 400, 460 or on dermatological cells to be treated (activity 751). The user, clinician, or equipment may place apparatus 10, 320, 360, 360, 400, 460 on dermatological cells to be treated (activity 752). A signal such as shown in FIGS. 5A, 5B, and 6 may be applied to a LED module or group (32A or 32B) and the pins 230, 351, 451 (activity 354) for a predetermined time period (activity 356).

**[0055]** In another embodiment the invention may employ the algorithm 760 shown in FIG. 7C to apply therapy to dermatological cells. A user, clinician, or equipment may apply a light sensitive chemical on an apparatus 10, 320, 360, 360, 400, 460 or on dermatological cells to be treated (activity 761). The user, clinician, or equipment may place an apparatus 10, 320, 360, 360, 400, 460 on dermatological cells to be treated (activity 762). A first signal such as shown in FIGS. 5A, 5B, and 6 may be applied to a first LED module or group (32A) and one or more pins 251, 351, 451 of a dermatological apparatus 10, 320, 360, 360, 400, 460 (activity 763) for a predetermined time period (activity 764). A second signal such as shown in FIGS. 5A, 5B, and 6 may be applied to a second LED module or group (32B) and one or more pins 251, 351, 451 of a dermatological apparatus 10, 320, 360, 360, 400, 460 (activity 766) for a predetermined time period (activity 768).

**[0056]** The apparatus 10, 320, 360, 360, 400, 460 may be used to employ cosmetic or medications or other chemicals directly on dermatological cells such as skin with the addition of light of specific frequencies for treatment and healing of epidermal cells of the skin or tissue below the skin with the object of assisting the agents used in delivery, uptake, action and function more effectively. The LEDs 32A, 32B may create the specific frequencies of light. The apparatus 10, 320, 360, 360, 400, 460, light application may enable cosmetic or medication or other active chemicals 22A on dermatological cells for longer time periods while preventing dehydration of the

applied substances. Such light application may improve the efficacy of cosmetic or medication or other active chemical as a function of the selected wavelengths or frequencies.

**[0057]** Further the dermatological system application may increase cellular activity and help heal tissue faster and facilitate the delivery, uptake and use in the cell of the cosmetics, medications, or chemicals 22A used. The LED light of specific frequencies may increase fibroblast production and collagen as well as other activities of the cell including stimulating the organelles and mitochondria to produce ATP for cell energy for functioning, decreasing treatment time and facilitate healing. The apparatus 10, 320, 360, 360, 400, 460 make the agents used on the body more efficacious and useful to the body on a cellular level.

**[0058]** The apparatus 10, 320, 360, 360, 400, 460 may stimulate the basic energy processes in the mitochondria (energy compartments) of each cell, particularly when near-infrared light is used to activate the color sensitive chemicals (chromophores, cytochrome systems) inside but not limited to these spectrum alone as the UV, other visible and IR spectrums may also be usable. In an embodiment optimal LED wavelengths for skin repair may include 640, 680, 730 nanometers (nm) wavelengths to IR 880 nm. Further application of blue light 400 nm to 490 via the apparatus 10, 320, 360, 360, 400, 460 may inhibit the growth and kill bacteria, fungus in and on dermatological cells. The apparatus 10, 320, 360, 360, 400, 460 may be employed to apply cosmetics, medications and/or other actives directly to the skin and maintain their presence long-term while using LED or other actinic light to increase their effect on the cells and tissue in the body. The apparatus 10, 320, 360, 360, 400, 460 are also highly portability and enable user mobility during treatment.

**[0059]** Chemicals 22A may include cosmetics, medications and other actives appropriate for dermatological cells including AHA's (alpha hydroxy acid), natural oils, aloe vera compounds, collagen boosters, bt, chitosan, daeses, endorphins, photodynamic drugs (PDT) like (Photofrin or ALA), vitamins A, C E or others, kojic acid, retinols or other exfoliant, salicylic acid, anti oxidants or other youth boosters and anti aging cosmetic or medications, antiseptic, antibiotics, anti-cancer agents, aroma therapy agents, fruit and vegetable extracts, anti-inflammatory agents, pain relievers, hormones, depilatories, and others, but the scope of this invention is not limited to these alone but can include any helpful medication, herbal formula or active compound for the skin and/or other tissues.

**[0060]** FIG. 8 is a block diagram of an article 780 according to various embodiments. The article 780 shown in FIG. 8 may be used in various embodiments as a part of apparatus 10, 320,

360, 360, 400, 460 where the article 780 may be any computing device including a personal data assistant, cellular telephone, laptop computer, or desktop computer. The article 780 may include a central processing unit (CPU) 782, a random access memory (RAM) 784, a read only memory (ROM") 806, a display 788, a user input device 812, a transceiver application specific integrated circuit (ASIC) 816, a digital to analog (D/A) and analog to digital (A/D) convertor 815, a microphone 808, a speaker 802, and an antenna 804. The CPU 782 may include an OS module 814 and an application module 813. The RAM 784 may include switches 56 and timers 58.

**[0061]** The ROM 806 is coupled to the CPU 782 and may store the program instructions to be executed by the CPU 782. The RAM 784 is coupled to the CPU 782 and may store temporary program data, overhead information, and the queues 798. The user input device 812 may comprise an input device such as a keypad, touch pad screen, track ball or other similar input device that allows the user to navigate through menus in order to operate the article 780. The display 788 may be an output device such as a CRT, LCD, LED or other lighting apparatus that enables the user to read, view, or hear user detectable signals.

**[0062]** The microphone 808 and speaker 802 may be incorporated into the device 780. The microphone 808 and speaker 802 may also be separated from the device 780. Received data may be transmitted to the CPU 782 via a bus 796 where the data may include signals for an LED 32A, 32B, 332 or optical module or wires 331, 458. The transceiver ASIC 816 may include an instruction set necessary to communicate data, screens, or signals. The ASIC 816 may be coupled to the antenna 804 to communicate wireless messages, pages, and signal information within the signal. When a message is received by the transceiver ASIC 816, its corresponding data may be transferred to the CPU 782 via the serial bus 796. The data can include wireless protocol, overhead information, and data to be processed by the device 780 in accordance with the methods described herein.

**[0063]** The D/A and A/D convertor 815 may be coupled to one or more optical modules to generate a signal to be used to energize one of the optical modules. The D/A and A/D convertor 815 may also be coupled to one devices such as LEDs 32A, 32B and the pins 251, 351, 451. Any of the components previously described can be implemented in a number of ways, including embodiments in software. Any of the components previously described can be implemented in a number of ways, including embodiments in software. Thus, the LEDs 32A, 32B, pins 251, 351, 451, controllers 54, switch 56, timers 58, controller 320 may all be characterized as "modules" herein. The modules may include hardware circuitry, single or multi-processor circuits, memory circuits, software

program modules and objects, firmware, and combinations thereof, as desired by the architect of the system 10, 30, 50, 60 and as appropriate for particular implementations of various embodiments.

**[0064]** FIG. 9A is a simplified block diagram of a dermatological treatment architecture (DTA) 900 according to various embodiments. As shown in FIG. 9A, architecture 900 includes a signal generation and control module (SGC) 910, a handle module 920, and an actuator module 930. In an embodiment the handle module 920 may include a deployable needle module 924 and a motor and LED module 922. In an embodiment the deployable needle module 924 may be releasably coupled to the motor and LED module 922. In a further embodiment the deployable needle module 924 may be a disposable cartridge module 924 to be removed and disposed after one or more treatments or for each patient, client, or user.

**[0065]** The SGC 910 may include one or more displays 912A, user input device 912B, handle module interface 914A, and actuator module interface 914C, electrical energy storage module 913, and one or more wheels 916A, 916B. In an embodiment the SGC 910 may be moveable and the wheels 916A, 916B may be lockable to prevent unintentional movement of the SGC 910 once positioned where desired by a user. In another embodiment the SGC 910 may also be coupled to the external power source including an alternating current (AC) grid source.

**[0066]** In an embodiment the displays 912A may indicate operational parameters for a hand module 920 to be coupled or coupled to the SGC 910. The displays 920 may be touch sensitive so a user may configure one or more operational parameters. In an embodiment the operational parameters may include electrical energy signal intensity to be applied the hand module 920, timing of such energy application, needle deployment timing and depth(s), LED intensity and timing, and number of cycles or shots to be conducted for each actuation via the actuator 930. In an embodiment the actuator 930 may be integral to the SGC 910 or a separate device wireless coupled or wired to the SGC 910 via a cable 914D and the SGC 910 actuator module interface 914C.

**[0067]** In an embodiment the actuator 930 may a mechanical device including a foot actuator or hand based actuator. The actuator 930 may also be an electronic device having an ASIC or running an application on a device (such as a computer, laptop, PDA, cellphone, or other electronic device) such as the module 780 shown in FIG. 8. In an embodiment the application may enable a user to set or control any of the possible operational parameters of the SGC 910 and initiate actuation a device 920 coupled to the SGC 910. FIG. 9B is a block diagram of a CPU module 911 that may be employed in the SGC 910 according to various embodiments.

**[0068]** The CPU module 911 may include a radio frequency (RF) signal generator (RFSG) module 911A, a needle deployment motor controller (NDMC) module 911B, and a photonic signal generator module (PSG) 911C. In an embodiment the photonic signal generator module 911C may be an LED signal generator or controller module 911C. In an embodiment a hand module 920 may include one or more photonic generation devices or modules (922I in FIG. 10A, 10B) where the PSG 911C may generate control or energy signals that cause the photonic modules 922I to generate photons of one or more frequencies with a desired intensity.

**[0069]** The NDMC 911B may control the deployment of one or more needles 924A of a deployable needle module 924 (FIG. 9C) based on one or more user selected operational parameters. The parameters may determine the depth and duty cycle related to the needle(s) 924A deployment in an embodiment. The signals generated by the NDMC 911B to control needle deployment may vary as a function of motor(s) (922A, FIG. 9C) employed to drive one or more needles 924A. As described above an electrical signal may also be applied to the needle(s) 924A to cause vibration of the needles or enable cutting, blending, and coagulation of the tissue in which the needles 924A are deployed. The RFSG 911A may generate one or more electrical signals to be applied to one or more needles 924A based on the selected operational parameters. An electrical signal may be applied to a single needle 924A, group of needles 924A (mono-polar configuration) or pair(s) of needles 924A (bipolar configuration) in an embodiment. In an embodiment the RFSG 911A may apply signals 650, 630, 640, 670 shown in FIGs. 5A, 5B, and 6, a combination thereof, or other signals.

**[0070]** In an embodiment the CPU module 911 via the RFSG 911A, NDMC 911B, and PSG 911C may create various therapy solutions including various combinations of photonic, electrical, and mechanical (needle deployment) therapy. In a further embodiment the CPU module 911 may control the generation of photonic energy to particular modules 922I, individual or group of needle(s) 924A deployment via one or more motors 922A, and control electrical signal(s) applied to individual or group of needles 924A. Accordingly the DTA 900 may apply various therapies based on user selections via the displays 912A, user selection device 912B, and actuator 930. The CPU 911 may employ the algorithm 930 (FIG. 12) or variations thereof to control the operation of the DTA 900.

**[0071]** FIG. 9C is a simplified cross-sectional diagram of a cartridge based dermatological treatment apparatus or hand module 920 with one or more needles 924A retracted according to

various embodiments. FIG. 9D is a simplified cross-sectional diagram of a cartridge based dermatological treatment apparatus or hand module 920 with one or more needles 924A deployed according to various embodiments. The handle module 920 may include a deployable needle module (DNM) 924 and a motor and LED module (MLM) 922. In an embodiment the DLM 924 may be a releasably couplable cartridge module. In a further embodiment the DLM 924 may be a detachable cartridge module (DCM) 924 where the DCM may be changed between therapy application(s) or client(s). In a further embodiment, the DCM 924 may be disposed after usage or cleaned via an autoclave or chemical process.

**[0072]** As shown in FIGs. 9C and 9D, the MLM 922 may include one or more motors 922A, longitudinally extendable drive arms 922B, drive shaft 922C, outer casing 922D, signal interface 922E, photonic generator module 922H, and DCM 924 interface 925 (shown in FIGs. 10A to 10F). The motor(s) 922A and photonic generator module 922H may be electrically coupled to the signal interface 922E to received control signals and energy to operate one or more motors 922A and photonic devices or modules 922I of the photonic generator module 922H. The drive arm(s) 922B may be coupled to one or more drive shafts 922C so the drive shafts may be moved longitudinally to deploy and retract one or more needles 924A when the MLM 922 is operatively coupled to the DNM 924.

**[0073]** As shown in FIGs. 9C and 9D the deployable needle module 924 may include at least one deployable needle 924A, MLM connecting arm and drive coupling tabs 924B, and MLM connecting/locking arms 924C. The MLM connecting/locking arms 924C may be configured to engage and lock to DCM 924 interface 925 recesses 925D (FIG. 10F). The MLM connecting arm and drive coupling tabs 924B may be configured to disengage connecting/locking arms 924C from the MLM interface 925 when the tabs 924B are depressed inward in an embodiment (as shown in FIG. 10B). The tabs 924B may further displace drive shaft connecting arms 924D (FIG. 10A) inward or centrally when the tabs 924B are depressed inwardly (as also shown in FIG. 10B). When the connecting/locking arms 924C are depressed inwardly or centrally (FIG. 9C and 9D) from an outward position (FIG. 10B). The arms 924C may engage the interface 925 recesses 925D to securely hold the DNM 924 to the MLM 922. The arms 924C may also displace the tabs 924B outwardly and cause the drive shaft connecting arms 924D to return outwardly.

**[0074]** The drive shaft connecting arms 924D may securely engage the drive shaft 922C tip 922F (FIG. 10E) recess 922G (FIG. 10E) when they return to an outward position as shown in FIG.

10D and 10E. In this configuration the DNM 924 is securely coupled to the MLM 922 via the arms 924C and 924D. In this configuration the motor(s) 922A via drive shaft(s) 922C coupled to the motor 922A shaft 922B may reliably drive one or more needles 924A of the DNM 924 (from a retracted or deployed position such as shown in FIGs. 9C and 9D, respectively). Further the motor(s) 922A may include steps or infinite drive extension 922B control to enable precise needle deployment depth or extension beyond the DNM 924 shell (924E, Fig. 10A).

**[0075]** FIG. 10A-10D are simplified, partial, cross-sectional diagrams of the DNM 924 in various stages of attachment to the MLM 922 via the arms 924C and 924D according to various embodiments. As shown in FIG. 10A the DNM or DCM 924 is decoupled from the MLM 922. The MLM 922 includes the photonic generator module (PGM) 922H, interface 925, and drive shaft tip 922F in a distal portion. As shown in FIG. 10A the PGM 922H may include one or more photon modules 922I. The photon modules 922I may be LED modules and emit photon with various frequencies and intensities based on the PSG 911C control signal.

**[0076]** As shown in FIG. 10A the DNM or DCM 924 may include the connecting arms 924C, deflecting tabs 924B, drive shaft coupling arms 924D, outer shell 924E, and one or more needles 924A. In an embodiment the drive shaft coupling arms 924D may include tabs that may securely engage the drive shaft tip 922F recess 922G. The drive shaft coupling arms 924D may be returnably deflectable inwardly (as shown in FIG. 10B) via inward depression of the tabs 924B. Such inward depression of the tabs 924B may deflect the coupling arms 924C outward. Similarly, inward depression of the coupling arms 924C to engage the interface 925 recesses 925D securely may deflect the tab arms 924B outwardly (relative the central axis of the DNM 920). Such outward movement may enable the drive shaft coupling arms 924D to return to a non-deflected state as shown in FIG. 10A.

**[0077]** In an embodiment a DNM or DCM 924 may be securely coupled to a MLM 922 by first completely compressing the arms or tabs 924B as shown in FIG. 10B. As noted above such inward compression may cause the coupling arms 924C to deflect outwardly and the drive shaft coupling arms 924D to be deflected inwardly towards each other. The drive shaft coupling arms 924D may be compressed so they may fit within the drive shaft 922C tip 922F recess 922G as the DNM or DCM 924 is advanced toward the MLM 922 distal end to securely couple the DNM 924 to the MLM 922 (as shown in FIG. 10D). After the DNM or DCM 924 is placed over the MLM 922 distal end so the drive shaft coupling arms 924D are located within the drive shaft 922C tip 922F

recess 922G and the coupling arms 924C are adjacent the MLM 922 interface 925 recesses 925D as shown in FIG. 10C.

**[0078]** To complete the coupling of a DNM 924 to the MLM 922, the coupling arms 924C may compressed inwardly as shown in FIG. 10D. The compression of the coupling arms 924C may deflect the tabs or arms 924B outwardly. Such outward deflection of the arms 924B may enable the drive shaft coupling arms 924D to return to a non-deflected state and securely engage the MLM 922 drive shaft 922C tip 922F recess 922G (as shown in FIG. 10D). In an embodiment a single coupling arm 924C, drive shaft coupling arm 924D, and tab 924B may be employed in an DNM 924. After the secure coupling of the DNM 924 to the MLM 922, the MLM 922 via the motor(s) 922A may ~~controllable~~ controllably deploy one or more needles 924A as shown in FIG. 10E. FIG. 10F is a simplified cross-sectional diagram of a DNM interface 925 according to various embodiments.

**[0079]** As noted the interface 925 may include one or more recesses 925D to be securely engaged to DNM 924 coupling arms 924C. The interface 925 may also include several fenestrations or openings 925A, 925B, 925C (FIG. 10F). The central fenestration 925A may be sized to enable passage of the MLM 922 drive shaft 922C tip 922F. The fenestrations 925C may be sized and located above one or more photon modules 922I to enable photons generated by the photon modules 922I to pass into the DNM 924. In an embodiment the DNM 924 outer casing 924E may be translucent and act as a waveguide to communicate photons to the needle area of the DNM 924. The fenestrations 925B may be sized and configured to enable electrical coupling pins 924G (FIG. 11A) passage from the DNM 924 to electrical couplings of the MLM 922. The pins 924G may communicate electrical signals from the RFSG 911A to one or more needles 924A via the wires 914B and MLM 922.

**[0080]** FIG. 11A is a simplified, partial, cross-sectional diagram of DNM 924 coupled to a MLM 922 with needles 924A deployed according to various embodiments. As shown in FIG. 11A, the DNM 924 may further include electrical coupling pins 924G set with a spring loaded base 924H (in an embodiment). As noted the pins 924G may extend to electrical contacts in the MLM 922 via the interface 925 fenestrations 925B. ~~Along~~ Although a pair of pins 924G is shown, one or more pins 924G may be employed in a DNM 924 according to various embodiments. A drive shaft coupling arm 924D may include an offset 924I where the offset may be configured to engage a tab or arm 924B.

**[0081]** As shown in FIG. 11A when the needle array or assemble 924F is deployed depression of the tabs 924B inwardly will not engage the drive shaft coupling arms 924D (via the offsets 924I). Such a configuration may prevent unintentional decoupling of the DNM 924 to the MLM 922 when the needle assembly 924F is at least partially deployed. As shown in FIG. 11A, the electrical contact pin 924G is sized to fit within the spring loaded based 924H. In an embodiment the internal spring 924M ~~is~~ (FIG. 11C) may force extension of the pin 924G to maintain electrical conduction with the MLM 922 as the needle assembly 924F is moved (recessed and deployed to various depths). FIG. 11B is a simplified, cross-sectional diagram of a DNM 924 needle assembly 924F according to various embodiments. FIG. 11C is a simplified, cross-sectional, exploded diagram of the DNM 924 needle assembly 924F according to various embodiments. As shown in FIGs. 11B and 11C, the needle assembly 924F may include a pin cover 924J, drive arm module 924L, needles 924A, pins 924G with bases 924H, and needle printed circuit board (PCB) 924K.

**[0082]** In an embodiment the PCB 924K may couple one or more needles 924A to a first pin 924G base 924H and another one or more needles 924A to another pin 924G based 924H. The first pin 924G and second pin 924H may couple alternating rows or columns of needles 924A to form one or more dipoles between such needles 924A. The drive shaft coupling arms 924D may have a base 924L where the cover 924J includes fenestrations for the needles 924A, a recess for the PCB 924K, and an outer recess for the coupling arm base 924L (as shown assembled in FIG. 11B).

**[0083]** FIG. 12 is a flow diagram illustrating a DTA 900 processing algorithms 930 according to various embodiments. As noted the DTA 900 SGC 911 RFSG 911A, NDMC 911B, and PSG 911C may enable a user or clinician to select a variety of operational parameters to deliver a desired combination of electrical, light (photonic), and mechanical (needle) therapy to dermatological tissue. In the algorithm 930, a user may select different operational modes including cut (activities 932A to 932F), blend (activities 934A to 934F), and coagulation (activities 936A to 936F) in an embodiment. In a cut operational mode, a user may select the electrical signal intensity (activity 932B) and application time (activity 932C). The CPU 911 may determine the total energy that will be applied for each activation based on the selected intensity and time (total fluence – activity 932D). Then, upon activation (activity 932E, 932F) the DTA 900 may energize the MLM 922 based on the operational parameters.

**[0084]** In a blend operational mode (activity 934A), a user may select the electrical signal intensity, start delay, and duty cycle (activity 934B) and needle deployment depth and number of

shots per activation (activity 934C). The duty cycle may include the delay before energy and ~~need~~ needle deployment, the time the energy and needles are deployed, and the subsequent off or rest time before the next possible duty cycle. As noted above the motor(s) 922A may enable precise needle extension (effective depth) control. In an embodiment the motor(s) 922A may include a transverse motor that converts rotational force to longitudinal force. The motor may be a Haydon model number: 21H4AB-05-049 having a motor speed of about 0.005mm/msec and motor power of about 1000 Hz approximately 40N (Newton) (described in detail at www.haydonkerk.com and whose specifications are incorporated by reference).

**[0085]** The CPU 911 may determine the total energy that will be applied for each activation based on the selected intensity and duty cycle (total fluence – activity 934D). Then, upon activation (activity 934E, 934F) the DTA 900 may energize the MLM 922 based on the operational parameters and deploy the needle assembly 924F to a desired extension beyond the DNM 924 shell 924E to enable a desired depth of needle 924A penetration within tissue when the shell 924E is placed adjacent the tissue.

**[0086]** In a coagulation operational mode (activity 936A), a user may select the electrical signal intensity and start delay (activity 936B) and needle deployment depth and number of shots per activation (activity 936C). As noted above the motor(s) 922A may enable precise needle extension (effective depth) control. The CPU 911 may determine the total energy that will be applied for each activation based on the selected intensity (total fluence – activity 936D). Then, upon activation (activity 936E, 936F) the DTA 900 may energize the MLM 922 based on the operational parameters and deploy the needle assembly 924F to a desired extension beyond the DNM 924 shell 924E to enable a desired depth of needle 924A penetration within tissue when the shell 924E is placed adjacent the tissue.

**[0087]** Applications that may include the novel apparatus and systems of various embodiments include electronic circuitry used in high-speed computers, communication and signal processing circuitry, modems, single or multi-processor modules, single or multiple embedded processors, data switches, and application-specific modules, including multilayer, multi-chip modules. Such apparatus and systems may further be included as sub-components within a variety of electronic systems, such as televisions, cellular telephones, personal computers (e.g., laptop computers, desktop computers, handheld computers, tablet computers, etc.), workstations, radios,

video players, audio players (e.g., mp3 players), vehicles, medical devices (e.g., heart monitor, blood pressure monitor, etc.) and others. Some embodiments may include a number of methods.

**[0088]** It may be possible to execute the activities described herein in an order other than the order described. Various activities described with respect to the methods identified herein can be executed in repetitive, serial, or parallel fashion.

**[0089]** A software program may be launched from a computer-readable medium in a computer-based system to execute functions defined in the software program. Various programming languages may be employed to create software programs designed to implement and perform the methods disclosed herein. The programs may be structured in an object-orientated format using an object-oriented language such as Java or C++. Alternatively, the programs may be structured in a procedure-orientated format using a procedural language, such as assembly or C. The software components may communicate using a number of mechanisms well known to those skilled in the art, such as application program interfaces or inter-process communication techniques, including remote procedure calls. The teachings of various embodiments are not limited to any particular programming language or environment.

**[0090]** The accompanying drawings that form a part hereof show, by way of illustration and not of limitation, specific embodiments in which the subject matter may be practiced. The embodiments illustrated are described in sufficient detail to enable those skilled in the art to practice the teachings disclosed herein. Other embodiments may be utilized and derived therefrom, such that structural and logical substitutions and changes may be made without departing from the scope of this disclosure. This Detailed Description, therefore, is not to be taken in a limiting sense, and the scope of various embodiments is defined only by the appended claims, along with the full range of equivalents to which such claims are entitled.

**[0091]** Such embodiments of the inventive subject matter may be referred to herein individually or collectively by the term “invention” merely for convenience and without intending to voluntarily limit the scope of this application to any single invention or inventive concept, if more than one is in fact disclosed. Thus, although specific embodiments have been illustrated and described herein, any arrangement calculated to achieve the same purpose may be substituted for the specific embodiments shown. This disclosure is intended to cover any and all adaptations or variations of various embodiments. Combinations of the above embodiments, and other

embodiments not specifically described herein, will be apparent to those of skill in the art upon reviewing the above description.

**[0092]** The Abstract of the Disclosure is provided to comply with 37 C.F.R. §1.72(b), requiring an abstract that will allow the reader to quickly ascertain the nature of the technical disclosure. It is submitted with the understanding that it will not be used to interpret or limit the scope or meaning of the claims. In the foregoing Detailed Description, various features are grouped together in a single embodiment for the purpose of streamlining the disclosure. This method of disclosure is not to be interpreted to require more features than are expressly recited in each claim. Rather, inventive subject matter may be found in less than all features of a single disclosed embodiment. Thus the following claims are hereby incorporated into the Detailed Description, with each claim standing on its own as a separate embodiment.

METHOD, SYSTEM, AND APPARATUS FOR DERMATOLOGICAL TREATMENT

## Abstract of the Disclosure

Embodiments of dermatological cell treatment are described generally herein. Other embodiments may be described and claimed.

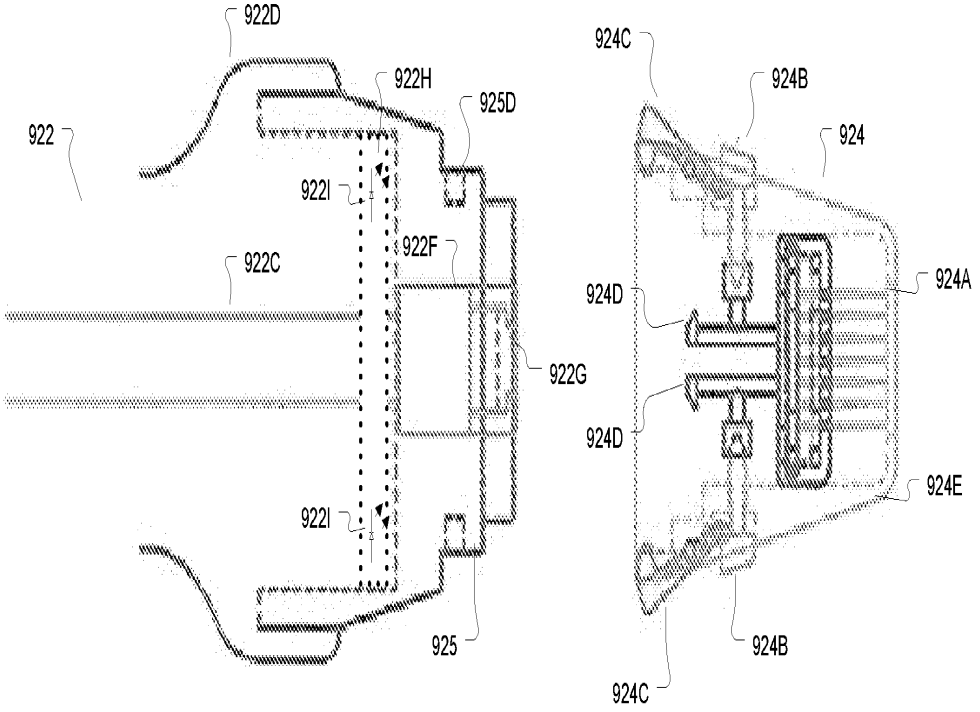


FIGURE 10A

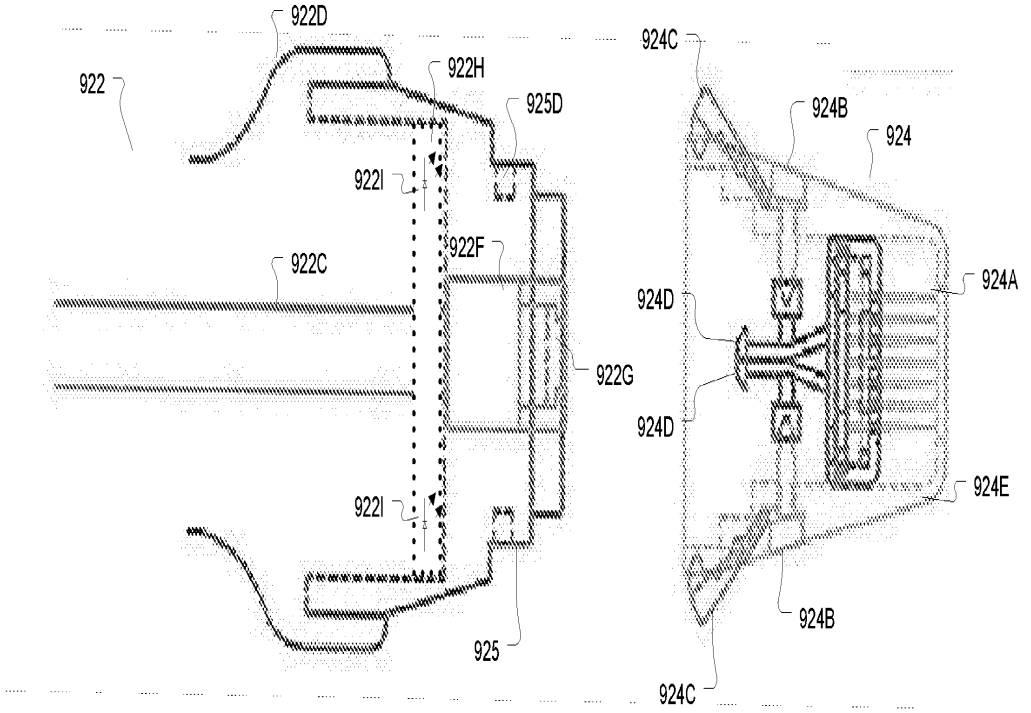


FIGURE 10B

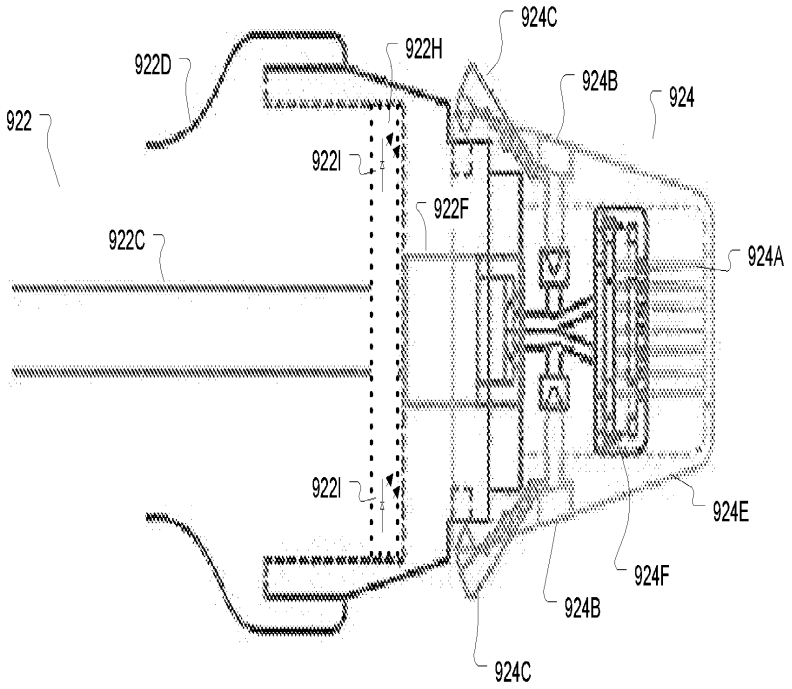


FIGURE 10C

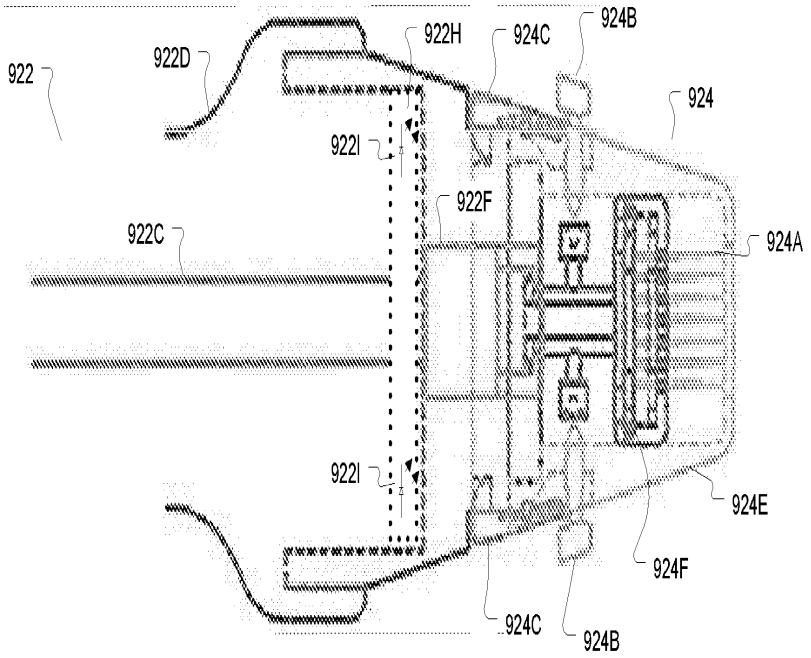


FIGURE 10D

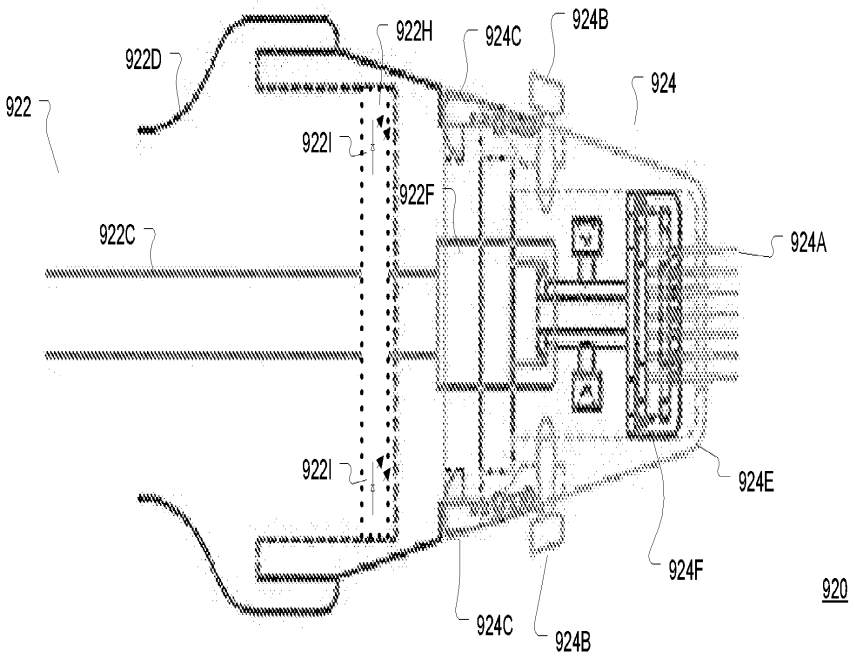


FIGURE 10E

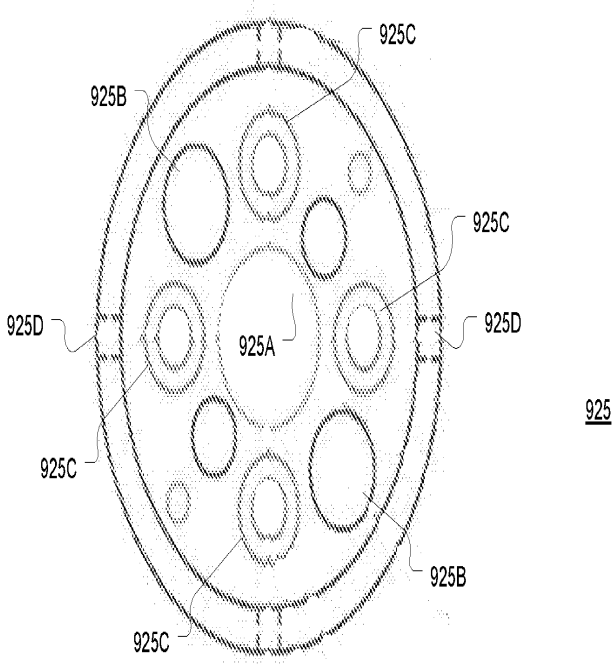


FIGURE 10F

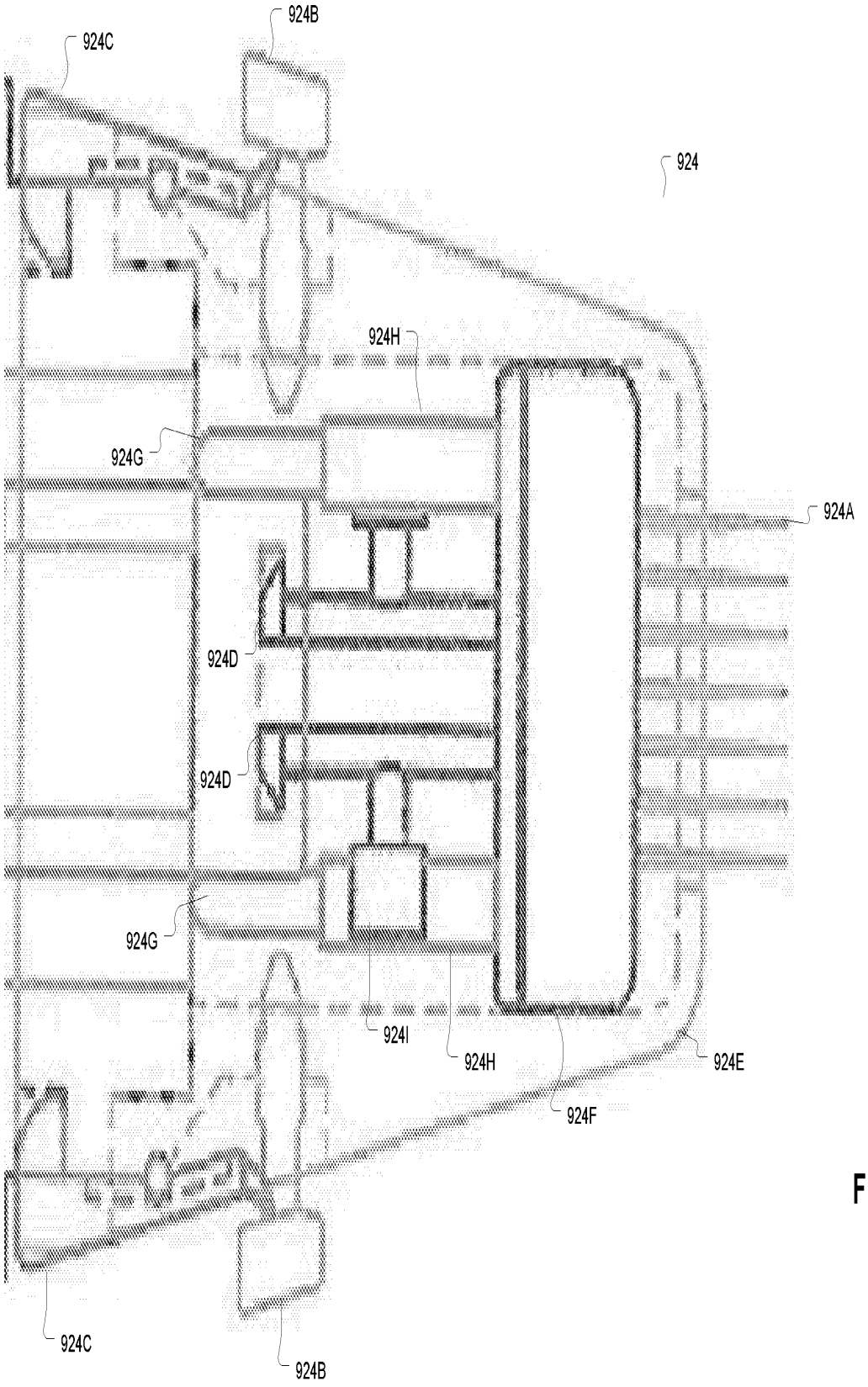
924B
924C
924
924H
924G
924A
924D
924D
924G
924I
924H
924E
924F
924C
924B

FIGURE 11A

# Electronic Patent Application Fee Transmittal

| | |
|---|---|
| **Application Number:** | 15096686 |
| **Filing Date:** | 12-Apr-2016 |
| **Title of Invention:** | Method, system, and apparatus for dermatological treatment |
| **First Named Inventor/Applicant Name:** | Jongju Na |
| **Filer:** | Merle W. Richman |
| **Attorney Docket Number:** | NA001KR_US2 |

Filed as Small Entity

**Filing Fees for Utility under 35 USC 111(a)**

| Description | Fee Code | Quantity | Amount | Sub-Total in USD($) |
|---|---|---|---|---|
| **Basic Filing:** | | | | |
| Utility filing Fee (Electronic filing) | 4011 | 1 | 70 | 70 |
| Utility Search Fee | 2111 | 1 | 300 | 300 |
| Utility Examination Fee | 2311 | 1 | 360 | 360 |
| **Pages:** | | | | |
| **Claims:** | | | | |
| **Miscellaneous-Filing:** | | | | |
| Late Filing Fee for Oath or Declaration | 2051 | 1 | 70 | 70 |
| **Petition:** | | | | |

| Description | Fee Code | Quantity | Amount | Sub-Total in USD($) |
|---|---|---|---|---|
| **Patent-Appeals-and-Interference:** | | | | |
| **Post-Allowance-and-Post-Issuance:** | | | | |
| **Extension-of-Time:** | | | | |
| Extension - 2 months with $0 paid | 2252 | 1 | 300 | 300 |
| **Miscellaneous:** | | | | |
| | | **Total in USD ($)** | | **1100** |

# Electronic Acknowledgement Receipt

| | |
|---|---|
| **EFS ID:** | 26777154 |
| **Application Number:** | 15096686 |
| **International Application Number:** | |
| **Confirmation Number:** | 2620 |
| **Title of Invention:** | Method, system, and apparatus for dermatological treatment |
| **First Named Inventor/Applicant Name:** | Jongju Na |
| **Customer Number:** | 26338 |
| **Filer:** | Merle W. Richman |
| **Filer Authorized By:** | |
| **Attorney Docket Number:** | NA001KR_US2 |
| **Receipt Date:** | 29-AUG-2016 |
| **Filing Date:** | 12-APR-2016 |
| **Time Stamp:** | 16:44:59 |
| **Application Type:** | Utility under 35 USC 111(a) |

## Payment information:

| | |
|---|---|
| Submitted with Payment | yes |
| Payment Type | CARD |
| Payment was successfully received in RAM | $1100 |
| RAM confirmation Number | 083016INTEFSW16500400 |
| Deposit Account | 3280 |
| Authorized User | Merle Richman |
| The Director of the USPTO is hereby authorized to charge indicated fees and credit any overpayment as follows: | |

## File Listing:

| Document Number | Document Description | File Name | File Size(Bytes)/ Message Digest | Multi Part /.zip | Pages (if appl.) |
|---|---|---|---|---|---|
| 1 | Applicant Response to Pre-Exam Formalities Notice | na001kr_us2-Informalities.pdf | 74513<br>a7bd0c3341eafeb7cab6550d72ce310db3b2d0fb | no | 1 |
| **Warnings:** | | | | | |
| **Information:** | | | | | |
| 2 | Specification | na001kr_us2-application-clean.pdf | 162249<br>8c7ab7cc9532c02905ed24d87d8dbf392bb13f1d | no | 24 |
| **Warnings:** | | | | | |
| **Information:** | | | | | |
| 3 | Specification | na001kr_us2-application-marked-up.pdf | 164255<br>0527f72de1e9abf754fc81d46c202414d031ea30 | no | 24 |
| **Warnings:** | | | | | |
| **Information:** | | | | | |
| 4 | Drawings-only black and white line drawings | na001kr_us2-replacement-pages.pdf | 1058737<br>f2c9d04e795e4f54ed5f070ea3bde1c598a73264 | no | 4 |
| **Warnings:** | | | | | |
| **Information:** | | | | | |
| 5 | Fee Worksheet (SB06) | fee-info.pdf | 38779<br>aad7d6665eebbfdc15bb6b8ad79c3c4f540473e5 | no | 2 |
| **Warnings:** | | | | | |
| **Information:** | | | | | |
| | | **Total Files Size (in bytes):** | 1498533 | | |

**This Acknowledgement Receipt evidences receipt on the noted date by the USPTO of the indicated documents, characterized by the applicant, and including page counts, where applicable. It serves as evidence of receipt similar to a Post Card, as described in MPEP 503.**

**New Applications Under 35 U.S.C. 111**

**If a new application is being filed and the application includes the necessary components for a filing date (see 37 CFR 1.53(b)-(d) and MPEP 506), a Filing Receipt (37 CFR 1.54) will be issued in due course and the date shown on this Acknowledgement Receipt will establish the filing date of the application.**

**National Stage of an International Application under 35 U.S.C. 371**

**If a timely submission to enter the national stage of an international application is compliant with the conditions of 35 U.S.C. 371 and other applicable requirements a Form PCT/DO/EO/903 indicating acceptance of the application as a national stage submission under 35 U.S.C. 371 will be issued in addition to the Filing Receipt, in due course.**

**New International Application Filed with the USPTO as a Receiving Office**

**If a new international application is being filed and the international application includes the necessary components for an international filing date (see PCT Article 11 and MPEP 1810), a Notification of the International Application Number and of the International Filing Date (Form PCT/RO/105) will be issued in due course, subject to prescriptions concerning national security, and the date shown on this Acknowledgement Receipt will establish the international filing date of the application.**

**IN THE UNITED STATES PATENT AND TRADEMARK OFFICE**

| | |
|---|---|
| Applicant(s): Na | |
| Application No.: 15096686 | |
| Filed: 4/12/2016 | Art Unit: 3769 |
| Title: METHOD, SYSTEM, AND APPARATUS FOR DERMATOLOGICAL TREATMENT | |
| Attorney Docket No.: NA001KR_US2 | |

**RESPONSE TO NOTICE TO FILE MISSING PARTS OF APPLICATION**

Commissioner for Patents
P.O. Box 1450
Alexandria, VA 22313-1450

Sir:

This is in response to a Notice to File Missing Parts of Application under 37 CFR 1.53(f). Enclosed is a copy of said Notice and the following documents and fees to complete the filing requirements of the above-identified application.

(X) Please replace pages 16-19 of the drawings with attached replacement pages and disregard drawings filed earlier today.

( ) Statutory basic filing fee (X) Utility ( ) Design

( ) Missing Parts Surcharge $70.00

( ) A Petition for Extension of Time for reply to Notice of Missing Parts is attached.
- ( ) one month ($100.00)
- ( ) two months ($300.00)
- ( ) three months ($700.00)
- ( ) four months ($1100.00)

I hereby certify that this Correspondence is being deposited with the Unitec States Postal service with sufficient postage for first class mail in an envelope addressed to the Commissioner for Patents, P.O. Box 1450, Alexandria, VA 22313-1450, or the correspondence is being facsimile transmitted to the USPTO, on the date indicated below.

Date of Deposit: August 29, 2016

Typed Name: Merle W Richman

Signature: /mwresq/_____

Respectfully submitted,

By /mwresq/_____
Merle Richman, Patent Attorney

Reg No. 38282

Date: August 29, 2016

Telephone No. 858 320-2030

# Electronic Acknowledgement Receipt

| | |
|---|---|
| **EFS ID:** | 26779097 |
| **Application Number:** | 15096686 |
| **International Application Number:** | |
| **Confirmation Number:** | 2620 |
| **Title of Invention:** | Method, system, and apparatus for dermatological treatment |
| **First Named Inventor/Applicant Name:** | Jongju Na |
| **Customer Number:** | 26338 |
| **Filer:** | Merle W. Richman |
| **Filer Authorized By:** | |
| **Attorney Docket Number:** | NA001KR_US2 |
| **Receipt Date:** | 29-AUG-2016 |
| **Filing Date:** | 12-APR-2016 |
| **Time Stamp:** | 18:23:09 |
| **Application Type:** | Utility under 35 USC 111(a) |

## Payment information:

| | |
|---|---|
| Submitted with Payment | no |

## File Listing:

| Document Number | Document Description | File Name | File Size(Bytes)/ Message Digest | Multi Part /.zip | Pages (if appl.) |
|---|---|---|---|---|---|
| 1 | Drawings-only black and white line drawings | na001kr_us2-replacement-pages-ii.pdf | 1906421<br>5ae673eb5be1c2df561e102d8d82f1fc7d93382f | no | 4 |

**Warnings:**

| Information: | | | | | |
|---|---|---|---|---|---|
| 2 | Applicant Response to Pre-Exam Formalities Notice | na001kr_us2-response-missing-parts-ii.pdf | 74888<br>1dea54a0e1fbb85c003c9bfccc88706d6cb5ed7a | no | 1 |
| **Warnings:** | | | | | |
| **Information:** | | | | | |
| | | | **Total Files Size (in bytes):** | 1981309 | |

**This Acknowledgement Receipt evidences receipt on the noted date by the USPTO of the indicated documents, characterized by the applicant, and including page counts, where applicable. It serves as evidence of receipt similar to a Post Card, as described in MPEP 503.**

**New Applications Under 35 U.S.C. 111**

**If a new application is being filed and the application includes the necessary components for a filing date (see 37 CFR 1.53(b)-(d) and MPEP 506), a Filing Receipt (37 CFR 1.54) will be issued in due course and the date shown on this Acknowledgement Receipt will establish the filing date of the application.**

**National Stage of an International Application under 35 U.S.C. 371**

**If a timely submission to enter the national stage of an international application is compliant with the conditions of 35 U.S.C. 371 and other applicable requirements a Form PCT/DO/EO/903 indicating acceptance of the application as a national stage submission under 35 U.S.C. 371 will be issued in addition to the Filing Receipt, in due course.**

**New International Application Filed with the USPTO as a Receiving Office**

**If a new international application is being filed and the international application includes the necessary components for an international filing date (see PCT Article 11 and MPEP 1810), a Notification of the International Application Number and of the International Filing Date (Form PCT/RO/105) will be issued in due course, subject to prescriptions concerning national security, and the date shown on this Acknowledgement Receipt will establish the international filing date of the application.**

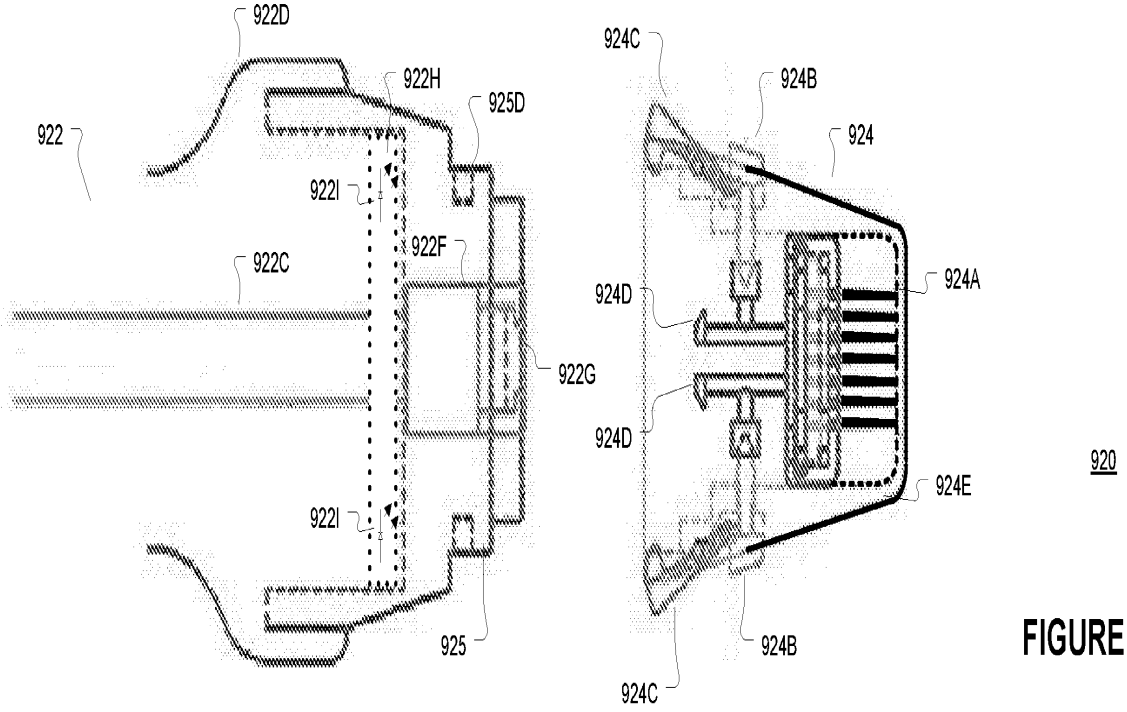


FIGURE 10A

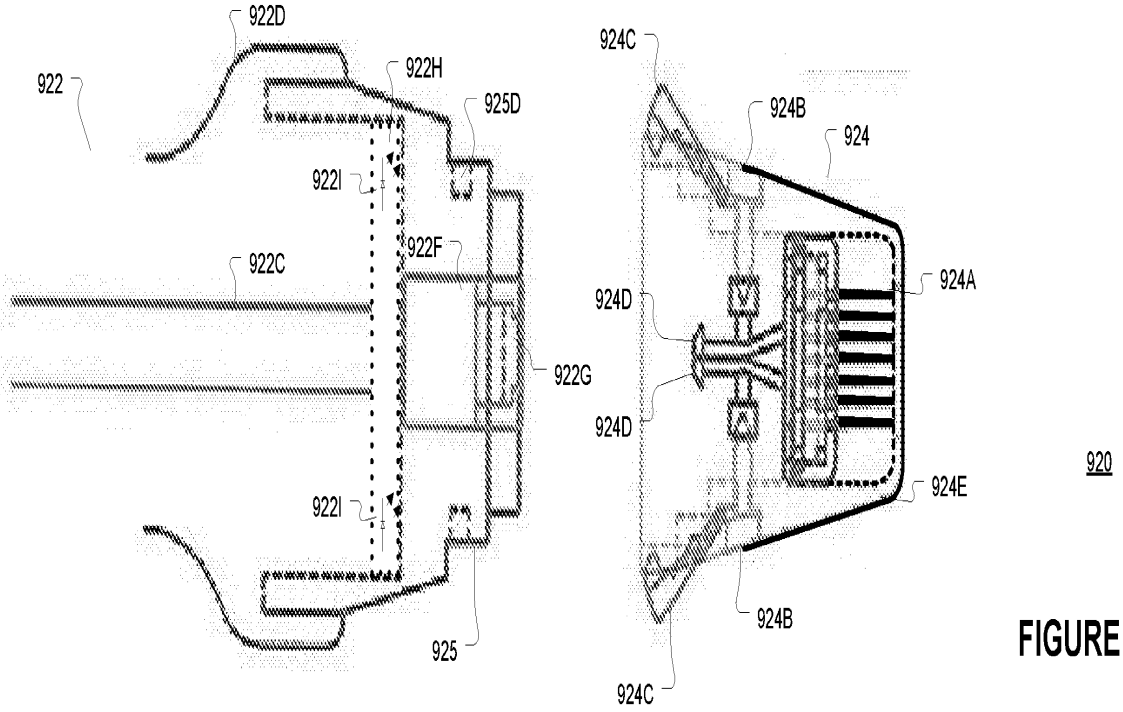


FIGURE 10B

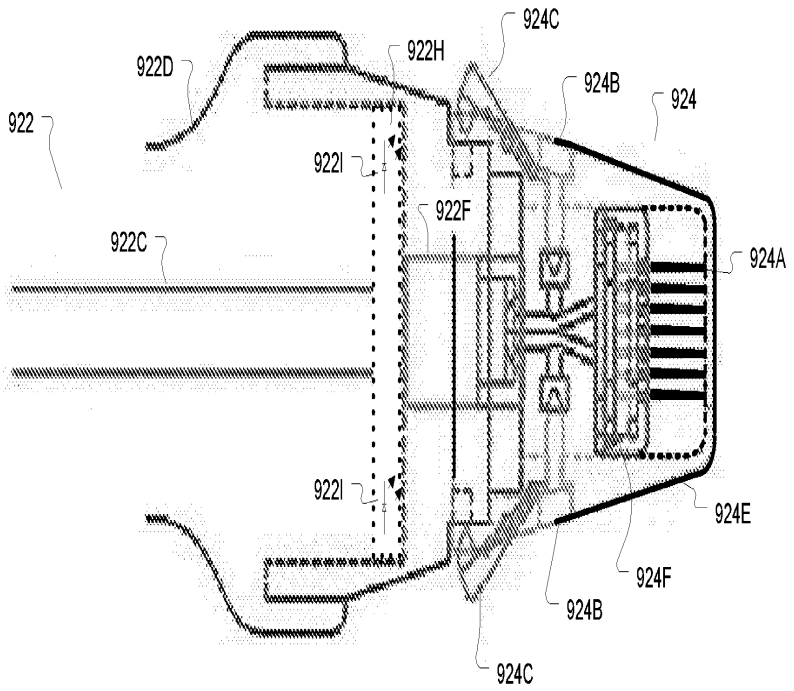


FIGURE 10C

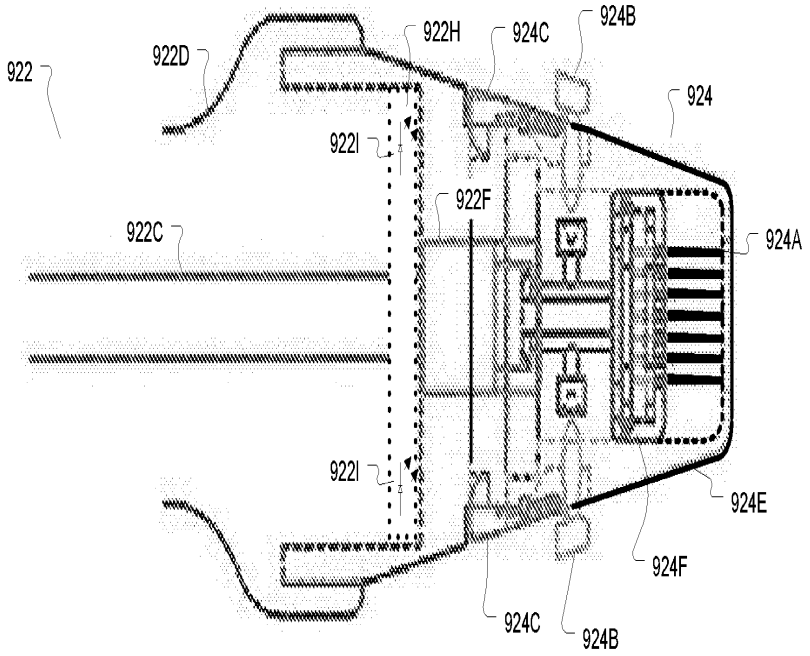


FIGURE 10D

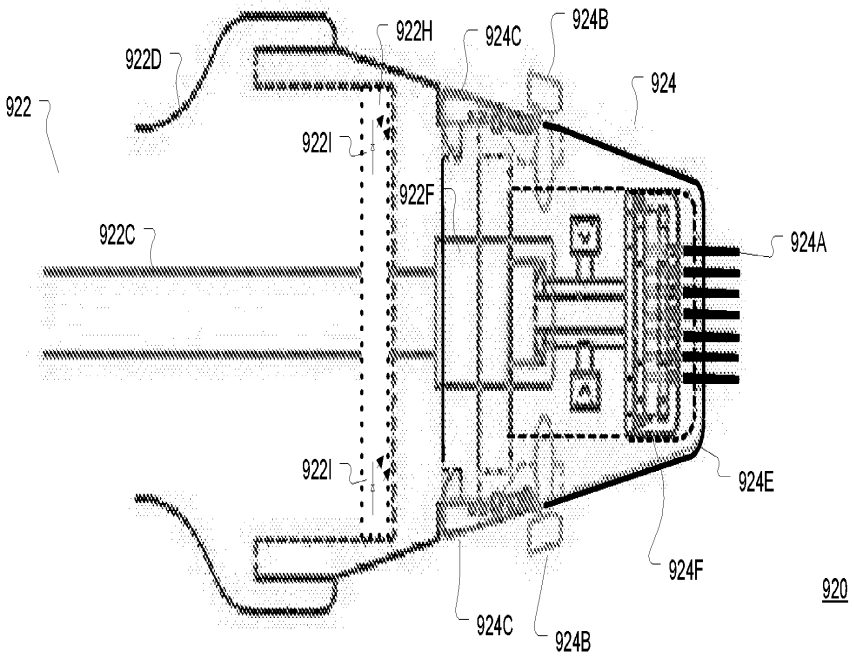


FIGURE 10E

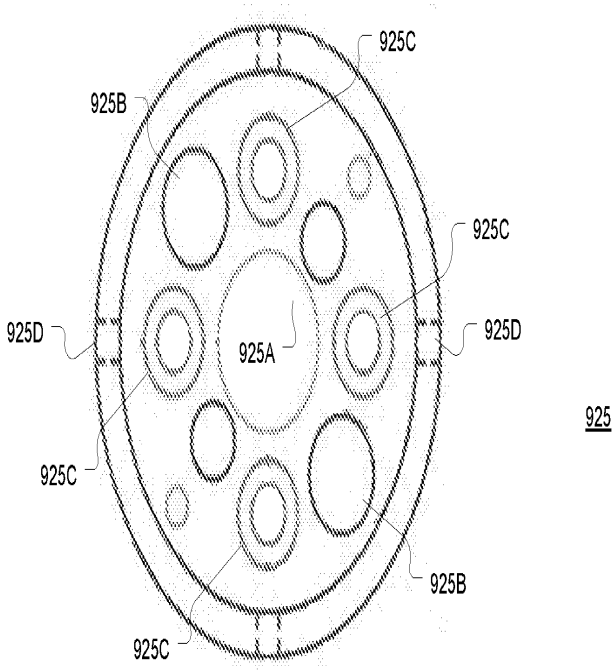


FIGURE 10F

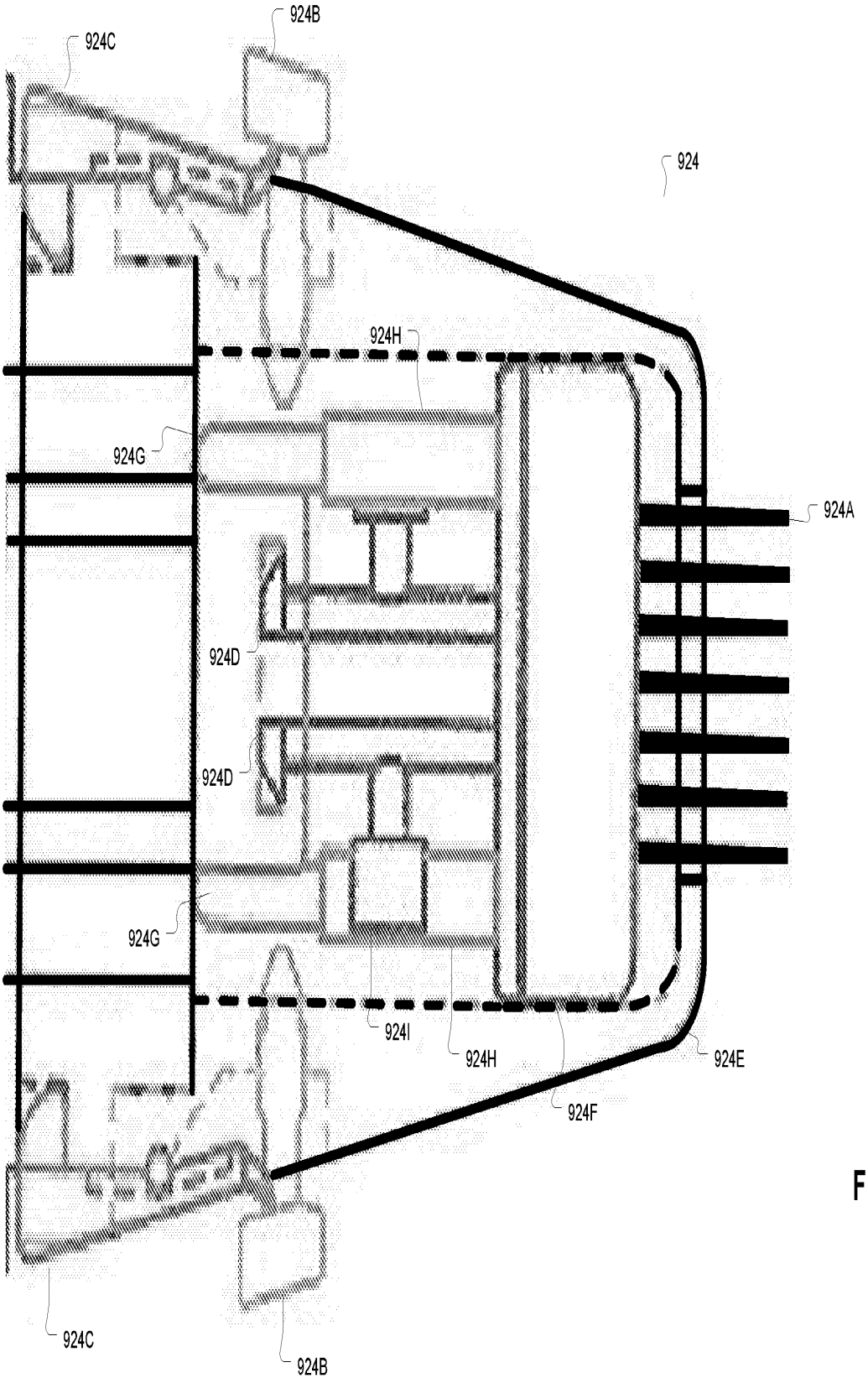
924B
924C
924
924H
924G
924A
924D
924D
924G
924I
924H
924E
924F
924C
924B

FIGURE 11A

# PATENT APPLICATION FEE DETERMINATION RECORD

Substitute for Form PTO-875

Application or Docket Number: 15/096,686

## APPLICATION AS FILED - PART I

| FOR | (Column 1) NUMBER FILED | (Column 2) NUMBER EXTRA | SMALL ENTITY RATE($) | SMALL ENTITY FEE($) | OR | OTHER THAN SMALL ENTITY RATE($) | OTHER THAN SMALL ENTITY FEE($) |
|---|---|---|---|---|---|---|---|
| BASIC FEE (37 CFR 1.16(a), (b), or (c)) | N/A | N/A | N/A | 70 | | N/A | |
| SEARCH FEE (37 CFR 1.16(k), (i), or (m)) | N/A | N/A | N/A | 300 | | N/A | |
| EXAMINATION FEE (37 CFR 1.16(o), (p), or (q)) | N/A | N/A | N/A | 360 | | N/A | |
| TOTAL CLAIMS (37 CFR 1.16(i)) | 20 minus 20 = | * | x 40 = | 0.00 | OR | | |
| INDEPENDENT CLAIMS (37 CFR 1.16(h)) | 2 minus 3 = | * | x 210 = | 0.00 | | | |
| APPLICATION SIZE FEE (37 CFR 1.16(s)) | If the specification and drawings exceed 100 sheets of paper, the application size fee due is $310 ($155 for small entity) for each additional 50 sheets or fraction thereof. See 35 U.S.C. 41(a)(1)(G) and 37 CFR 1.16(s). | | | 0.00 | | | |
| MULTIPLE DEPENDENT CLAIM PRESENT (37 CFR 1.16(j)) | | | | 0.00 | | | |
| * If the difference in column 1 is less than zero, enter "0" in column 2. | | | TOTAL | 730 | | TOTAL | |

## APPLICATION AS AMENDED - PART II

### AMENDMENT A

| | (Column 1) CLAIMS REMAINING AFTER AMENDMENT | | (Column 2) HIGHEST NUMBER PREVIOUSLY PAID FOR | (Column 3) PRESENT EXTRA | SMALL ENTITY RATE($) | SMALL ENTITY ADDITIONAL FEE($) | OR | OTHER THAN SMALL ENTITY RATE($) | OTHER THAN SMALL ENTITY ADDITIONAL FEE($) |
|---|---|---|---|---|---|---|---|---|---|
| Total (37 CFR 1.16(i)) | * | Minus | ** | = | x = | | OR | x = | |
| Independent (37 CFR 1.16(h)) | * | Minus | *** | = | x = | | OR | x = | |
| Application Size Fee (37 CFR 1.16(s)) | | | | | | | | | |
| FIRST PRESENTATION OF MULTIPLE DEPENDENT CLAIM (37 CFR 1.16(j)) | | | | | | | OR | | |
| | | | | | TOTAL ADD'L FEE | | OR | TOTAL ADD'L FEE | |

### AMENDMENT B

| | (Column 1) CLAIMS REMAINING AFTER AMENDMENT | | (Column 2) HIGHEST NUMBER PREVIOUSLY PAID FOR | (Column 3) PRESENT EXTRA | RATE($) | ADDITIONAL FEE($) | | RATE($) | ADDITIONAL FEE($) |
|---|---|---|---|---|---|---|---|---|---|
| Total (37 CFR 1.16(i)) | * | Minus | ** | = | x = | | OR | x = | |
| Independent (37 CFR 1.16(h)) | * | Minus | *** | = | x = | | OR | x = | |
| Application Size Fee (37 CFR 1.16(s)) | | | | | | | | | |
| FIRST PRESENTATION OF MULTIPLE DEPENDENT CLAIM (37 CFR 1.16(j)) | | | | | | | OR | | |
| | | | | | TOTAL ADD'L FEE | | OR | TOTAL ADD'L FEE | |

* If the entry in column 1 is less than the entry in column 2, write "0" in column 3.

** If the "Highest Number Previously Paid For" IN THIS SPACE is less than 20, enter "20".

*** If the "Highest Number Previously Paid For" IN THIS SPACE is less than 3, enter "3".

The "Highest Number Previously Paid For" (Total or Independent) is the highest found in the appropriate box in column 1.

UNITED STATES PATENT AND TRADEMARK OFFICE

UNITED STATES DEPARTMENT OF COMMERCE
United States Patent and Trademark Office
Address: COMMISSIONER FOR PATENTS
P.O. Box 1450
Alexandria, Virginia 22313-1450
www.uspto.gov

| APPLICATION NUMBER | FILING or 371(c) DATE | GRP ART UNIT | FIL FEE REC'D | ATTY.DOCKET.NO | TOT CLAIMS | IND CLAIMS |
|---|---|---|---|---|---|---|
| 15/096,686 | 04/12/2016 | 3769 | 800 | NA001KR_US2 | 20 | 2 |

**CONFIRMATION NO. 2620**

**UPDATED FILING RECEIPT**

26338
MERLE W. RICHMAN, III
P.O. BOX 3333
LA JOLLA, CA 92038

OC000000085621982

Date Mailed: 09/07/2016

Receipt is acknowledged of this non-provisional patent application. The application will be taken up for examination in due course. Applicant will be notified as to the results of the examination. Any correspondence concerning the application must include the following identification information: the U.S. APPLICATION NUMBER, FILING DATE, NAME OF APPLICANT, and TITLE OF INVENTION. Fees transmitted by check or draft are subject to collection. Please verify the accuracy of the data presented on this receipt. **If an error is noted on this Filing Receipt, please submit a written request for a Filing Receipt Correction. Please provide a copy of this Filing Receipt with the changes noted thereon. If you received a "Notice to File Missing Parts" for this application, please submit any corrections to this Filing Receipt with your reply to the Notice. When the USPTO processes the reply to the Notice, the USPTO will generate another Filing Receipt incorporating the requested corrections**

**Inventor(s)**

Jongju Na, Songpa-Gu, KOREA, REPUBLIC OF;

**Applicant(s)**

Jongju Na, Songpa-Gu, KOREA, REPUBLIC OF;

**Power of Attorney:** None

**Domestic Priority data as claimed by applicant**

This application is a CON of 13/825,083 01/20/2014 PAT 9320536 *
which is a 371 of PCT/KR2012/001335 02/22/2012
which claims benefit of 61/449,080 03/03/2011
and is a CON of 13/060,274 03/30/2011 PAT 8979912 *
which is a 371 of PCT/US08/74131 08/22/2008
(*)Data provided by applicant is not consistent with PTO records.

**Foreign Applications** (You may be eligible to benefit from the **Patent Prosecution Highway** program at the USPTO. Please see http://www.uspto.gov for more information.)
REPUBLIC OF KOREA 10-2008-0076993 08/06/2008

**Permission to Access Application via Priority Document Exchange:** Yes

**Permission to Access Search Results:** No

Applicant may provide or rescind an authorization for access using Form PTO/SB/39 or Form PTO/SB/69 as appropriate.

Request to Retrieve - This application either claims priority to one or more applications filed in an intellectual property Office that participates in the Priority Document Exchange (PDX) program or contains a proper **Request to Retrieve Electronic Priority Application(s)** (PTO/SB/38 or its equivalent). Consequently, the USPTO will attempt to electronically retrieve these priority documents.

**If Required, Foreign Filing License Granted:** 04/27/2016
The country code and number of your priority application, to be used for filing abroad under the Paris Convention, is **US 15/096,686**
**Projected Publication Date:** 12/15/2016
**Non-Publication Request:** No
**Early Publication Request:** No
**** SMALL ENTITY ****
**Title**

Method, system, and apparatus for dermatological treatment

**Preliminary Class**

606

**Statement under 37 CFR 1.55 or 1.78 for AIA (First Inventor to File) Transition Applications:** Yes

## PROTECTING YOUR INVENTION OUTSIDE THE UNITED STATES

Since the rights granted by a U.S. patent extend only throughout the territory of the United States and have no effect in a foreign country, an inventor who wishes patent protection in another country must apply for a patent in a specific country or in regional patent offices. Applicants may wish to consider the filing of an international application under the Patent Cooperation Treaty (PCT). An international (PCT) application generally has the same effect as a regular national patent application in each PCT-member country. The PCT process **simplifies** the filing of patent applications on the same invention in member countries, but **does not result** in a grant of "an international patent" and does not eliminate the need of applicants to file additional documents and fees in countries where patent protection is desired.

Almost every country has its own patent law, and a person desiring a patent in a particular country must make an application for patent in that country in accordance with its particular laws. Since the laws of many countries differ in various respects from the patent law of the United States, applicants are advised to seek guidance from specific foreign countries to ensure that patent rights are not lost prematurely.

Applicants also are advised that in the case of inventions made in the United States, the Director of the USPTO must issue a license before applicants can apply for a patent in a foreign country. The filing of a U.S. patent application serves as a request for a foreign filing license. The application's filing receipt contains further information and guidance as to the status of applicant's license for foreign filing.

Applicants may wish to consult the USPTO booklet, "General Information Concerning Patents" (specifically, the section entitled "Treaties and Foreign Patents") for more information on timeframes and deadlines for filing foreign patent applications. The guide is available either by contacting the USPTO Contact Center at 800-786-9199, or it can be viewed on the USPTO website at http://www.uspto.gov/web/offices/pac/doc/general/index.html.

For information on preventing theft of your intellectual property (patents, trademarks and copyrights), you may wish to consult the U.S. Government website, http://www.stopfakes.gov. Part of a Department of Commerce initiative, this website includes self-help "toolkits" giving innovators guidance on how to protect intellectual property in specific

countries such as China, Korea and Mexico. For questions regarding patent enforcement issues, applicants may call the U.S. Government hotline at 1-866-999-HALT (1-866-999-4258).

## LICENSE FOR FOREIGN FILING UNDER

## Title 35, United States Code, Section 184

## Title 37, Code of Federal Regulations, 5.11 & 5.15

**GRANTED**

The applicant has been granted a license under 35 U.S.C. 184, if the phrase "IF REQUIRED, FOREIGN FILING LICENSE GRANTED" followed by a date appears on this form. Such licenses are issued in all applications where the conditions for issuance of a license have been met, regardless of whether or not a license may be required as set forth in 37 CFR 5.15. The scope and limitations of this license are set forth in 37 CFR 5.15(a) unless an earlier license has been issued under 37 CFR 5.15(b). The license is subject to revocation upon written notification. The date indicated is the effective date of the license, unless an earlier license of similar scope has been granted under 37 CFR 5.13 or 5.14.

This license is to be retained by the licensee and may be used at any time on or after the effective date thereof unless it is revoked. This license is automatically transferred to any related applications(s) filed under 37 CFR 1.53(d). This license is not retroactive.

The grant of a license does not in any way lessen the responsibility of a licensee for the security of the subject matter as imposed by any Government contract or the provisions of existing laws relating to espionage and the national security or the export of technical data. Licensees should apprise themselves of current regulations especially with respect to certain countries, of other agencies, particularly the Office of Defense Trade Controls, Department of State (with respect to Arms, Munitions and Implements of War (22 CFR 121-128)); the Bureau of Industry and Security, Department of Commerce (15 CFR parts 730-774); the Office of Foreign AssetsControl, Department of Treasury (31 CFR Parts 500+) and the Department of Energy.

**NOT GRANTED**

No license under 35 U.S.C. 184 has been granted at this time, if the phrase "IF REQUIRED, FOREIGN FILING LICENSE GRANTED" DOES NOT appear on this form. Applicant may still petition for a license under 37 CFR 5.12, if a license is desired before the expiration of 6 months from the filing date of the application. If 6 months has lapsed from the filing date of this application and the licensee has not received any indication of a secrecy order under 35 U.S.C. 181, the licensee may foreign file the application pursuant to 37 CFR 5.15(b).

---

## *SelectUSA*

The United States represents the largest, most dynamic marketplace in the world and is an unparalleled location for business investment, innovation, and commercialization of new technologies. The U.S. offers tremendous resources and advantages for those who invest and manufacture goods here. Through SelectUSA, our nation works to promote and facilitate business investment. SelectUSA provides information assistance to the international investor community; serves as an ombudsman for existing and potential investors; advocates on behalf of U.S. cities, states, and regions competing for global investment; and counsels U.S. economic development organizations on investment attraction best practices. To learn more about why the United States is the best country in the world to develop

technology, manufacture products, deliver services, and grow your business, visit http://www.SelectUSA.gov or call +1-202-482-6800.

UNITED STATES PATENT AND TRADEMARK OFFICE

UNITED STATES DEPARTMENT OF COMMERCE
United States Patent and Trademark Office
Address: COMMISSIONER FOR PATENTS
P.O. Box 1450
Alexandria, Virginia 22313-1450
www.uspto.gov

| APPLICATION NUMBER | FILING OR 371(C) DATE | FIRST NAMED APPLICANT | ATTY. DOCKET NO./TITLE |
|---|---|---|---|
| 15/096,686 | 04/12/2016 | Jongju Na | NA001KR_US2 |

**CONFIRMATION NO. 2620**

26338
MERLE W. RICHMAN, III
P.O. BOX 3333
LA JOLLA, CA 92038

**INFORMAL NOTICE**

*OC000000085621983*

Date Mailed: 09/07/2016

## INFORMATIONAL NOTICE TO APPLICANT

Applicant is notified that the above-identified application contains the deficiencies noted below. No period for reply is set forth in this notice for correction of these deficiencies. However, if a deficiency relates to the inventor's oath or declaration, the applicant must file an oath or declaration in compliance with 37 CFR 1.63, or a substitute statement in compliance with 37 CFR 1.64, executed by or with respect to each actual inventor no later than the expiration of the time period set in the "Notice of Allowability" to avoid abandonment. See 37 CFR 1.53(f).

The item(s) indicated below are also required and should be submitted with any reply to this notice to avoid further processing delays.

- A properly executed inventor's oath or declaration has not been received for the following inventor(s):
  Jongju Na

Questions about the contents of this notice and the requirements it sets forth should be directed to the Office of Data Management, Application Assistance Unit, at **(571) 272-4000** or **(571) 272-4200** or **1-888-786-0101**.

/nbekele/

# SCORE Placeholder Sheet for IFW Content

Application Number: 15096686 Document Date: 08/29/2016

The presence of this form in the IFW record indicates that the following document type was received in electronic format on the date identified above. This content is stored in the SCORE database.

- Drawings – Other than Black and White Line Drawings

Since this was an electronic submission, there is no physical artifact folder, no artifact folder is recorded in PALM, and no paper documents or physical media exist. The TIFF images in the IFW record were created from the original documents that are stored in SCORE.

To access the documents in the SCORE database, refer to instructions below.

At the time of document entry (noted above):

- Examiners may access SCORE content via the eDAN interface.
- Other USPTO employees can bookmark the current SCORE URL (http://Score.uspto.gov/ScoreAccessWeb/).
- External customers may access SCORE content via the Public and Private PAIR interfaces.

UNITED STATES PATENT AND TRADEMARK OFFICE

UNITED STATES DEPARTMENT OF COMMERCE
United States Patent and Trademark Office
Address: COMMISSIONER FOR PATENTS
P.O. Box 1450
Alexandria, Virginia 22313-1450
www.uspto.gov

| APPLICATION NUMBER | FILING OR 371(C) DATE | FIRST NAMED APPLICANT | ATTY. DOCKET NO./TITLE |
|---|---|---|---|
| 15/096,686 | 04/12/2016 | Jongju Na | NA001KR_US2 |

**CONFIRMATION NO. 2620**

**INFORMAL NOTICE**

26338
MERLE W. RICHMAN, III
P.O. BOX 3333
LA JOLLA, CA 92038

*OC000000085621983*

Date Mailed: 09/07/2016

# INFORMATIONAL NOTICE TO APPLICANT

Applicant is notified that the above-identified application contains the deficiencies noted below. No period for reply is set forth in this notice for correction of these deficiencies. However, if a deficiency relates to the inventor's oath or declaration, the applicant must file an oath or declaration in compliance with 37 CFR 1.63, or a substitute statement in compliance with 37 CFR 1.64, executed by or with respect to each actual inventor no later than the expiration of the time period set in the "Notice of Allowability" to avoid abandonment. See 37 CFR 1.53(f).

The item(s) indicated below are also required and should be submitted with any reply to this notice to avoid further processing delays.

- A properly executed inventor's oath or declaration has not been received for the following inventor(s):
  Jongju Na

Questions about the contents of this notice and the requirements it sets forth should be directed to the Office of Data Management, Application Assistance Unit, at **(571) 272-4000** or **(571) 272-4200** or **1-888-786-0101**.

/nbekele/

Doc Code: TRAN.LET
Document Description: Transmittal Letter

PTO/SB/21 (07-09)
Approved for use through 07/31/2012. OMB 0651-0031
U.S. Patent and Trademark Office; U.S. DEPARTMENT OF COMMERCE
Under the Paper Reduction Act of 1995, no persons are required to respond to a collection of information unless it displays a valid OMB control number.

| **TRANSMITTAL FORM** *(to be used for all correspondence after initial filing)* | | Application Number | 15096686 |
|---|---|---|---|
| | | Filing Date | Apr 12, 2016 |
| | | First Named Inventor | Na, Jongju |
| | | Art Unit | |
| | | Examiner Name | |
| Total Number of Pages in This Submission | | Attorney Docket Number | NA001KR_US2 |

## ENCLOSURES *(Check all that apply)*

- ☐ Fee Transmittal Form
  - ☐ Fee Attached
- ☐ Amendment / Reply
  - ☐ After Final
  - ☐ Affidavits/declaration(s)
- ☐ Extension of Time Request
- ☐ Express Abandonment Request
- ☐ Information Disclosure Statement
- ☐ Certified Copy of Priority Document(s)
- ☐ Reply to Missing Parts/ Incomplete Application
  - ☐ Reply to Missing Parts under 37 CFR 1.52 or 1.53
- ☐ Drawing(s)
- ☐ Licensing-related Papers
- ☐ Petition
- ☐ Petition to Convert to a Provisional Application
- ☐ Power of Attorney, Revocation Change of Correspondence Address
- ☐ Terminal Disclaimer
- ☐ Request for Refund
- ☐ CD, Number of CD(s) _____
  - ☐ Landscape Table on CD
- ☐ After Allowance communication to TC
- ☐ Appeal Communication to Board of Appeals and Interferences
- ☐ Appeal Communication to TC **(Appeal Notice, Brief, Reply Brief)**
- ☐ Proprietary Information
- ☐ Status Letter
- ☒ Other Enclosure(s) (please identify below):

Executed declaration in response to informational notice.

Remarks

## SIGNATURE OF APPLICANT, ATTORNEY, OR AGENT

| Firm Name | Merle W. Richman, Cust ID - 26338 | | |
|---|---|---|---|
| Signature | /mwresq/ | | |
| Printed name | Merle Richman | | |
| Date | September 19, 2016 | Reg. No. | 38282 |

## CERTIFICATE OF TRANSMISSION/MAILING

I hereby certify that this correspondence is being electronically transmitted to the USPTO or deposited with the United States Postal Service with sufficient postage as first class mail in an envelope addressed to: Commissioner for Patents, P.O. Box 1450, Alexandria, VA 22313-1450 on the date shown below.

| Signature | /mwresq/ | | |
|---|---|---|---|
| Typed or printed name | Merle Richman | Date | September 19, 2016 |

This collection of information is required by 37 CFR 1.5. The information is required to obtain or retain a benefit by the public which is to file (and by the USPTO to process) an application. Confidentiality is governed by 35 U.S.C. 122 and 37 CFR 1.11 and 1.14. This collection is estimated to take 2 hours to complete, including gathering, preparing, and submitting the completed application form to the USPTO. Time will vary depending upon the individual case. Any comments on the amount of time you require to complete this form and/or suggestions for reducing this burden, should be sent to the Chief Information Officer, U.S. Patent and Trademark Office, U.S. Department of Commerce, P.O. Box 1450, Alexandria, VA 22313-1450. DO NOT SEND FEES OR COMPLETED FORMS TO THIS ADDRESS. **SEND TO: Commissioner for Patents, P.O. Box 1450, Alexandria, VA 22313-1450.**

*In you need assistance in completing the form, call 1-800-PTO-9199 and select option 2.*

# Electronic Acknowledgement Receipt

| | |
|---|---|
| **EFS ID:** | 26967577 |
| **Application Number:** | 15096686 |
| **International Application Number:** | |
| **Confirmation Number:** | 2620 |
| **Title of Invention:** | Method, system, and apparatus for dermatological treatment |
| **First Named Inventor/Applicant Name:** | Jongju Na |
| **Customer Number:** | 26338 |
| **Filer:** | Merle W. Richman |
| **Filer Authorized By:** | |
| **Attorney Docket Number:** | NA001KR_US2 |
| **Receipt Date:** | 19-SEP-2016 |
| **Filing Date:** | 12-APR-2016 |
| **Time Stamp:** | 16:23:32 |
| **Application Type:** | Utility under 35 USC 111(a) |

## Payment information:

| | |
|---|---|
| Submitted with Payment | no |

## File Listing:

| Document Number | Document Description | File Name | File Size(Bytes)/ Message Digest | Multi Part /.zip | Pages (if appl.) |
|---|---|---|---|---|---|
| 1 | Oath or Declaration filed | na001kr_us2_declaration_executed.pdf | 107251<br>e7df63cecdabf63e26e7a1767c6d0d37a56d43d5 | no | 1 |

**Warnings:**

| | | | | | |
|---|---|---|---|---|---|
| **Information:** | | | | | |
| 2 | Applicant Response to Pre-Exam Formalities Notice | na001kr_us2-correct-declaration-request.pdf | 123435<br>7f2a77226f99ab30317c05e70bdcad415dbead84 | no | 1 |
| **Warnings:** | | | | | |
| **Information:** | | | | | |
| 3 | Applicant Response to Pre-Exam Formalities Notice | na001kr_us2-declaration-transmittal-v2.pdf | 111408<br>79cca3a2a3130a308ee376de94680f24064ea145 | no | 1 |
| **Warnings:** | | | | | |
| **Information:** | | | | | |
| | | | **Total Files Size (in bytes):** | 342094 | |

**This Acknowledgement Receipt evidences receipt on the noted date by the USPTO of the indicated documents, characterized by the applicant, and including page counts, where applicable. It serves as evidence of receipt similar to a Post Card, as described in MPEP 503.**

**New Applications Under 35 U.S.C. 111**

**If a new application is being filed and the application includes the necessary components for a filing date (see 37 CFR 1.53(b)-(d) and MPEP 506), a Filing Receipt (37 CFR 1.54) will be issued in due course and the date shown on this Acknowledgement Receipt will establish the filing date of the application.**

**National Stage of an International Application under 35 U.S.C. 371**

**If a timely submission to enter the national stage of an international application is compliant with the conditions of 35 U.S.C. 371 and other applicable requirements a Form PCT/DO/EO/903 indicating acceptance of the application as a national stage submission under 35 U.S.C. 371 will be issued in addition to the Filing Receipt, in due course.**

**New International Application Filed with the USPTO as a Receiving Office**

**If a new international application is being filed and the international application includes the necessary components for an international filing date (see PCT Article 11 and MPEP 1810), a Notification of the International Application Number and of the International Filing Date (Form PCT/RO/105) will be issued in due course, subject to prescriptions concerning national security, and the date shown on this Acknowledgement Receipt will establish the international filing date of the application.**

PTO/AIA/01 (06-12)
Approved for use through 01/31/2014. OMB 0651-0032
U.S. Patent and Trademark Office; U.S. DEPARTMENT OF COMMERCE
Under the Paperwork Reduction Act of 1995, no persons are required to respond to a collection of information unless it displays a valid OMB control number.

# DECLARATION (37 CFR 1.63) FOR UTILITY OR DESIGN APPLICATIONS USING AN APPLICATION DATA SHEET (37 CFR 1.76)

| **Title of Invention** | METHOD, SYSTEM, AND APPARATUS FOR DERMATOLOGICAL TREATMENT |
|---|---|

As the below named inventor, I hereby declare that:

This declaration is directed to:

[ ] The attached application, or

[X] United States application or PCT international application number 15096686 filed on 4/12/2016.

The above-identified application was made or authorized to be made by me.

I believe that I am the original inventor or an original joint inventor of a claimed invention in the application.

I hereby acknowledge that any willful false statement made in this declaration is punishable under 18 U.S.C. 1001 by fine or imprisonment of not more than five (5) years, or both.

## WARNING:

Petitioner/applicant is cautioned to avoid submitting personal information in documents filed in a patent application that may contribute to identity theft. Personal information such as social security numbers, bank account numbers, or credit card numbers (other than a check or credit card authorization form PTO-2038 submitted for payment purposes) is never required by the USPTO to support a petition or an application. If this type of personal information is included in documents submitted to the USPTO, petitioners/applicants should consider redacting such personal information from the documents before submitting them to the USPTO. Petitioner/applicant is advised that the record of a patent application is available to the public after publication of the application (unless a non-publication request in compliance with 37 CFR 1.213(a) is made in the application) or issuance of a patent. Furthermore, the record from an abandoned application may also be available to the public if the application is referenced in a published applications or an issued patent (see 37 CFR 1.14). Checks and credit card authorization forms PTO-2038 submitted for payment purposes are not retained in the application file and therefore are not publicly available.

LEGAL NAME OF INVENTOR

Inventor: Jongju Na Date (Optional): 09/17/2016

Signature: 

Note: An application data sheet (PTO/SB/14 or equivalent), including naming the entire inventive entity, must accompany this form. Use an additional PTO/AIA/01 form for each additional inventor.

This collection of information is required by 35 U.S.C. 115 and 37 CFR 1.63. The information is required to obtain or retain a benefit by the public which is to file (and by the USPTO to process) an application. Confidentiality is governed by 35 U.S.C. 122 and 37 CFR1.11 and 1.14. This collection is estimated to take 1 minute to complete, including gathering, preparing, and submitting the completed application form to the USPTO. Time will vary depending upon the individual case. Any comment on the amount of time you required to complete this form and/or suggestions for reducing this burden, should be sent to the Chief Information Officer, U.S. Patent and Trademark Office, U.S. Department of Commerce, P.O. Box 1450, Alexandria, VA 22313-1450. DO NOT SEND FEES OR COMPLETED FORMS TO THIS ADDRESS. **SEND TO: Commissioner for Patents, P.O. Box 1450, Alexandria, VA 22313-1450.**

*If you need assistance in completing the form, call 1-800-PTO-9199 and select option 2.*

# 대한민국 특허청
# KOREAN INTELLECTUAL PROPERTY OFFICE

**별첨 사본은 아래 출원의 원본과 동일함을 증명함.**

**This is to certify that the following application annexed hereto is a true copy from the records of the Korean Intellectual Property Office.**

출 원 번 호 : 10-2008-0076993
Application Number

출 원 년 월 일 : 2008년 08월 06일
Filing Date AUG. 06, 2008

출 원 인 : 라종주
Applicant(s) NA Jong Ju

2016년 09월 21일

특 허 청
COMMISSIONER

제출 일자 : 2008-08-06

【서지사항】

【서류명】 특허출원서

【출원구분】 특허출원

【출원인】

【성명】 라종주

【특허고객번호】 4-2007-017445-9

【대리인】

【명칭】 특허법인 맥

【대리인번호】 9-2003-100064-5

【지정된변리사】 홍재일, 홍종원, 이은욱, 박천수, 박혜성, 김현호

【포괄위임등록번호】 2007-034893-7

【발명의 국문명칭】 전기 피부 미용기 및 전기 피부 미용 시스템

【발명의 영문명칭】 Electric Skin Treatment Device and Electric Skin Treatment System

【발명자】

【성명】 라종주

【특허고객번호】 4-2007-017445-9

【심사청구】 청구

【취지】 위와 같이 특허청장에게 제출합니다.

대리인 특허법인 맥 (인)

【수수료】

| | | | |
|---|---|---|---|
| 【출원료】 | 0 | 면 | 38,000 원 |
| 【가산출원료】 | 20 | 면 | 0 원 |
| 【우선권주장료】 | 0 | 건 | 0 원 |
| 【심사청구료】 | 5 | 항 | 269,000 원 |

제출 일자 : 2008-08-06

【합계】 307,000 원

【감면사유】 개인(70%감면)

【감면후 수수료】 92,100 원

제출 일자 : 2008-08-06

【요약서】

【요약】

전기 피부 미용기 및 전기 피부 미용 시스템이 개시된다. 본 발명은, 환자의 피부에 접촉되어 회전되는 롤러부, 롤러부를 환자의 피부상에서 가압할 수 있도록, 롤러부에 결합되는 손잡이부, 및 손잡이부에 결합되며, 롤러부에 전기가 도통되도록 전기발생 장치로부터의 연결단자와 접속되는 전기 입력부를 포함한다. 본 발명에 따르면, 피부층에서의 이온 자극 및 소정 주파수의 전기적인 진동 자극을 가함으로써, 피부층에서의 용액, 크림, 젤, 연고제 등의 흡수율을 획기적으로 높여 피부조직의 효과적인 재생이 가능하게 된다.

【대표도】

도 1

【색인어】

피부, 전기, 롤러, 마사지

제출 일자 : 2008-08-06

# 【발명의 설명】

## 【발명의 명칭】

전기 피부 미용기 및 전기 피부 미용 시스템{Electric Skin Treatment Device and Electric Skin Treatment System}

## 【발명의 상세한 설명】

### 【기술분야】

<1> 본 발명은 전기 피부 미용기 및 전기 피부 미용 시스템에 관한 것으로, 더욱 상세하게는 피부조직의 효과적인 재생을 위한 전기 피부 미용기 및 전기 피부 미용 시스템에 관한 것이다.

### 【배경기술】

<2> 피부조직의 노화, 흉터, 여드름 자국 등을 개선하기 위한 방법으로서, 종래에는 단순히 피부재생을 위한 용액, 크림, 젤, 연고제 등의 의약품을 단순히 피부에 도포하는 방식에 의한 치료만이 이루어졌다. 그러나, 피부에 도포된 용액, 크림, 젤, 연고제 등의 양에서 피부의 진피층으로 흡수되어 치료에 유효하게 작용하는 용액, 크림, 젤, 연고제 등의 양은 상대적으로 그 비율이 매우 작으며, 그 결과 효과적인 피부조직의 개선을 위한 치료가 이루어지지 않는다는 문제점이 있었다. 따라서, 피부조직의 효과적인 재생을 위해 피부층에서의 용액, 크림, 젤, 연고제 등의 흡수율을 획기적으로 높일 수 있는 방법이 필요하게 되었다.

### 【발명의 내용】

【해결하고자 하는 과제】

<3> 따라서, 본 발명의 목적은, 피부조직의 효과적인 재생을 위한 전기 피부 미용기 및 전기 피부 미용 시스템을 제공함에 있다.

【과제 해결 수단】

<4> 상기 목적을 달성하기 위한 본 발명에 따른 전기 피부 미용기는, 환자의 피부에 접촉되어 회전되는 롤러부; 상기 롤러부를 환자의 피부상에서 가압할 수 있도록, 상기 롤러부에 결합되는 손잡이부; 및 상기 손잡이부에 결합되며, 상기 롤러부에 전기가 도통되도록 전기발생 장치로부터의 연결단자와 접속되는 전기 입력부를 포함한다.

<5> 한편, 본 발명에 따른 전기 피부 미용 시스템은 환자의 피부에 접촉되어 회전되는 롤러부, 상기 롤러부를 환자의 피부상에서 가압할 수 있도록, 상기 롤러부에 결합되는 손잡이부, 및 상기 손잡이부에 결합되며, 상기 롤러부에 전기가 도통되도록 전기발생 장치로부터의 연결단자와 접속되는 전기 입력부를 구비하는 전기 피부 미용기; 및 상기 전기 피부 미용기의 상기 전기 입력부와 접속되는 연결단자를 통해 상기 전기 피부 미용기의 상기 롤러부에 전기가 도통되도록 하는 전기발생 장치를 포함한다.

<6> 한편, 본 발명에 따른 전기 피부 미용기는, 환자의 피부에 접촉되어 회전되는 롤러부; 상기 롤러부를 환자의 피부상에서 가압할 수 있도록, 상기 롤러부에 결합되는 손잡이부; 및 상기 롤러부에 전기가 도통되도록 상기 롤러부에 전압을 공급

하는 전원 공급부를 포함한다.

<7> 바람직하게는, 상기 환자가 손으로 잡을 수 있도록 상기 손잡이부의 외부에 결합되며, 상기 롤러부에 공급된 전압과 반대 극성의 전압을 상기 전원 공급부로부터 공급받는 접지부를 더 포함한다.

<8> 한편, 본 발명에 따른 전기 피부 미용기는, 일면에 복수개의 금속성 침체가 삽입된 평판부; 상기 평판부의 중심축 상에서 상기 평판부에 결합되는 손잡이부; 및 상기 금속성 침체에 전기가 도통되도록 상기 금속성 침체에 전압을 공급하는 전원 공급부를 포함한다.

<9> 바람직하게는, 상기 손잡이부의 외부에 결합되며, 상기 금속성 침체에 공급된 전압과 반대 극성의 전압을 상기 전원 공급부로부터 공급받는 접지부를 더 포함한다.

<10> 또한, 상기 복수개의 금속성 침체의 끝에는 상기 전원 공급부에 의해 이온, 라디오파, 초음파, 고주파, 중주파, 및 저주파 중 어느 하나가 발생하는 것을 특징으로 한다.

【효과】

<11> 이상 설명한 바와 같이, 본 발명에 따르면, 피부층에서의 이온 자극 및 소정 주파수의 전기적인 진동 자극을 가함으로써, 피부층에서의 용액, 크림, 젤, 연고제 등의 흡수율을 획기적으로 높여 피부조직의 효과적인 재생이 가능하게 된다.

【발명의 실시를 위한 구체적인 내용】

<12> 이하에서는 도면을 참조하여 본 발명을 보다 상세하게 설명한다. 도면들 중 동일한 구성요소들은 가능한 한 어느 곳에서든지 동일한 부호들로 나타내고 있음에 유의해야 한다. 또한 본 발명의 요지를 불필요하게 흐릴 수 있는 공지 기능 및 구성에 대한 상세한 설명은 생략한다.

<13> 도 1은 본 발명의 일실시예에 따른 전기 피부 미용 시스템을 이용한 시술 장면을 나타내는 도면이다. 도 1을 참조하면, 본 발명에 따른 전기 피부 미용 시스템은 전기 피부 미용기(100), 전기발생 장치(200), 및 연결단자(300a,300b)를 포함한다.

<14> 여기서, 전기 피부 미용기(100)는 연결단자(300a)를 통해서 공급받은 전기발생 장치(200)에서 생성된 전기를 이용하여 환자의 치료부위에 전기자극을 가하며, 전기발생 장치(200)는 연결단자(300a)를 통해서 전기 피부 미용기(100)에 전기를 공급하고, 연결단자(300a,300b)는 전기발생 장치(200)의 (+),(-)극에 각각 연결되어 있으며, 전기발생 장치(200)의 (-)극에 연결된 연결단자(300a)는 전기 피부 미용기(100)에 접속되어, 전기 피부 미용기(100)에 전기발생 장치(200)로부터의 전기가 도통되도록 하고, 전기발생 장치(200)의 (+)극에 연결된 연결단자(300b)는 환자의 신체에 부착된다.

<15> 즉, 시술자는 전기발생 장치(200)의 (-)극에 연결된 연결단자(300a)를 전기 피부 미용기(100)에 접속하고, 전기발생 장치(200)의 (+)극에 연결된 연결단자

(300b)를 환자의 신체에 부착시킴으로써, 전기 피부 미용기(100)를 통하여 시술을 하는 동안에 환자의 치료부위에 전기자극이 가해지도록 한다.

<16> 이러한 과정 중에 시술자는 환자의 치료부위에 비타민C 원액 또는 콜라겐 등을 반복적으로 도포함으로써, 피부 조직의 재생이 효율적으로 이루어지게 한다. 한편, 본 발명을 실시함에 있어서, 전기발생 장치(200)의 (+)극에 연결된 연결단자(300a)를 전기 피부 미용기(100)에 접속하고, 전기발생 장치(200)의 (-)극에 연결된 연결단자(300b)를 환자의 신체에 부착할 수도 있을 것이다.

<17> 본 발명을 실시함에 있어서, 전기발생 장치(200)는 교류전류를 발생시킬 수도 있을 것이며, 주파수에 따라 전기 피부 미용기(100) 상의 금속성 침체의 끝에는 라디오파, 초음파, 고주파, 중주파, 및 저주파 등이 발생할 수 있을 것이다. 한편, 전기발생 장치(200)는 (+)전류와 (-)전류가 일정 주기로 교번되는 펄스 전류를 발생시킬 수도 있을 것이다.

<18> 도 2는 본 발명의 일실시예에 따른 전기 피부 미용기를 도시한 도면이다. 도 2를 참조하면, 본 발명의 일실시예에 따른 전기 피부 미용기(100)는 전기 입력부(110), 손잡이부(130), 및 롤러부(450)를 포함한다.

<19> 여기서, 전기 입력부(110)에는 전기발생 장치(200)로부터의 연결단자(300a)가 삽입되며, 전기 피부 미용기(100)를 이용한 시술에 필요한 전기가 전기발생 장치(200)로부터 연결단자(300a)를 통해 전기 입력부(110)로 입력된다.

<20> 한편, 손잡이부(130)는 시술자가 본 발명에 따른 전기 피부 미용기(100)로

환자에게 시술을 하는 경우에 손으로 잡는 부분이며, 롤러부(450)는 환자의 시술부위에 직접 가압을 하는 부분으로서, 환자의 피부에 접촉된 상태에서 회전될 수 있도록 제작된다.

<21> 또한, 롤러부(450)는 금속 재질로 제작되어, 전기 입력부(110)를 통해 입력된 전기가 롤러부(450)를 통해 환자의 피부에 전달된다.

<22> 즉, 시술자는 환자의 시술부위 상에서 전기 피부 미용기(100)의 손잡이부(130)를 잡고 적당한 압력을 가하여 롤러부(450)를 굴림으로써, 환자의 시술부위에 이온 자극 및 전기 자극을 가할 수 있게 된다.

<23> 도 3은 본 발명의 다른 실시예에 따른 전기 피부 미용기의 구조를 나타낸 도면이다. 도 3을 참조하면, 본 발명의 다른 실시예에 따른 전기 피부 미용기(100)는 손잡이부(130), 롤러부(450), 전원 공급부(170), 스위칭부(175), 및 접지부(190)를 포함한다.

<24> 손잡이부(130), 및 롤러부(450)는 도 2에서의 본 발명의 일실시예에 따른 전기 피부 미용기(100)에서의 손잡이부(130), 및 롤러부(450)와 기능 및 작용이 동일하다.

<25> 도 2에서의 본 발명의 일실시예에 따른 전기 피부 미용기(100)는 전기 입력부(110)가 구비되어 외부의 전기발생 장치(200)로부터의 전기가 입력되었으나, 도 3에서의 본 발명의 다른 실시예에 따른 전기 피부 미용기(100)는 휴대용으로 제작된 것으로서, 내부에 자체 전원 공급부(170)를 구비하고 있다.

<26> 즉, 전원 공급부(170)에 연결된 스위칭부(175)를 'on'으로 하는 경우에, 전원 공급부(170)는 롤러부(450)에 전압을 공급하여 롤러부(450)에는 전기가 흐르게 된다.

<27> 한편, 도 3에서의 전기 피부 미용기(100)의 손잡이부(130)의 외부에는 금속 재질의 접지부(190)가 결합되어 있으며, 접지부(190)는 롤러부(450)에 공급된 전압과 반대 극성의 전압을 전원 공급부(170)로부터 공급받는다.

<28> 그에 따라, 도 3에서의 전기 피부 미용기(100)를 이용하여 환자가 직접 시술하는 경우에 (+)전압이 공급되는 롤러부(450)는 시술부위 피부에 접촉한 상태에서 (-)전압이 공급되는 접지부(190)를 손으로 파지함으로써 치료부위에 전기자극이 가해지게 된다.

<29> 즉, 도 3에서의 전기 피부 미용기(100)에 의하면, 환자는 전기 피부 미용기(100)를 휴대하고 다니면서, 스위칭부(175)를 'on'으로 한 뒤, 손잡이부(130)에 결합된 접지부(190)를 손으로 파지한 상태에서 전기가 흐르는 롤러부(450)를 자신의 얼굴 등의 피부에 직접 문지르는 동작을 통해 직접 시술을 할 수 있게 된다.

<30> 도 4는 본 발명의 또 다른 실시예에 따른 전기 피부 미용기의 구조를 나타낸 도면이다. 도 4를 참조하면, 본 발명의 또 다른 실시예에 따른 전기 피부 미용기(100)는 도 3에서의 롤러부(450) 대신에 평판부(150)를 구비한다.

<31> 도 4에서의 본 발명의 또 다른 실시예에 따른 전기 피부 미용기는 도 3에서의 전기 피부 미용기(100)에서와 같이 휴대용으로 제작된 것으로서, 내부에 자체

전원 공급부(170)를 구비하고 있다.

<32> 한편, 도 4에서의 평판부(150)는 환자의 시술부위에 직접 가압을 하는 부분으로서, 평판부(150)의 하측면에는 다수의 극미세 침체(micro needle:151)가 구비되어 있다.

<33> 여기서, 극미세 침체(151)는 평판부(150)에 형성된 다수의 홀에 삽입되어 고정되어 있으며, 평판부(150)를 기준으로 일정한 길이(A)만큼 돌출되어 있다. 극미세 침체(151)의 돌출길이(A)는 0.8㎜ 또는 2.1㎜ 또는 0.24㎜인 것이 바람직하며, 극미세 침체(151)의 지름은 0.3㎜로 함이 바람직할 것이나, 본 발명을 실시함에 있어서, 극미체 침체(151)의 돌출길이(A) 및 극미세 침체(151)의 지름은 시술부위 및 시술용도에 따라 다양한 변경 및 조합이 가능할 것이다.

<34> 또한, 전원 공급부(170)로부터 발생된 전기는 손잡이부(130)의 내부에 구비되어 있는 전기 전달체를 통하여 극미세 침체(151)에 전달되며, 극미체 침체(151)는 시술자에 의해 피부 진피층에 삽입된 상태에서 피부조직에 이온 자극 및 소정 주파수의 전기 자극을 가하게 된다.

<35> 한편, 본 발명에 따른 전기 침술기의 손잡이부(130)의 내부에는 시술의 용이성을 확보하기 위한 탄성절편(133)이 적어도 하나 이상 형성되어 있는 것이 바람직하다. 손잡이부(130)의 내부에 삽입된 탄성절편(133)에는 탄성특성이 우수한 고무절편이 사용될 수도 있고, 기타 판형 스프링 등이 사용될 수도 있을 것이다.

<36> 손잡이부(130)의 내부에 삽입된 탄성절편(133)은 극미세 침체(151)가 시술부

위의 진피층으로 부드럽게 삽입되어 이온 자극 및 소정 주파수의 진동 자극을 가하도록 하는 기능을 하게 된다.

<37> 전원 공급부(170)에 구비된 스위칭부(175)를 'on'으로 하는 경우에, 전원 공급부(170)는 극미세 침체(151)에 전압을 공급하며, 손잡이부(130)의 외부에 결합된 금속성의 접지부(190)에는 극미세 침체(151)에 공급된 전압과 반대 극성의 전압이 공급된다.

<38> 즉, 환자는 도 4에서의 전기 피부 미용기(100)를 직접 시술하는 경우에 (+)전압이 공급되는 극미세 침체(151)를 시술부위 피부 진피층에 삽입한 상태에서 (-)전압이 공급되는 접지부(190)를 손으로 파지함으로써 치료부위에 전기자극이 가해지도록 한다.

<39> 도 5는 도 4에서의 전기 피부 미용기의 저면도로서 평판부의 하측면을 도시하는 도면이다. 도 5를 참조하면, 본 발명에 따른 전기 피부 미용기(100)의 평판부(150)는 직사각형의 형상을 하고 있으며, 그 내부에는 다수의 홀(hole)(159)이 형성되어 있다. 본 발명을 실시함에 있어서, 평판부(150)의 형상은 직사각형, 마름모형, 원형, 타원형 등의 시술자의 편리에 따른 다양한 형상(예를 들어, 환자의 시술 부위의 형상과 유사한 형상 등)으로 이루어질 수 있을 것이다.

<40> 평판부(150)에 형성된 홀(159)은 가로방향으로 14개의 행을 따라 동일한 간격으로 위치하고 있으며, 세로방향으로는 10개의 행을 따라 동일한 간격으로 위치하고 있다. 그 결과, 평판부(150)에는 등간격의 격자형상으로 총 140개의 홀(159)이 형성된다. 이와 같이 평판부(150)에 형성된 다수의 홀(159)에는 환자의 시술부

위에 미세상처를 내기 위한 극미세 침체(151)가 삽입되어 고정된다.

<41> 다만, 본 발명을 실시함에 있어서, 평판부(150)에 형성된 홀(159)의 개수 및 간격은 시술목적에 따라 적절하게 조정될 수 있을 것이다.

<42> 도 6은 도 4에서의 전기 피부 미용기의 평판부의 분해 사시도이다. 도 4 내지 도 6을 참조하면 본 발명에 따른 전기 피부 미용기(100)의 평판부(150)는 복수개의 극미세 침체(151), 하면부(153), 전기 전도부(155), 및 상면부(157)를 포함한다.

<43> 복수개의 극미세 침체(151)는 하면부(153)에 형성된 복수개의 홀(159)을 통해 하면부(153)와 결합되어 있으며, 하면부(153)는 전기 전도부(155)와 결합되어 있다. 여기서, 복수개의 극미세 침체(151)는 하면부(153)를 관통하여, 전기 전도부(155)에 전기적으로 결합되어 있다.

<44> 전기 피부 미용기(100)의 전원 공급부(170)에서 발생된 전기는 손잡이부(130) 내의 도전성의 전기 전달체를 통하여 전기 전도부(155)로 전해지며, 최종적으로는 전기 전도부(155)에 전기적으로 결합되어 있는 복수개의 극미세 침체(151)에 전달된다. 그 결과 극미체 침체(151)는 시술자에 의해 피부 진피층에 삽입된 상태에서 피부조직에 이온 자극 및 소정 주파수의 전기 자극을 가하게 된다.

<45> 한편, 전기 전도부(155)는 상면부(157)와 결합되어 있으며, 상면부(157)는 전기 피부 미용기(100)의 손잡이부(130)와 일체로서 연결되어 있거나, 나사방식에 의해서 결합되어 있을 수도 있을 것이다.

<46> 도 4에서의 본 발명의 또 다른 실시예에 따른 전기 피부 미용기(100)의 시술 과정을 설명하면, 환자는 전기 피부 미용기(100)의 손잡이부(130)를 잡고서, 다수의 극미세 침체(151)를 환자의 시술부위에 대고 압력을 가한다. 이러한 과정의 반복을 통해 환자의 시술부위에는 무수히 많은 미세상처(즉, 마이크로 홀)가 생기게 되고, 이러한 마이크로 홀 내의 극미세 침체(151) 끝에서는 소정의 주파수의 전류가 주위의 피부조직으로 전도되며, 이에 따라 극미세 침체(151) 주변의 피부조직의 이온을 흥분시키거나 전기적 진동 자극에 의한 열을 일으키게 된다.

<47> 이와 같은 피부 진피층에서의 이온 자극 및 소정 주파수의 전기적인 진동 자극을 통해서, 피부조직의 효과적인 재생을 위해 피부층에서의 용액, 크림, 젤, 연고제 등의 흡수율을 획기적으로 높여 환자의 피부 조직은 빠른 속도로 새로운 조직을 형성하게 된다.

<48> 이상에서는 본 발명의 바람직한 실시예 및 응용예에 대하여 도시하고 설명하였지만, 본 발명은 상술한 특정의 실시예 및 응용예에 한정되지 아니하며, 청구범위에서 청구하는 본 발명의 요지를 벗어남이 없이 당해 발명이 속하는 기술분야에서 통상의 지식을 가진자에 의해 다양한 변형실시가 가능한 것은 물론이고, 이러한 변형실시들은 본 발명의 기술적 사상이나 전망으로부터 개별적으로 이해되어져서는 안될 것이다.

제출 일자 : 2008-08-06

【특허청구범위】

【청구항 1】

환자의 피부에 접촉되어 회전되는 롤러부;

상기 롤러부를 환자의 피부상에서 가압할 수 있도록, 상기 롤러부에 결합되는 손잡이부; 및

상기 롤러부에 전기가 도통되도록 상기 롤러부에 전압을 공급하는 전원 공급부

를 포함하는 전기 피부 미용기.

【청구항 2】

제1항에 있어서,

상기 환자가 손으로 잡을 수 있도록 상기 손잡이부의 외부에 결합되며, 상기 롤러부에 공급된 전압과 반대 극성의 전압을 상기 전원 공급부로부터 공급받는 접지부를 더 포함하는 전기 피부 미용기.

【청구항 3】

일면에 복수개의 금속성 침체가 삽입된 평판부;

상기 평판부의 중심축 상에서 상기 평판부에 결합되는 손잡이부; 및

상기 금속성 침체에 전기가 도통되도록 상기 금속성 침체에 전압을 공급하는 전원 공급부

를 포함하는 전기 피부 미용기.

【청구항 4】

제3항에 있어서,

상기 손잡이부의 외부에 결합되며, 상기 금속성 침체에 공급된 전압과 반대 극성의 전압을 상기 전원 공급부로부터 공급받는 접지부를 더 포함하는 전기 피부 미용기.

【청구항 5】

제1항 또는 제3항에 있어서,

상기 복수개의 금속성 침체의 끝에는 상기 전원 공급부에 의해 이온, 라디오파, 초음파, 고주파, 중주파, 및 저주파 중 어느 하나가 발생하는 것인 전기 피부 미용기.

【도면의 간단한 설명】

<49> 도 1은 본 발명의 일실시예에 따른 전기 피부 미용 시스템을 이용한 시술 장면을 나타내는 도면,

<50> 도 2는 본 발명의 일실시예에 따른 전기 피부 미용기를 도시한 도면,

<51> 도 3은 본 발명의 다른 실시예에 따른 전기 피부 미용기의 구조를 나타낸 도면,

<52> 도 4는 본 발명의 또 다른 실시예에 따른 전기 피부 미용기의 구조를 나타낸

도면,

<53> 도 5는 도 4에서의 전기 피부 미용기의 저면도로서 평판부의 하측면을 도시하는 도면, 및

<54> 도 6은 도 4에서의 전기 피부 미용기의 평판부의 분해 사시도이다.

【도면】

【도 1】

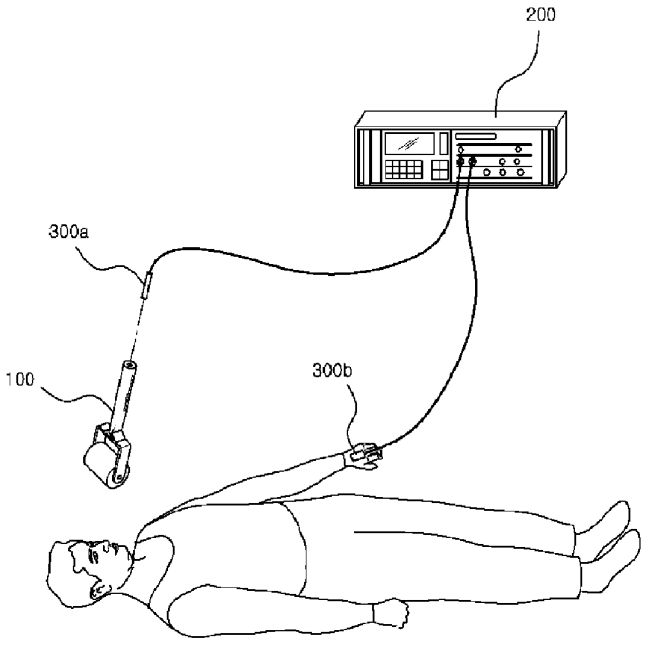

【도 2】

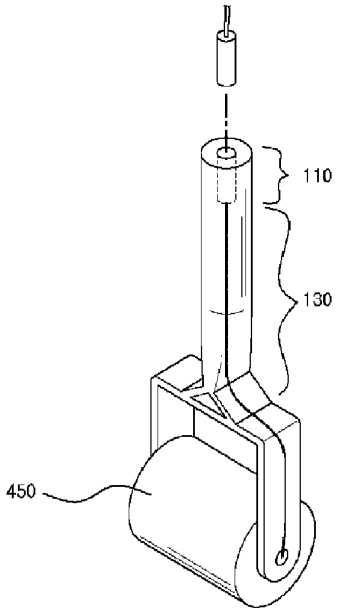

【도 3】

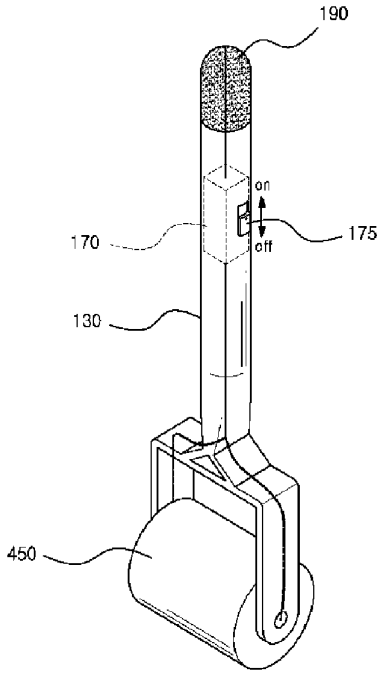

【도 4】

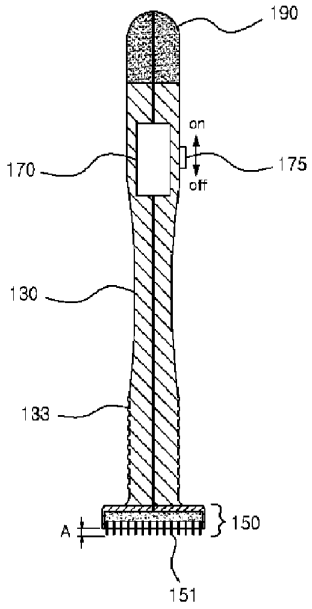


【도 5】

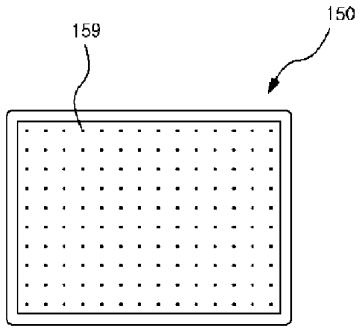

【도 6】

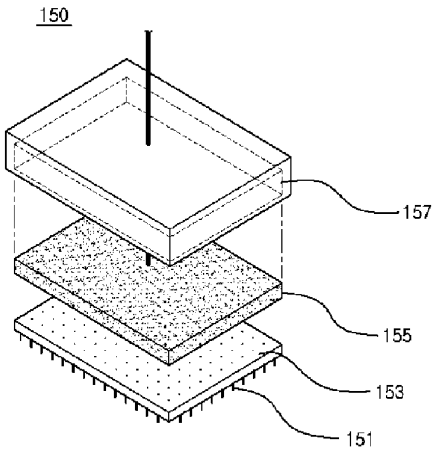

PTO/SB/06 (09-11)
Approved for use through 1/31/2014. OMB 0651-0032
U.S. Patent and Trademark Office; U.S. DEPARTMENT OF COMMERCE
Under the Paperwork Reduction Act of 1995, no persons are required to respond to a collection of information unless it displays a valid OMB control number.

# PATENT APPLICATION FEE DETERMINATION RECORD

Substitute for Form PTO-875

| Application or Docket Number | Filing Date | ☐ To be Mailed |
|---|---|---|
| 15/096,686 | 04/12/2016 | |

**ENTITY**: ☐ LARGE ☒ SMALL ☐ MICRO

## APPLICATION AS FILED – PART I

| FOR | (Column 1) NUMBER FILED | (Column 2) NUMBER EXTRA | RATE ($) | FEE ($) |
|---|---|---|---|---|
| ☐ BASIC FEE (37 CFR 1.16(a), (b), or (c)) | N/A | N/A | N/A | |
| ☐ SEARCH FEE (37 CFR 1.16(k), (i), or (m)) | N/A | N/A | N/A | |
| ☐ EXAMINATION FEE (37 CFR 1.16(o), (p), or (q)) | N/A | N/A | N/A | |
| TOTAL CLAIMS (37 CFR 1.16(i)) | minus 20 = | * | X $ = | |
| INDEPENDENT CLAIMS (37 CFR 1.16(h)) | minus 3 = | * | X $ = | |
| ☐ APPLICATION SIZE FEE (37 CFR 1.16(s)) | If the specification and drawings exceed 100 sheets of paper, the application size fee due is $310 ($155 for small entity) for each additional 50 sheets or fraction thereof. See 35 U.S.C. 41(a)(1)(G) and 37 CFR 1.16(s). | | | |
| ☐ MULTIPLE DEPENDENT CLAIM PRESENT (37 CFR 1.16(j)) | | | | |
| * If the difference in column 1 is less than zero, enter "0" in column 2. | | | TOTAL | |

## APPLICATION AS AMENDED – PART II

AMENDMENT 04/12/2016

| | (Column 1) CLAIMS REMAINING AFTER AMENDMENT | | (Column 2) HIGHEST NUMBER PREVIOUSLY PAID FOR | (Column 3) PRESENT EXTRA | RATE ($) | ADDITIONAL FEE ($) |
|---|---|---|---|---|---|---|
| Total (37 CFR 1.16(i)) | * 20 | Minus | ** 20 | = 0 | X $40 = | 0 |
| Independent (37 CFR 1.16(h)) | * 2 | Minus | ***3 | = 0 | X $210 = | 0 |
| ☐ Application Size Fee (37 CFR 1.16(s)) | | | | | | |
| ☐ FIRST PRESENTATION OF MULTIPLE DEPENDENT CLAIM (37 CFR 1.16(j)) | | | | | | |
| | | | | | TOTAL ADD'L FEE | 0 |

AMENDMENT

| | (Column 1) CLAIMS REMAINING AFTER AMENDMENT | | (Column 2) HIGHEST NUMBER PREVIOUSLY PAID FOR | (Column 3) PRESENT EXTRA | RATE ($) | ADDITIONAL FEE ($) |
|---|---|---|---|---|---|---|
| Total (37 CFR 1.16(i)) | * | Minus | ** | = | X $ = | |
| Independent (37 CFR 1.16(h)) | * | Minus | *** | = | X $ = | |
| ☐ Application Size Fee (37 CFR 1.16(s)) | | | | | | |
| ☐ FIRST PRESENTATION OF MULTIPLE DEPENDENT CLAIM (37 CFR 1.16(j)) | | | | | | |
| | | | | | TOTAL ADD'L FEE | |

* If the entry in column 1 is less than the entry in column 2, write "0" in column 3.

** If the "Highest Number Previously Paid For" IN THIS SPACE is less than 20, enter "20".

*** If the "Highest Number Previously Paid For" IN THIS SPACE is less than 3, enter "3".

The "Highest Number Previously Paid For" (Total or Independent) is the highest number found in the appropriate box in column 1.

LIE
VINCENT BUTLER

This collection of information is required by 37 CFR 1.16. The information is required to obtain or retain a benefit by the public which is to file (and by the USPTO to process) an application. Confidentiality is governed by 35 U.S.C. 122 and 37 CFR 1.14. This collection is estimated to take 12 minutes to complete, including gathering, preparing, and submitting the completed application form to the USPTO. Time will vary depending upon the individual case. Any comments on the amount of time you require to complete this form and/or suggestions for reducing this burden, should be sent to the Chief Information Officer, U.S. Patent and Trademark Office, U.S. Department of Commerce, P.O. Box 1450, Alexandria, VA 22313-1450. DO NOT SEND FEES OR COMPLETED FORMS TO THIS ADDRESS. **SEND TO: Commissioner for Patents, P.O. Box 1450, Alexandria, VA 22313-1450.**

*If you need assistance in completing the form, call 1-800-PTO-9199 and select option 2.*

UNITED STATES PATENT AND TRADEMARK OFFICE

UNITED STATES DEPARTMENT OF COMMERCE
United States Patent and Trademark Office
Address: COMMISSIONER FOR PATENTS
P.O. Box 1450
Alexandria, Virginia 22313-1450
www.uspto.gov

| APPLICATION NO. | FILING DATE | FIRST NAMED INVENTOR | ATTORNEY DOCKET NO. | CONFIRMATION NO. |
|---|---|---|---|---|
| 15/096,686 | 04/12/2016 | Jongju Na | NA001KR_US2 | 2620 |

26338 7590 11/30/2016

MERLE W. RICHMAN, III
P.O. BOX 3333
LA JOLLA, CA 92038

| EXAMINER |
|---|
| COMSTOCK, DAVID C |

| ART UNIT | PAPER NUMBER |
|---|---|
| 3733 | |

| MAIL DATE | DELIVERY MODE |
|---|---|
| 11/30/2016 | PAPER |

**Please find below and/or attached an Office communication concerning this application or proceeding.**

The time period for reply, if any, is set in the attached communication.

| Office Action Summary | Application No. 15/096,686 | Applicant(s) NA, JONGJU | |
|---|---|---|---|
| | Examiner DAVID C. COMSTOCK | Art Unit 3733 | AIA (First Inventor to File) Status Yes |

*-- The MAILING DATE of this communication appears on the cover sheet with the correspondence address --*

**Period for Reply**

A SHORTENED STATUTORY PERIOD FOR REPLY IS SET TO EXPIRE *3* MONTHS FROM THE MAILING DATE OF THIS COMMUNICATION.

- Extensions of time may be available under the provisions of 37 CFR 1.136(a). In no event, however, may a reply be timely filed after SIX (6) MONTHS from the mailing date of this communication.
- If NO period for reply is specified above, the maximum statutory period will apply and will expire SIX (6) MONTHS from the mailing date of this communication.
- Failure to reply within the set or extended period for reply will, by statute, cause the application to become ABANDONED (35 U.S.C. § 133). Any reply received by the Office later than three months after the mailing date of this communication, even if timely filed, may reduce any earned patent term adjustment. See 37 CFR 1.704(b).

**Status**

1)☒ Responsive to communication(s) filed on *12 April 2016*.

☐ A declaration(s)/affidavit(s) under **37 CFR 1.130(b)** was/were filed on _____.

2a)☐ This action is **FINAL**. 2b)☒ This action is non-final.

3)☐ An election was made by the applicant in response to a restriction requirement set forth during the interview on _____; the restriction requirement and election have been incorporated into this action.

4)☐ Since this application is in condition for allowance except for formal matters, prosecution as to the merits is closed in accordance with the practice under *Ex parte Quayle*, 1935 C.D. 11, 453 O.G. 213.

**Disposition of Claims***

5)☒ Claim(s) *21-40* is/are pending in the application.

5a) Of the above claim(s) _____ is/are withdrawn from consideration.

6)☐ Claim(s) _____ is/are allowed.

7)☒ Claim(s) *21-40* is/are rejected.

8)☐ Claim(s) _____ is/are objected to.

9)☐ Claim(s) _____ are subject to restriction and/or election requirement.

* If any claims have been determined allowable, you may be eligible to benefit from the **Patent Prosecution Highway** program at a participating intellectual property office for the corresponding application. For more information, please see http://www.uspto.gov/patents/init_events/pph/index.jsp or send an inquiry to PPHfeedback@uspto.gov.

**Application Papers**

10)☐ The specification is objected to by the Examiner.

11)☒ The drawing(s) filed on *12 April 2016* is/are: a)☒ accepted or b)☐ objected to by the Examiner.

Applicant may not request that any objection to the drawing(s) be held in abeyance. See 37 CFR 1.85(a).

Replacement drawing sheet(s) including the correction is required if the drawing(s) is objected to. See 37 CFR 1.121(d).

**Priority under 35 U.S.C. § 119**

12)☒ Acknowledgment is made of a claim for foreign priority under 35 U.S.C. § 119(a)-(d) or (f).

**Certified copies:**

a)☒ All b)☐ Some** c)☐ None of the:

1.☐ Certified copies of the priority documents have been received.

2.☒ Certified copies of the priority documents have been received in Application No. 13825083.

3.☐ Copies of the certified copies of the priority documents have been received in this National Stage application from the International Bureau (PCT Rule 17.2(a)).

** See the attached detailed Office action for a list of the certified copies not received.

**Attachment(s)**

1) ☒ Notice of References Cited (PTO-892)

2) ☐ Information Disclosure Statement(s) (PTO/SB/08a and/or PTO/SB/08b) Paper No(s)/Mail Date _____.

3) ☐ Interview Summary (PTO-413) Paper No(s)/Mail Date. _____ .

4) ☐ Other: _____.

## DETAILED ACTION

### *Notice of Pre-AIA or AIA Status*

The present application, filed on or after March 16, 2013, is being examined under the first inventor to file provisions of the AIA.

### *Double Patenting*

The nonstatutory double patenting rejection is based on a judicially created doctrine grounded in public policy (a policy reflected in the statute) so as to prevent the unjustified or improper timewise extension of the "right to exclude" granted by a patent and to prevent possible harassment by multiple assignees. A nonstatutory double patenting rejection is appropriate where the conflicting claims are not identical, but at least one examined application claim is not patentably distinct from the reference claim(s) because the examined application claim is either anticipated by, or would have been obvious over, the reference claim(s). See, e.g., *In re Berg*, 140 F.3d 1428, 46 USPQ2d 1226 (Fed. Cir. 1998); *In re Goodman*, 11 F.3d 1046, 29 USPQ2d 2010 (Fed. Cir. 1993); *In re Longi*, 759 F.2d 887, 225 USPQ 645 (Fed. Cir. 1985); *In re Van Ornum*, 686 F.2d 937, 214 USPQ 761 (CCPA 1982); *In re Vogel*, 422 F.2d 438, 164 USPQ 619 (CCPA 1970); *In re Thorington*, 418 F.2d 528, 163 USPQ 644 (CCPA 1969).

A timely filed terminal disclaimer in compliance with 37 CFR 1.321(c) or 1.321(d) may be used to overcome an actual or provisional rejection based on nonstatutory double patenting provided the reference application or patent either is shown to be commonly owned with the examined application, or claims an invention made as a result of activities undertaken within the scope of a joint research agreement. See MPEP § 717.02 for applications subject to examination under the first inventor to file provisions of the AIA as explained in MPEP § 2159. See MPEP §§ 706.02(l)(1) - 706.02(l)(3) for applications not subject to examination under the first inventor to file provisions of the AIA. A terminal disclaimer must be signed in compliance with 37 CFR 1.321(b).

The USPTO Internet website contains terminal disclaimer forms which may be used. Please visit www.uspto.gov/patent/patents-forms. The filing date of the application in which the form is filed determines what form (e.g., PTO/SB/25, PTO/SB/26, PTO/AIA/25, or PTO/AIA/26) should be used. A web-based eTerminal Disclaimer may be filled out completely online using web-screens. An eTerminal

Disclaimer that meets all requirements is auto-processed and approved immediately upon submission. For more information about eTerminal Disclaimers, refer to www.uspto.gov/patents/process/file/efs/guidance/eTD-info-I.jsp.

Claims 21-40 are rejected on the ground of nonstatutory double patenting as being unpatentable over claims 1-20 of U.S. Patent No. 9,320,536. Although the claims at issue are not identical, they are not patentably distinct from each other because the differences amount to minor changes in the phraseology and arrangement of claim limitations. Both the noted issued patent and the present claims are directed to substantially the same invention of a dermatological treatment system utilizing deployable needles, an energized motor, electrical signals, a signal generator, and method of using the same to deliver energy to the needles and dermatological tissue.

Any inquiry concerning this communication or earlier communications from the examiner should be directed to David Comstock whose telephone number is (571) 272-4710. The examiner can normally be reached Monday-Friday, 9 a.m. - 6 p.m.

If attempts to reach the examiner by telephone are unsuccessful, ***please contact*** **the examiner's supervisor, SPE, *at* (571) 272-4760**. The fax phone number for the organization where this application or proceeding is assigned is 571-273-8300.

Information regarding the status of an application may be obtained from the Patent Application Information Retrieval (PAIR) system. Status information for published applications may be obtained from either Private PAIR or Public PAIR. Status information for unpublished applications is available through Private PAIR only. For more information about the PAIR system, see http://pair-direct.uspto.gov. Should you have questions on access to the Private PAIR system, contact the Electronic Business Center (EBC) at 866-217-9197 (toll-free). If you would like assistance from a USPTO Customer Service Representative or access to the automated information system, call 800-786-9199 (IN USA OR CANADA) or 571-272-1000.

/DAVID C COMSTOCK/
Examiner, Art Unit 3733
/PEDRO PHILOGENE/

Primary Examiner, Art Unit 3733

| Notice of References Cited | Application/Control No. 15/096,686 | Applicant(s)/Patent Under Reexamination NA, JONGJU | |
|---|---|---|---|
| | Examiner DAVID C. COMSTOCK | Art Unit 3733 | Page 1 of 1 |

**U.S. PATENT DOCUMENTS**

| * | | Document Number Country Code-Number-Kind Code | Date MM-YYYY | Name | CPC Classification | US Classification |
|---|---|---|---|---|---|---|
| * | A | US-9,320,536 B2 | 04-2016 | Na; Jongju | A61N1/30 | 1/1 |
| | B | US- | | | | |
| | C | US- | | | | |
| | D | US- | | | | |
| | E | US- | | | | |
| | F | US- | | | | |
| | G | US- | | | | |
| | H | US- | | | | |
| | I | US- | | | | |
| | J | US- | | | | |
| | K | US- | | | | |
| | L | US- | | | | |
| | M | US- | | | | |

**FOREIGN PATENT DOCUMENTS**

| * | | Document Number Country Code-Number-Kind Code | Date MM-YYYY | Country | Name | CPC Classification |
|---|---|---|---|---|---|---|
| | N | | | | | |
| | O | | | | | |
| | P | | | | | |
| | Q | | | | | |
| | R | | | | | |
| | S | | | | | |
| | T | | | | | |

**NON-PATENT DOCUMENTS**

| * | | Include as applicable: Author, Title Date, Publisher, Edition or Volume, Pertinent Pages) |
|---|---|---|
| | U | |
| | V | |
| | W | |
| | X | |

*A copy of this reference is not being furnished with this Office action. (See MPEP § 707.05(a).)
Dates in MM-YYYY format are publication dates. Classifications may be US or foreign.

**EAST Search History**

**EAST Search History (Prior Art)**

| Ref # | Hits | Search Query | DBs | Default Operator | Plurals | Time Stamp |
|---|---|---|---|---|---|---|
| L1 | 12390 | ((600/249) or (601/2) or (604/20,21,46,117) or (606/9) or (424/1.11)).CCLS. | US-PGPUB; USPAT; USOCR | OR | OFF | 2016/11/28 14:15 |
| L2 | 2391 | A61B17/320068.cpc. | US-PGPUB; USPAT; USOCR | OR | OFF | 2016/11/28 14:15 |
| L3 | 929 | A61B1/06,20.cpc. | US-PGPUB; USPAT; USOCR | OR | OFF | 2016/11/28 14:16 |
| L4 | 1090 | A61N1/30.cpc. | US-PGPUB; USPAT; USOCR | OR | OFF | 2016/11/28 14:16 |
| L5 | 1611 | A61N5/0616.cpc. | US-PGPUB; USPAT; USOCR | OR | OFF | 2016/11/28 14:16 |
| L6 | 2987 | A61M37/00,0015.cpc. | US-PGPUB; USPAT; USOCR | OR | OFF | 2016/11/28 14:16 |
| L7 | 1262 | A61M2037/0007,0046,0061.cpc. | US-PGPUB; USPAT; USOCR | OR | OFF | 2016/11/28 14:17 |
| L8 | 769 | (needle same motor) and (dermatological or dermalogical or dermis or skin) and electric$3 and (led or "l.e.d." or "light emitting diode") | US-PGPUB; USPAT; USOCR | OR | OFF | 2016/11/28 14:18 |
| L9 | 1707 | (1 2 3 4 5 6 7 8) and @pd>"20150824" | US-PGPUB; USPAT; USOCR | OR | OFF | 2016/11/28 14:18 |
| L11 | 6 | (("NA") near3 ("Jongju")).INV. | US-PGPUB; USPAT; USOCR | OR | OFF | 2016/11/28 14:42 |

**11/28/2016 2:44:07 PM**
**C:\Users\dcomstock\Documents\EAST\Workspaces\untitled.wsp**

UNITED STATES PATENT AND TRADEMARK OFFICE

UNITED STATES DEPARTMENT OF COMMERCE
United States Patent and Trademark Office
Address: COMMISSIONER FOR PATENTS
P.O. Box 1450
Alexandria, Virginia 22313-1450
www.uspto.gov

# BIB DATA SHEET

**CONFIRMATION NO. 2620**

| SERIAL NUMBER | FILING or 371(c) DATE | CLASS | GROUP ART UNIT | ATTORNEY DOCKET NO. |
|---|---|---|---|---|
| 15/096,686 | 04/12/2016<br>RULE | 600 | 3733 | NA001KR_US2 |

**APPLICANTS**

**INVENTORS**

Jongju Na, Songpa-Gu, KOREA, REPUBLIC OF;

**** CONTINUING DATA ***************************

This application is a CON of 13/825,083 01/20/2014 PAT 9320536 *
which is a 371 of PCT/KR2012/001335 02/22/2012
which claims benefit of 61/449,080 03/03/2011
and is a CON of 13/060,274 03/30/2011 PAT 8979912 *
which is a 371 of PCT/US08/74131 08/22/2008
(*)Data provided by applicant is not consistent with PTO records.

**** FOREIGN APPLICATIONS ***************************

REPUBLIC OF KOREA 10-2008-0076993 08/06/2008

**** IF REQUIRED, FOREIGN FILING LICENSE GRANTED **** ** SMALL ENTITY **
04/27/2016

| Foreign Priority claimed | 35 USC 119(a-d) conditions met | Verified and Acknowledged | Met after Allowance | STATE OR COUNTRY | SHEETS DRAWINGS | TOTAL CLAIMS | INDEPENDENT CLAIMS |
|---|---|---|---|---|---|---|---|
| ☑ Yes ☐ No | ☑ Yes ☐ No | /DAVID C COMSTOCK/ Examiner's Signature | ☐ Initials | KOREA, REPUBLIC OF | 21 | 20 | 2 |

**ADDRESS**

MERLE W. RICHMAN, III
P.O. BOX 3333
LA JOLLA, CA 92038
UNITED STATES

**TITLE**

Method, system, and apparatus for dermatological treatment

| FILING FEE RECEIVED | | |
|---|---|---|
| 800 | FEES: Authority has been given in Paper No._____ to charge/credit DEPOSIT ACCOUNT No._____ for following: | ☐ All Fees<br>☐ 1.16 Fees (Filing)<br>☐ 1.17 Fees (Processing Ext. of time)<br>☐ 1.18 Fees (Issue)<br>☐ Other _____<br>☐ Credit |

| Search Notes | Application/Control No. | Applicant(s)/Patent Under Reexamination |
|---|---|---|
| | 15096686 | NA, JONGJU |
| | Examiner | Art Unit |
| | DAVID C COMSTOCK | 3733 |

| CPC- SEARCHED | | |
|---|---|---|
| Symbol | Date | Examiner |
| A61B17/320068 | 11/28/2016 | /DC/ |
| A61B1/06, 20 | 11/28/2016 | /DC/ |
| A61N 1/30 | 11/28/2016 | /DC/ |
| A61N5/0616 | 11/28/2016 | /DC/ |
| A61M37/00, 0015 | 11/28/2016 | /DC/ |
| A61M2037/0007, 0046, 0061 | 11/28/2016 | /DC/ |

| CPC COMBINATION SETS - SEARCHED | | |
|---|---|---|
| Symbol | Date | Examiner |
| | | |

| US CLASSIFICATION SEARCHED | | | |
|---|---|---|---|
| Class | Subclass | Date | Examiner |
| 600 | 246 | 11/28/2016 | /DC/ |
| 601 | 2 | 11/28/2016 | /DC/ |
| 604 | 20, 21, 46, 117 | 11/28/2016 | /DC/ |
| 606 | 9 | 11/28/2016 | /DC/ |
| 607 | 102, 189 | 11/28/2016 | /DC/ |
| 424 | 1.11 | 11/28/2016 | /DC/ |

| SEARCH NOTES | | |
|---|---|---|
| Search Notes | Date | Examiner |
| EAST text search--see printout | 11/28/2016 | /DC/ |
| Inventor name search--see EAST printout | 11/28/2016 | /DC/ |

| INTERFERENCE SEARCH | | | |
|---|---|---|---|
| US Class/ CPC Symbol | US Subclass / CPC Group | Date | Examiner |

| | |
|---|---|
| /DAVID C COMSTOCK/<br>Examiner.Art Unit 3733 | |

| Index of Claims | Application/Control No. | Applicant(s)/Patent Under Reexamination |
|---|---|---|
| | 15096686 | NA, JONGJU |
| | Examiner | Art Unit |
| | DAVID C COMSTOCK | 3733 |

| | | | | | | | |
|---|---|---|---|---|---|---|---|
| ✓ | Rejected | - | Cancelled | N | Non-Elected | A | Appeal |
| = | Allowed | ÷ | Restricted | I | Interference | O | Objected |

☐ Claims renumbered in the same order as presented by applicant ☐ CPA ☐ T.D. ☐ R.1.47

| CLAIM | | DATE | | | | | | | | |
|---|---|---|---|---|---|---|---|---|---|---|
| Final | Original | 11/28/2016 | | | | | | | | |
| | 1 | - | | | | | | | | |
| | 2 | - | | | | | | | | |
| | 3 | - | | | | | | | | |
| | 4 | - | | | | | | | | |
| | 5 | - | | | | | | | | |
| | 6 | - | | | | | | | | |
| | 7 | - | | | | | | | | |
| | 8 | - | | | | | | | | |
| | 9 | - | | | | | | | | |
| | 10 | - | | | | | | | | |
| | 11 | - | | | | | | | | |
| | 12 | - | | | | | | | | |
| | 13 | - | | | | | | | | |
| | 14 | - | | | | | | | | |
| | 15 | - | | | | | | | | |
| | 16 | - | | | | | | | | |
| | 17 | - | | | | | | | | |
| | 18 | - | | | | | | | | |
| | 19 | - | | | | | | | | |
| | 20 | - | | | | | | | | |
| | 21 | ✓ | | | | | | | | |
| | 22 | ✓ | | | | | | | | |
| | 23 | ✓ | | | | | | | | |
| | 24 | ✓ | | | | | | | | |
| | 25 | ✓ | | | | | | | | |
| | 26 | ✓ | | | | | | | | |
| | 27 | ✓ | | | | | | | | |
| | 28 | ✓ | | | | | | | | |
| | 29 | ✓ | | | | | | | | |
| | 30 | ✓ | | | | | | | | |
| | 31 | ✓ | | | | | | | | |
| | 32 | ✓ | | | | | | | | |
| | 33 | ✓ | | | | | | | | |
| | 34 | ✓ | | | | | | | | |
| | 35 | ✓ | | | | | | | | |
| | 36 | ✓ | | | | | | | | |

| Index of Claims | Application/Control No. | Applicant(s)/Patent Under Reexamination |
|---|---|---|
| | 15096686 | NA, JONGJU |
| | Examiner | Art Unit |
| | DAVID C COMSTOCK | 3733 |

| | | | | | | | |
|---|---|---|---|---|---|---|---|
| ✓ | Rejected | - | Cancelled | N | Non-Elected | A | Appeal |
| = | Allowed | ÷ | Restricted | I | Interference | O | Objected |

☐ Claims renumbered in the same order as presented by applicant ☐ CPA ☐ T.D. ☐ R.1.47

| CLAIM | | DATE | | | | | | | | |
|---|---|---|---|---|---|---|---|---|---|---|
| Final | Original | 11/28/2016 | | | | | | | | |
| | 37 | ✓ | | | | | | | | |
| | 38 | ✓ | | | | | | | | |
| | 39 | ✓ | | | | | | | | |
| | 40 | ✓ | | | | | | | | |

UNITED STATES PATENT AND TRADEMARK OFFICE

UNITED STATES DEPARTMENT OF COMMERCE
United States Patent and Trademark Office
Address: COMMISSIONER FOR PATENTS
P.O. Box 1450
Alexandria, Virginia 22313-1450
www.uspto.gov

| APPLICATION NUMBER | FILING OR 371(C) DATE | FIRST NAMED APPLICANT | ATTY. DOCKET NO./TITLE |
|---|---|---|---|
| 15/096,686 | 04/12/2016 | Jongju Na | NA001KR_US2 |

**CONFIRMATION NO. 2620**

26338
MERLE W. RICHMAN, III
P.O. BOX 3333
LA JOLLA, CA 92038

**PUBLICATION NOTICE**




**Title:**Method, system, and apparatus for dermatological treatment

**Publication No.**US-2016-0361229-A1
**Publication Date:**12/15/2016

## NOTICE OF PUBLICATION OF APPLICATION

The above-identified application will be electronically published as a patent application publication pursuant to 37 CFR 1.211, et seq. The patent application publication number and publication date are set forth above.

The publication may be accessed through the USPTO's publically available Searchable Databases via the Internet at www.uspto.gov. The direct link to access the publication is currently http://www.uspto.gov/patft/.

The publication process established by the Office does not provide for mailing a copy of the publication to applicant. A copy of the publication may be obtained from the Office upon payment of the appropriate fee set forth in 37 CFR 1.19(a)(1). Orders for copies of patent application publications are handled by the USPTO's Office of Public Records. The Office of Public Records can be reached by telephone at (571) 272-3150 or (800) 972-6382, by facsimile at (571) 273-3250, by mail addressed to the United States Patent and Trademark Office, Office of Public Records, Alexandria, VA 22313-1450 or via the Internet.

In addition, information on the status of the application, including the mailing date of Office actions and the dates of receipt of correspondence filed in the Office, may also be accessed via the Internet through the Patent Electronic Business Center at www.uspto.gov using the public side of the Patent Application Information and Retrieval (PAIR) system. The direct link to access this status information is currently http://pair.uspto.gov/. Prior to publication, such status information is confidential and may only be obtained by applicant using the private side of PAIR.

Further assistance in electronically accessing the publication, or about PAIR, is available by calling the Patent Electronic Business Center at 1-866-217-9197.

---

Office of Data Managment, Application Assistance Unit (571) 272-4000, or (571) 272-4200, or 1-888-786-0101

**IN THE UNITED STATES PATENT AND TRADEMARK OFFICE**

| | |
|---|---|
| Applicant(s): Na<br><br>Application No.: 15096686<br><br>Filed:<br>4/12/2016<br><br>Title: METHOD, SYSTEM, AND APPARATUS FOR DERMATOLOGICAL TREATMENT<br><br>Attorney Docket No.: NA001KR_US2 | Art Unit:<br>3733<br><br>Examiner:<br>David Comstock |

Commissioner for Patents
P.O. Box 1450
Alexandria, VA 22313-1450

RESPONSE UNDER 37 CFR 1.111

Dear Sir:

An office action was mailed on November 30, 2016 with a shortened statutory response time of 3 months. Filing of this response is thus timely and Applicant respectfully requests its entry.

Claim listing begins on page 2.

Remarks begin on page 6.

In the claims:

1. (Cancelled).
2. (Cancelled).
3. (Cancelled).
4. (Cancelled).
5. (Cancelled).
6. (Cancelled).
7. (Cancelled).
8. (Cancelled).
9. (Cancelled).
10. (Cancelled).
11. (Cancelled).
12. (Cancelled).
13. (Cancelled).
14. (Cancelled).
15. (Cancelled).
16. (Cancelled).
17. (Cancelled).
18. (Cancelled).
19. (Cancelled).
20. (Cancelled).

21. (Previously Presented) A method of treating dermatological tissue, comprising:

placing a device surface on or near dermatological tissue to be treated, the surface including a plurality of needles one of extending or extendable a desired distance from the surface; and

directing a signal generator electrically coupled to the plurality of extended needles to produce pulsed radio frequency signals across the plurality of needles to affect dermatological tissue near the plurality of needles.

22. (Previously Presented) The method of treating dermatological tissue of claim 21, including placing a device end surface on or near dermatological tissue to be treated, the end surface including a plurality of needles extendable a desired distance from the end surface.

23. (Previously Presented) The method of treating dermatological tissue of claim 22, further including causing the plurality of the extendable needles to extend a desired distance from the end surface.

24. (Previously Presented) The method of treating dermatological tissue of claim 22, further including energizing a motor coupled to the plurality of extendable needles to cause the plurality of the extendable needles to extend a desired distance from the end surface.

25. (Previously Presented) The method of treating dermatological tissue of claim 21, including placing a device inner surface on or near dermatological tissue to be treated, the inner surface including a plurality of needles extending a desired distance from the inner surface.

26. (Previously Presented) The method of treating dermatological tissue of claim 21, including placing a device inner surface on or near dermatological tissue to be treated, the inner surface including a plurality of needles extending a desired distance from the inner surface with a force sufficient to cause the plurality of needles to penetrate the dermatological tissue.

27. (Previously Presented) The method of treating dermatological tissue of claim 21, including directing a signal generator electrically coupled to the plurality of needles to produce pulsed radio frequency signals across the plurality of needles to form a bipolar pair.

28. (Previously Presented) The method of treating dermatological tissue of claim 21, including directing a signal generator electrically coupled to the plurality of needles to produce pulsed radio frequency signals across the plurality of needles, the plurality of needles to form a bipolar pair and affect dermatological tissue near the bipolar pair.

29. (Previously Presented) The method of treating dermatological tissue of claim 21, including directing the signal generator to produce periodic pulsed radio frequency signals across the plurality of needles for a predetermined time interval, each pulse having a width.

30. (Previously Presented) The method of treating dermatological tissue of claim 27, wherein the predetermined time interval is about 100ms to 500ms and the pulse width is about 100 microseconds to 500 microseconds.

31. (Previously Presented) An apparatus for treating dermatological tissue, comprising:

a device including a plurality of needles one of extending or extendable a desired distance from a surface, the desired distance selected to enable the plurality of needles to penetrate dermatological tissue; and

a signal generator electrically coupled to the plurality of extended needles to produce pulsed radio frequency signals across the plurality of needles to affect dermatological tissue near the plurality of needles.

32. (Previously Presented) The apparatus for treating dermatological tissue of claim 31, wherein the device includes an end surface configured to be placed on or near dermatological tissue to be treated, the end surface including a plurality of needles extendable a desired distance from the end surface.

33. (Previously Presented) The apparatus for treating dermatological tissue of claim 32, further including a mechanism for causing the plurality of the extendable needles to extend a desired distance from the end surface.

34. (Previously Presented) The apparatus for treating dermatological tissue of claim 32, further including a motor coupled to the plurality of extendable needles that may be directed to cause the plurality of the extendable needles to extend a desired distance from the end surface.

35. (Previously Presented) The apparatus for treating dermatological tissue of claim 31, wherein the device includes an inner surface including a plurality of needles extending a desired distance from the inner surface.

36. (Previously Presented) The apparatus for treating dermatological tissue of claim 31, wherein the signal generator produces pulsed radio frequency signals across the plurality of needles to form a bipolar pair.

37. (Previously Presented) The apparatus for treating dermatological tissue of claim 31, wherein the signal generator produces pulsed radio frequency signals across the plurality of needles to form a bipolar pair and affect dermatological tissue near the bipolar pair.

38. (Previously Presented) The apparatus for treating dermatological tissue of claim 31, wherein the signal generator produces periodic pulsed radio frequency signals across the plurality of needles for a predetermined time interval, each pulse having a width.

39. (Previously Presented) The apparatus for treating dermatological tissue of claim 38, wherein the predetermined time interval is about 100ms to 500ms.

40. (Previously Presented) The apparatus for treating dermatological tissue of claim 38, wherein the pulse width is about 100 microseconds to 500 microseconds.

## REMARKS

Status of claims:

Claims pending: 21-40

Claims added: *None*

Claims amended: *None*

Claims cancelled: *None*

Claims after entry: 21-40.

The Examiner has rejected Claims 21-40 on the ground of nonstatutory double patenting as being unpatentable over claims 1-20 of U.S. Patent No. 9,320,536. Applicant has filed a terminal disclaimer via www.uspto.gov to disclaim 9,320,536 and overcome the present rejection. Reconsideration is respectfully requested.

Applicant has made a diligent effort to place the claims in condition for allowance. However, should there remain unresolved issues that require adverse action, it is respectfully requested that the Examiner telephone Merle Richman, Applicants' Attorney at 858 320-2030 so that such issues may be resolved as expeditiously as possible.

For these reasons, and in view of the above amendments, this application is now considered to be in condition for allowance and such action is earnestly solicited.

Respectfully Submitted,

12/16/2016_____ /mwresq/_____

Date Merle Richman
Attorney/Agent for Applicant(s)
Reg. No. 38282

Merle Richman
Patent Attorney
Customer ID - 26338
PO Box 3333
La Jolla, CA 92038-3333
Tel. 858 320-2030

PTO/AIA/26 (04-13)
Approved for use through 04/30/2013. OMB 0651-0031
U.S. Patent and Trademark Office; U.S. DEPARTMENT OF COMMERCE
Under the Paperwork Reduction Act of 1995, no persons are required to respond to a collection of information unless it displays a valid OMB control number.

# TERMINAL DISCLAIMER TO OBVIATE A DOUBLE PATENTING REJECTION OVER A "PRIOR" PATENT

Docket Number (Optional)
NA001KR_US2

In re Application of: Na

Application No.: 15096686

Filed: 4/12/2016

For: METHOD, SYSTEM, AND APPARATUS FOR DERMATOLOGICAL TREATMENT

The applicant, Na, owner of 100 percent interest in the instant application hereby disclaims, except as provided below, the terminal part of the statutory term of any patent granted on the instant application which would extend beyond the expiration date of the full statutory term **prior patent** No. 9320536 as the term of said **prior patent** is presently shortened by any terminal disclaimer. The applicant hereby agrees that any patent so granted on the instant application shall be enforceable only for and during such period that it and the **prior patent** are commonly owned. This agreement runs with any patent granted on the instant application and is binding upon the grantee, its successors or assigns.

In making the above disclaimer, the applicant does not disclaim the terminal part of the term of any patent granted on the instant application that would extend to the expiration date of the full statutory term of the **prior patent**, "as the term of said **prior patent** is presently shortened by any terminal disclaimer," in the event that said **prior patent** later:

expires for failure to pay a maintenance fee;
is held unenforceable;
is found invalid by a court of competent jurisdiction;
is statutorily disclaimed in whole or terminally disclaimed under 37 CFR 1.321;
has all claims canceled by a reexamination certificate;
is reissued; or
is in any manner terminated prior to the expiration of its full statutory term as presently shortened by any terminal disclaimer.

Check either box 1 or 2 below, if appropriate.

1. ☐ The undersigned is the applicant. If the applicant is an assignee, the undersigned is authorized to act on behalf of the assignee.

I hereby knowledge that any willful false statements made are punishable under 18 U.S.C. 1001 by fine or imprisonment of not more than five (5) years, or both.

2. ☒ The undersigned is an attorney or agent of record. Reg. No. 38282

/mwresq/ — Signature

December 16, 2016 — Date

Merle Richman — Typed or printed name

Patent Attorney

858 351-2030 — Telephone Number

☒ Terminal disclaimer fee under 37 CFR 1.20(d) included.

**WARNING: Information on this form may become public. Credit card information should not be included on this form. Provide credit card information and authorization on PTO-2038.**

This collection of information is required by 37 CFR 1.321. The information is required to obtain or retain a benefit by the public which is to file (and by the USPTO to process) an application. Confidentiality is governed by 35 U.S.C. 122 and 37 CFR 1.11 and 1.14. This collection is estimated to take 12 minutes to complete, including gathering, preparing, and submitting the completed application form to the USPTO. Time will vary depending upon the individual case. Any comments on the amount of time you require to complete this form and/or suggestions for reducing this burden, should be sent to the Chief Information Officer, U.S. Patent and Trademark Office, U.S. Department of Commerce, P.O. Box 1450, Alexandria, VA 22313-1450. DO NOT SEND FEES OR COMPLETED FORMS TO THIS ADDRESS. **SEND TO: Commissioner for Patents, P.O. Box 1450, Alexandria, VA 22313-1450.**

If you need assistance in completing the form, call 1-800-PTO-9199 and select option 2.

Doc Code: TRAN.LET
Document Description: Transmittal Letter

PTO/SB/21 (07-09)
Approved for use through 07/31/2012. OMB 0651-0031
U.S. Patent and Trademark Office; U.S. DEPARTMENT OF COMMERCE
Under the Paper Reduction Act of 1995, no persons are required to respond to a collection of information unless it displays a valid OMB control number.

| **TRANSMITTAL FORM** *(to be used for all correspondence after initial filing)* | | Application Number | 15096686 |
|---|---|---|---|
| | | Filing Date | Apr 12, 2016 |
| | | First Named Inventor | Na, Jongju |
| | | Art Unit | 3733 |
| | | Examiner Name | David Comstock |
| Total Number of Pages in This Submission | | Attorney Docket Number | NA001KR_US2 |

## ENCLOSURES *(Check all that apply)*

- [ ] Fee Transmittal Form
  - [ ] Fee Attached
- [X] Amendment / Reply – 6 pages
  - [ ] After Final
  - [ ] Affidavits/declaration(s)
- [ ] Extension of Time Request
- [ ] Express Abandonment Request
- [ ] Information Disclosure Statement
- [ ] Certified Copy of Priority Document(s)
- [ ] Reply to Missing Parts/ Incomplete Application
  - [ ] Reply to Missing Parts under 37 CFR 1.52 or 1.53
- [ ] Drawing(s)
- [ ] Licensing-related Papers
- [ ] Petition
- [ ] Petition to Convert to a Provisional Application
- [ ] Power of Attorney, Revocation Change of Correspondence Address
- [X] Terminal Disclaimer
- [ ] Request for Refund
- [ ] CD, Number of CD(s) _____
  - [ ] Landscape Table on CD
- [ ] After Allowance Communication to TC
- [ ] Appeal Communication to Board of Appeals and Interferences
- [ ] Appeal Communication to TC **(Appeal Notice, Brief, Reply Brief)**
- [ ] Proprietary Information
- [ ] Status Letter
- [ ] Other Enclosure(s) (please identify below):

Remarks

## SIGNATURE OF APPLICANT, ATTORNEY, OR AGENT

| Firm Name | Merle W. Richman, Cust ID - 26338 | | |
|---|---|---|---|
| Signature | /mwresq/ | | |
| Printed name | Merle Richman | | |
| Date | December 16, 2016 | Reg. No. | 38282 |

## CERTIFICATE OF TRANSMISSION/MAILING

I hereby certify that this correspondence is being electronically transmitted to the USPTO or deposited with the United States Postal Service with sufficient postage as first class mail in an envelope addressed to: Commissioner for Patents, P.O. Box 1450, Alexandria, VA 22313-1450 on the date shown below.

| Signature | /mwresq/ | | |
|---|---|---|---|
| Typed or printed name | Merle Richman | Date | December 16, 2016 |

This collection of information is required by 37 CFR 1.5. The information is required to obtain or retain a benefit by the public which is to file (and by the USPTO to process) an application. Confidentiality is governed by 35 U.S.C. 122 and 37 CFR 1.11 and 1.14. This collection is estimated to take 2 hours to complete, including gathering, preparing, and submitting the completed application form to the USPTO. Time will vary depending upon the individual case. Any comments on the amount of time you require to complete this form and/or suggestions for reducing this burden, should be sent to the Chief Information Officer, U.S. Patent and Trademark Office, U.S. Department of Commerce, P.O. Box 1450, Alexandria, VA 22313-1450. DO NOT SEND FEES OR COMPLETED FORMS TO THIS ADDRESS. **SEND TO: Commissioner for Patents, P.O. Box 1450, Alexandria, VA 22313-1450.**

*In you need assistance in completing the form, call 1-800-PTO-9199 and select option 2.*

# Electronic Patent Application Fee Transmittal

| | |
|---|---|
| **Application Number:** | 15096686 |
| **Filing Date:** | 12-Apr-2016 |
| **Title of Invention:** | Method, system, and apparatus for dermatological treatment |
| **First Named Inventor/Applicant Name:** | Jongju Na |
| **Filer:** | Merle W. Richman |
| **Attorney Docket Number:** | NA001KR_US2 |

Filed as Small Entity

**Filing Fees for Utility under 35 USC 111(a)**

| Description | Fee Code | Quantity | Amount | Sub-Total in USD($) |
|---|---|---|---|---|
| **Basic Filing:** | | | | |
| **Pages:** | | | | |
| **Claims:** | | | | |
| **Miscellaneous-Filing:** | | | | |
| **Petition:** | | | | |
| **Patent-Appeals-and-Interference:** | | | | |
| **Post-Allowance-and-Post-Issuance:** | | | | |
| **Extension-of-Time:** | | | | |

| Description | Fee Code | Quantity | Amount | Sub-Total in USD($) |
|---|---|---|---|---|
| **Miscellaneous:** | | | | |
| STATUTORY OR TERMINAL DISCLAIMER | 2814 | 1 | 160 | 160 |
| | | **Total in USD ($)** | | **160** |

# Electronic Acknowledgement Receipt

| | |
|---|---|
| **EFS ID:** | 27820017 |
| **Application Number:** | 15096686 |
| **International Application Number:** | |
| **Confirmation Number:** | 2620 |
| **Title of Invention:** | Method, system, and apparatus for dermatological treatment |
| **First Named Inventor/Applicant Name:** | Jongju Na |
| **Customer Number:** | 26338 |
| **Filer:** | Merle W. Richman |
| **Filer Authorized By:** | |
| **Attorney Docket Number:** | NA001KR_US2 |
| **Receipt Date:** | 16-DEC-2016 |
| **Filing Date:** | 12-APR-2016 |
| **Time Stamp:** | 18:24:57 |
| **Application Type:** | Utility under 35 USC 111(a) |

## Payment information:

| | |
|---|---|
| Submitted with Payment | yes |
| Payment Type | CARD |
| Payment was successfully received in RAM | $160 |
| RAM confirmation Number | 121916INTEFSW18304500 |
| Deposit Account | |
| Authorized User | |
| The Director of the USPTO is hereby authorized to charge indicated fees and credit any overpayment as follows: | |

## File Listing:

| Document Number | Document Description | File Name | File Size(Bytes)/ Message Digest | Multi Part /.zip | Pages (if appl.) |
|---|---|---|---|---|---|
| 1 | Amendment/Req. Reconsideration-After Non-Final Reject | NA001KR_US2-ROA-2016-11-30.pdf | 112218<br>d1b16f99f1feb9f27b041eb1ad62a3514a9c70b1 | no | 6 |
| **Warnings:** | | | | | |
| **Information:** | | | | | |
| 2 | Terminal Disclaimer Filed | NA001KR_US2-terminal-disclaimer-2016-11-30.pdf | 93163<br>5af2cd532154db4b4b00ca48cd6a8f88edc5ed7f | no | 1 |
| **Warnings:** | | | | | |
| **Information:** | | | | | |
| 3 | Transmittal Letter | NA001KR_US2-TROA-2016-11-30.pdf | 111484<br>da1eed1ca47575b8e7c98f09e660c01673e6c4f0 | no | 1 |
| **Warnings:** | | | | | |
| **Information:** | | | | | |
| 4 | Fee Worksheet (SB06) | fee-info.pdf | 30521<br>6051eb6bb0face1acadb37ca676d4b3a890f1c5a | no | 2 |
| **Warnings:** | | | | | |
| **Information:** | | | | | |
| | | **Total Files Size (in bytes):** | 347386 | | |

**This Acknowledgement Receipt evidences receipt on the noted date by the USPTO of the indicated documents, characterized by the applicant, and including page counts, where applicable. It serves as evidence of receipt similar to a Post Card, as described in MPEP 503.**

**New Applications Under 35 U.S.C. 111**

**If a new application is being filed and the application includes the necessary components for a filing date (see 37 CFR 1.53(b)-(d) and MPEP 506), a Filing Receipt (37 CFR 1.54) will be issued in due course and the date shown on this Acknowledgement Receipt will establish the filing date of the application.**

**National Stage of an International Application under 35 U.S.C. 371**

**If a timely submission to enter the national stage of an international application is compliant with the conditions of 35 U.S.C. 371 and other applicable requirements a Form PCT/DO/EO/903 indicating acceptance of the application as a national stage submission under 35 U.S.C. 371 will be issued in addition to the Filing Receipt, in due course.**

**New International Application Filed with the USPTO as a Receiving Office**

**If a new international application is being filed and the international application includes the necessary components for an international filing date (see PCT Article 11 and MPEP 1810), a Notification of the International Application Number and of the International Filing Date (Form PCT/RO/105) will be issued in due course, subject to prescriptions concerning national security, and the date shown on this Acknowledgement Receipt will establish the international filing date of the application.**

| Application Number | Application/Control No. | Applicant(s)/Patent under Reexamination | |
|---|---|---|---|
| | 15/096,686 | NA, JONGJU | |

| Document Code - DISQ | Internal Document – DO NOT MAIL |
|---|---|

| TERMINAL DISCLAIMER | ☐ APPROVED | ☒ DISAPPROVED |
|---|---|---|
| **Date Filed : 16 December, 2016** | **This patent is subject to a Terminal Disclaimer** | |

## Approved/Disapproved by:

CHARRISSA BROWN

**Technology Center:** PLRC

**Telephone:** (571)272-1558

The terminal disclaimer identifies a party who is not the applicant (only for applications filed on or after September 16, 2012; See FP 14.26.10):

For cases filed on/after 9/16/12, 37 CFR 1.321 specifies that only the applicant can disclaim, and the terminal disclaimer must specify the extent of the applicant's ownership.

Below is what needs to be done to correct the defects:

A request under 37 CFR 1.46(c) to change the applicant needs to be filed, which is (1) a request, signed by a 1.33(b) party, (2) a corrected ADS (37 CFR 1.76(c)) that identifies the "new" applicant in the applicant information, and is underlined since it is new, and (3) a 3.73(c) statement showing chain of title to the new applicant. Along with the § 1.46(c) request we need a POA that gives power to the attorney who is signing the TD, along with another copy of the TD, or a TD that is signed by the applicant.

Note: The applicant name need to be spelled Completely out on the TD just as it is on the ADS.

UNITED STATES PATENT AND TRADEMARK OFFICE

UNITED STATES DEPARTMENT OF COMMERCE
United States Patent and Trademark Office
Address: COMMISSIONER FOR PATENTS
P.O. Box 1450
Alexandria, Virginia 22313-1450
www.uspto.gov

| APPLICATION NO. | FILING DATE | FIRST NAMED INVENTOR | ATTORNEY DOCKET NO. | CONFIRMATION NO. |
|---|---|---|---|---|
| 15/096,686 | 04/12/2016 | Jongju Na | NA001KR_US2 | 2620 |

26338 7590 04/06/2017

MERLE W. RICHMAN, III
P.O. BOX 3333
LA JOLLA, CA 92038

| EXAMINER |
|---|
| COMSTOCK, DAVID C |

| ART UNIT | PAPER NUMBER |
|---|---|
| 3733 | |

| MAIL DATE | DELIVERY MODE |
|---|---|
| 04/06/2017 | PAPER |

**Please find below and/or attached an Office communication concerning this application or proceeding.**

The time period for reply, if any, is set in the attached communication.

| Office Action Summary | Application No. 15/096,686 | Applicant(s) NA, JONGJU | |
|---|---|---|---|
| | Examiner DAVID C. COMSTOCK | Art Unit 3733 | AIA (First Inventor to File) Status Yes |

*-- The MAILING DATE of this communication appears on the cover sheet with the correspondence address --*

**Period for Reply**

A SHORTENED STATUTORY PERIOD FOR REPLY IS SET TO EXPIRE 3 MONTHS FROM THE MAILING DATE OF THIS COMMUNICATION.

- Extensions of time may be available under the provisions of 37 CFR 1.136(a). In no event, however, may a reply be timely filed after SIX (6) MONTHS from the mailing date of this communication.
- If NO period for reply is specified above, the maximum statutory period will apply and will expire SIX (6) MONTHS from the mailing date of this communication.
- Failure to reply within the set or extended period for reply will, by statute, cause the application to become ABANDONED (35 U.S.C. § 133). Any reply received by the Office later than three months after the mailing date of this communication, even if timely filed, may reduce any earned patent term adjustment. See 37 CFR 1.704(b).

**Status**

1)☒ Responsive to communication(s) filed on *16 December 2016*.

☐ A declaration(s)/affidavit(s) under **37 CFR 1.130(b)** was/were filed on _____.

2a)☒ This action is **FINAL**. 2b)☐ This action is non-final.

3)☐ An election was made by the applicant in response to a restriction requirement set forth during the interview on _____; the restriction requirement and election have been incorporated into this action.

4)☐ Since this application is in condition for allowance except for formal matters, prosecution as to the merits is closed in accordance with the practice under *Ex parte Quayle*, 1935 C.D. 11, 453 O.G. 213.

**Disposition of Claims***

5)☒ Claim(s) *21-40* is/are pending in the application.

5a) Of the above claim(s) _____ is/are withdrawn from consideration.

6)☐ Claim(s) _____ is/are allowed.

7)☒ Claim(s) *21-40* is/are rejected.

8)☐ Claim(s) _____ is/are objected to.

9)☐ Claim(s) _____ are subject to restriction and/or election requirement.

* If any claims have been determined allowable, you may be eligible to benefit from the **Patent Prosecution Highway** program at a participating intellectual property office for the corresponding application. For more information, please see http://www.uspto.gov/patents/init_events/pph/index.jsp or send an inquiry to PPHfeedback@uspto.gov.

**Application Papers**

10)☐ The specification is objected to by the Examiner.

11)☒ The drawing(s) filed on *12 April 2016* is/are: a)☒ accepted or b)☐ objected to by the Examiner.

Applicant may not request that any objection to the drawing(s) be held in abeyance. See 37 CFR 1.85(a).

Replacement drawing sheet(s) including the correction is required if the drawing(s) is objected to. See 37 CFR 1.121(d).

**Priority under 35 U.S.C. § 119**

12)☒ Acknowledgment is made of a claim for foreign priority under 35 U.S.C. § 119(a)-(d) or (f).

**Certified copies:**

a)☒ All b)☐ Some** c)☐ None of the:

1.☐ Certified copies of the priority documents have been received.

2.☒ Certified copies of the priority documents have been received in Application No. 13825083.

3.☐ Copies of the certified copies of the priority documents have been received in this National Stage application from the International Bureau (PCT Rule 17.2(a)).

** See the attached detailed Office action for a list of the certified copies not received.

**Attachment(s)**

1) ☐ Notice of References Cited (PTO-892)

2) ☐ Information Disclosure Statement(s) (PTO/SB/08a and/or PTO/SB/08b) Paper No(s)/Mail Date _____.

3) ☐ Interview Summary (PTO-413) Paper No(s)/Mail Date. _____ .

4) ☐ Other: _____.

## DETAILED ACTION

### *Notice of Pre-AIA or AIA Status*

The present application, filed on or after March 16, 2013, is being examined under the first inventor to file provisions of the AIA.

### *Double Patenting*

The nonstatutory double patenting rejection is based on a judicially created doctrine grounded in public policy (a policy reflected in the statute) so as to prevent the unjustified or improper timewise extension of the "right to exclude" granted by a patent and to prevent possible harassment by multiple assignees. A nonstatutory double patenting rejection is appropriate where the conflicting claims are not identical, but at least one examined application claim is not patentably distinct from the reference claim(s) because the examined application claim is either anticipated by, or would have been obvious over, the reference claim(s). See, e.g., *In re Berg*, 140 F.3d 1428, 46 USPQ2d 1226 (Fed. Cir. 1998); *In re Goodman*, 11 F.3d 1046, 29 USPQ2d 2010 (Fed. Cir. 1993); *In re Longi*, 759 F.2d 887, 225 USPQ 645 (Fed. Cir. 1985); *In re Van Ornum*, 686 F.2d 937, 214 USPQ 761 (CCPA 1982); *In re Vogel*, 422 F.2d 438, 164 USPQ 619 (CCPA 1970); *In re Thorington*, 418 F.2d 528, 163 USPQ 644 (CCPA 1969).

A timely filed terminal disclaimer in compliance with 37 CFR 1.321(c) or 1.321(d) may be used to overcome an actual or provisional rejection based on nonstatutory double patenting provided the reference application or patent either is shown to be commonly owned with the examined application, or claims an invention made as a result of activities undertaken within the scope of a joint research agreement. See MPEP § 717.02 for applications subject to examination under the first inventor to file provisions of the AIA as explained in MPEP § 2159. See MPEP §§ 706.02(l)(1) - 706.02(l)(3) for applications not subject to examination under the first inventor to file provisions of the AIA. A terminal disclaimer must be signed in compliance with 37 CFR 1.321(b).

The USPTO Internet website contains terminal disclaimer forms which may be used. Please visit www.uspto.gov/patent/patents-forms. The filing date of the application in which the form is filed determines what form (e.g., PTO/SB/25, PTO/SB/26, PTO/AIA/25, or PTO/AIA/26) should be used. A web-based eTerminal Disclaimer may be filled out completely online using web-screens. An eTerminal

Disclaimer that meets all requirements is auto-processed and approved immediately upon submission. For more information about eTerminal Disclaimers, refer to www.uspto.gov/patents/process/file/efs/guidance/eTD-info-I.jsp.

Claims 21-40 are rejected on the ground of nonstatutory double patenting as being unpatentable over claims 1-20 of U.S. Patent No. 9,320,536. Although the claims at issue are not identical, they are not patentably distinct from each other because the differences amount to minor changes in the phraseology and arrangement of claim limitations. Both the noted issued patent and the present claims are directed to substantially the same invention of a dermatological treatment system utilizing deployable needles, an energized motor, electrical signals, a signal generator, and method of using the same to deliver energy to the needles and dermatological tissue.

***Terminal Disclaimer***

The terminal disclaimer does not comply with 37 CFR 1.321. The application was filed on or after September 16, 2012. The party identified in the terminal disclaimer is not the applicant of record. Only the applicant can disclaim, and the terminal disclaimer must specify the extent of the applicant's ownership. A request to change the applicant under 37 CFR 1.46(c) must be filed which is (1) a request, signed by a 1.33(b) party, (2) includes a corrected application data sheet (37 CFR 1.76(c)) that identifies by underlining the "new" applicant in the applicant information, and (3) a 3.73(c) statement showing chain of title to the new applicant. Along with the 1.46(c) request, a power of attorney must be filed for the attorney signing the terminal disclaimer, along with another copy of the terminal disclaimer, or a terminal disclaimer that is signed by the Applicant. Please include the full name of the Applicant on the terminal disclaimer as it appears on the application data sheet.

***Response to Arguments***

Applicant's arguments filed 16 December 2016 have been fully considered but they are not persuasive.

It is noted that the Terminal Disclaimer has not been approved for the reasons noted above. Accordingly, the claims remain subject to the outstanding double patenting rejection.

***Conclusion***

**THIS ACTION IS MADE FINAL.** Applicant is reminded of the extension of time policy as set forth in 37 CFR 1.136(a).

A shortened statutory period for reply to this final action is set to expire THREE MONTHS from the mailing date of this action. In the event a first reply is filed within TWO MONTHS of the mailing date of this final action and the advisory action is not mailed until after the end of the THREE-MONTH shortened statutory period, then the shortened statutory period will expire on the date the advisory action is mailed, and any extension fee pursuant to 37 CFR 1.136(a) will be calculated from the mailing date of the advisory action. In no event, however, will the statutory period for reply expire later than SIX MONTHS from the mailing date of this final action.

Any inquiry concerning this communication or earlier communications from the examiner should be directed to David Comstock whose telephone number is (571) 272-4710. The examiner can normally be reached Monday-Friday, 9 a.m. - 6 p.m.

If attempts to reach the examiner by telephone are unsuccessful, ***please contact*** **the examiner's supervisor, SPE, *at* (571) 272-4760**. The fax phone number for the organization where this application or proceeding is assigned is 571-273-8300.

Information regarding the status of an application may be obtained from the Patent Application Information Retrieval (PAIR) system. Status information for published applications may be obtained from either Private PAIR or Public PAIR. Status information for unpublished applications is available through Private PAIR only. For more information about the PAIR system, see http://pair-direct.uspto.gov. Should you have questions on access to the Private PAIR system, contact the Electronic Business Center (EBC) at 866-217-9197 (toll-free). If you would like assistance from a USPTO Customer Service Representative or access to the automated information system, call 800-786-9199 (IN USA OR CANADA) or 571-272-1000.

/DAVID C COMSTOCK/
Examiner, Art Unit 3733
/PEDRO PHILOGENE/
Primary Examiner, Art Unit 3733

**EAST Search History**

**EAST Search History (Prior Art)**

| Ref # | Hits | Search Query | DBs | Default Operator | Plurals | Time Stamp |
|---|---|---|---|---|---|---|
| L1 | 12250 | ((600/246) or (601/2) or (604/20,21,46,117) or (606/9) or (607/102,189) or (424/1.11)).CCLS. | US-PGPUB; USPAT; USOCR | OR | OFF | 2017/04/02 13:55 |
| L2 | 9603 | A61B17/320068.cpc. A61B1/06,20.cpc. A61N1/30.cpc. A61N5/0616.cpc. A61M37/00,0015.cpc. A61M37/00,0015.cpc. A61M2037/0007,0046,0061.cpc. | US-PGPUB; USPAT; USOCR | OR | OFF | 2017/04/02 13:59 |
| L3 | 798 | (needle same motor) and (dermatological or dermalogical or dermis or skin) and electric$3 and (led or "l.e.d." or "light emitting diode") | US-PGPUB; USPAT; USOCR | OR | OFF | 2017/04/02 14:00 |
| L5 | 485 | (1 2 3) and @pd>"20161128" | US-PGPUB; USPAT; USOCR | OR | OFF | 2017/04/02 14:01 |

**4/ 2/ 2017 2:33:12 PM**
**C:\ Users\ dcomstock\ Documents\ EAST\ Workspaces\ untitled.wsp**

| Index of Claims | Application/Control No. | Applicant(s)/Patent Under Reexamination |
|---|---|---|
| | 15096686 | NA, JONGJU |
| | Examiner | Art Unit |
| | DAVID C COMSTOCK | 3733 |

| | | | | | | | |
|---|---|---|---|---|---|---|---|
| ✓ | Rejected | - | Cancelled | N | Non-Elected | A | Appeal |
| = | Allowed | ÷ | Restricted | I | Interference | O | Objected |

☐ Claims renumbered in the same order as presented by applicant ☐ CPA ☐ T.D. ☐ R.1.47

| CLAIM | | DATE | | | | | | | | |
|---|---|---|---|---|---|---|---|---|---|---|
| Final | Original | 11/28/2016 | 04/02/2017 | | | | | | | |
| | 1 | - | - | | | | | | | |
| | 2 | - | - | | | | | | | |
| | 3 | - | - | | | | | | | |
| | 4 | - | - | | | | | | | |
| | 5 | - | - | | | | | | | |
| | 6 | - | - | | | | | | | |
| | 7 | - | - | | | | | | | |
| | 8 | - | - | | | | | | | |
| | 9 | - | - | | | | | | | |
| | 10 | - | - | | | | | | | |
| | 11 | - | - | | | | | | | |
| | 12 | - | - | | | | | | | |
| | 13 | - | - | | | | | | | |
| | 14 | - | - | | | | | | | |
| | 15 | - | - | | | | | | | |
| | 16 | - | - | | | | | | | |
| | 17 | - | - | | | | | | | |
| | 18 | - | - | | | | | | | |
| | 19 | - | - | | | | | | | |
| | 20 | - | - | | | | | | | |
| | 21 | ✓ | ✓ | | | | | | | |
| | 22 | ✓ | ✓ | | | | | | | |
| | 23 | ✓ | ✓ | | | | | | | |
| | 24 | ✓ | ✓ | | | | | | | |
| | 25 | ✓ | ✓ | | | | | | | |
| | 26 | ✓ | ✓ | | | | | | | |
| | 27 | ✓ | ✓ | | | | | | | |
| | 28 | ✓ | ✓ | | | | | | | |
| | 29 | ✓ | ✓ | | | | | | | |
| | 30 | ✓ | ✓ | | | | | | | |
| | 31 | ✓ | ✓ | | | | | | | |
| | 32 | ✓ | ✓ | | | | | | | |
| | 33 | ✓ | ✓ | | | | | | | |
| | 34 | ✓ | ✓ | | | | | | | |
| | 35 | ✓ | ✓ | | | | | | | |
| | 36 | ✓ | ✓ | | | | | | | |

| Index of Claims | Application/Control No. | Applicant(s)/Patent Under Reexamination |
|---|---|---|
| | 15096686 | NA, JONGJU |
| | Examiner | Art Unit |
| | DAVID C COMSTOCK | 3733 |

| | | | | | | | |
|---|---|---|---|---|---|---|---|
| ✓ | Rejected | - | Cancelled | N | Non-Elected | A | Appeal |
| = | Allowed | ÷ | Restricted | I | Interference | O | Objected |

☐ Claims renumbered in the same order as presented by applicant ☐ CPA ☐ T.D. ☐ R.1.47

| CLAIM | | DATE | | | | | | | | |
|---|---|---|---|---|---|---|---|---|---|---|
| Final | Original | 11/28/2016 | 04/02/2017 | | | | | | | |
| | 37 | ✓ | ✓ | | | | | | | |
| | 38 | ✓ | ✓ | | | | | | | |
| | 39 | ✓ | ✓ | | | | | | | |
| | 40 | ✓ | ✓ | | | | | | | |

| Search Notes | Application/Control No. | Applicant(s)/Patent Under Reexamination |
|---|---|---|
| | 15096686 | NA, JONGJU |
| | Examiner | Art Unit |
| | DAVID C COMSTOCK | 3733 |

## CPC- SEARCHED

| Symbol | Date | Examiner |
|---|---|---|
| A61B17/320068 | 11/28/2016 | /DC/ |
| A61B1/06, 20 | 11/28/2016 | /DC/ |
| A61N 1/30 | 11/28/2016 | /DC/ |
| A61N5/0616 | 11/28/2016 | /DC/ |
| A61M37/00, 0015 | 11/28/2016 | /DC/ |
| A61M2037/0007, 0046, 0061 | 11/28/2016 | /DC/ |
| Search updated | 4/2/2017 | /DC/ |

## CPC COMBINATION SETS - SEARCHED

| Symbol | Date | Examiner |
|---|---|---|
| | | |

## US CLASSIFICATION SEARCHED

| Class | Subclass | Date | Examiner |
|---|---|---|---|
| 600 | 246 | 11/28/2016 | /DC/ |
| 601 | 2 | 11/28/2016 | /DC/ |
| 604 | 20, 21, 46, 117 | 11/28/2016 | /DC/ |
| 606 | 9 | 11/28/2016 | /DC/ |
| 607 | 102, 189 | 11/28/2016 | /DC/ |
| 424 | 1.11 | 11/28/2016 | /DC/ |
| Search updated | | 4/2/2017 | /DC/ |

## SEARCH NOTES

| Search Notes | Date | Examiner |
|---|---|---|
| EAST text search--see printout | 11/28/2016 | /DC/ |
| Inventor name search--see EAST printout | 11/28/2016 | /DC/ |
| EAST text search updated--see printout | 4/2/2017 | /DC/ |

| /DAVID C COMSTOCK/<br>Examiner.Art Unit 3733 | |
|---|---|

| INTERFERENCE SEARCH | | | |
|---|---|---|---|
| US Class/ CPC Symbol | US Subclass / CPC Group | Date | Examiner |
| | | | |

| | |
|---|---|
| /DAVID C COMSTOCK/<br>Examiner.Art Unit 3733 | |

Doc Code: PA..
Document Description: Power of Attorney

PTO/AIA/82A (07-13)
Approved for use through 11/30/2014. OMB 0651-0051
U.S. Patent and Trademark Office; U.S. DEPARTMENT OF COMMERCE
Under the Paperwork Reduction Act of 1995, no persons are required to respond to a collection of information unless it displays a valid OMB control number.

# TRANSMITTAL FOR POWER OF ATTORNEY TO ONE OR MORE REGISTERED PRACTITIONERS

NOTE: This form is to be submitted with the Power of Attorney by Applicant form (PTO/AIA/82B) to identify the application to which the Power of Attorney is directed, in accordance with 37 CFR 1.5, unless the application number and filing date are identified in the Power of Attorney by Applicant form. If neither form PTO/AIA/82A nor form PTO/AIA82B identifies the application to which the Power of Attorney is directed, the Power of Attorney will not be recognized in the application.

| | |
|---|---|
| Application Number | 15096686 |
| Filing Date | 4/12/2016 |
| First Named Inventor | Mr. Jongju Na |
| Title | METHOD, SYSTEM, AND APPARATUS FOR DERMATOLOGICAL TREATMENT |
| Art Unit | 3733 |
| Examiner Name | David C Comstock |
| Attorney Docket Number | NA001KR_US2 |

**SIGNATURE of Applicant or Patent Practitioner**

| | | | |
|---|---|---|---|
| Signature | /mwresq/ | Date (Optional) | 4/24/2017 |
| Name | Merle Richman | Registration Number | 38282 |
| Title (if Applicant is a juristic entity) | | | |
| Applicant Name (if Applicant is a juristic entity) | | | |

**NOTE:** This form must be signed in accordance with 37 CFR 1.33. See 37 CFR 1.4(d) for signature requirements and certifications. If more than one applicant, use multiple forms.

☐ *Total of _____ forms are submitted.

This collection of information is required by 37 CFR 1.131, 1.32, and 1.33. The information is required to obtain or retain a benefit by the public which is to file (and by the USPTO to process) an application. Confidentiality is governed by 35 U.S.C. 122 and 37 CFR 1.11 and 1.14. This collection is estimated to take 3 minutes to complete, including gathering, preparing, and submitting the completed application form to the USPTO. Time will vary depending upon the individual case. Any comments on the amount of time you require to complete this form and/or suggestions for reducing this burden, should be sent to the Chief Information Officer, U.S. Patent and Trademark Office, U.S. Department of Commerce, P.O. Box 1450, Alexandria, VA 22313-1450. DO NOT SEND FEES OR COMPLETED FORMS TO THIS ADDRESS. **SEND TO: Commissioner for Patents, P.O. Box 1450, Alexandria, VA 22313-1450.**

*If you need assistance in completing the form, call 1-800-PTO-9199 and select option 2.*

Doc Code: PA..
Document Description: Power of Attorney

PTO/AIA/82B (07-13)
Approved for use through 11/30/2014. OMB 0651-0051
U.S. Patent and Trademark Office; U.S. DEPARTMENT OF COMMERCE
Under the Paperwork Reduction Act of 1995, no persons are required to respond to a collection of information unless it displays a valid OMB control number

# POWER OF ATTORNEY BY APPLICANT

I hereby revoke all previous powers of attorney given in the application identified in either the attached transmittal letter or the boxes below.

| Application Number | Filing Date |
|---|---|
| 15096686 | 4/12/2016 |

(Note: The boxes above may be left blank if information is provided on form PTO/AIA/82A.)

☑ I hereby appoint the Patent Practitioner(s) associated with the following Customer Number as my/our attorney(s) or agent(s), and to transact all business in the United States Patent and Trademark Office connected therewith for the application referenced in the attached transmittal letter (form PTO/AIA/82A) or identified above: 26338

**OR**

☐ I hereby appoint Practitioner(s) named in the attached list (form PTO/AIA/82C) as my/our attorney(s) or agent(s), and to transact all business in the United States Patent and Trademark Office connected therewith for the patent application referenced in the attached transmittal letter (form PTO/AIA/82A) or identified above. (Note: Complete form PTO/AIA/82C.)

**Please recognize or change the correspondence address for the application identified in the attached transmittal letter or the boxes above to:**

☑ The address associated with the above-mentioned Customer Number

**OR**

☐ The address associated with Customer Number:

**OR**

| | | | | | |
|---|---|---|---|---|---|
| Firm or Individual Name | | | | | |
| Address | | | | | |
| City | | State | | Zip | |
| Country | | | | | |
| Telephone | | Email | | | |

I am the Applicant (if the Applicant is a juristic entity, list the Applicant name in the box):

☑ Inventor or Joint Inventor (title not required below)

☐ Legal Representative of a Deceased or Legally Incapacitated Inventor (title not required below)

☐ Assignee or Person to Whom the Inventor is Under an Obligation to Assign (provide signer's title if applicant is a juristic entity)

☐ Person Who Otherwise Shows Sufficient Proprietary Interest (e.g., a petition under 37 CFR 1.46(b)(2) was granted in the application or is concurrently being filed with this document) (provide signer's title if applicant is a juristic entity)

**SIGNATURE of Applicant for Patent**

The undersigned (whose title is supplied below) is authorized to act on behalf of the applicant (e.g., where the applicant is a juristic entity).

| | | | |
|---|---|---|---|
| Signature | | Date (Optional) | 4/21/2017 |
| Name | Mr. Jongju Na | | |
| Title | | | |

**NOTE:** Signature - This form must be signed by the applicant in accordance with 37 CFR 1.33. See 37 CFR 1.4 for signature requirements and certifications. If more than one applicant, use multiple forms.

☐ Total of forms are submitted.

This collection of information is required by 37 CFR 1.131, 1.32, and 1.33. The information is required to obtain or retain a benefit by the public which is to file (and by the USPTO to process) an application. Confidentiality is governed by 35 U.S.C. 122 and 37 CFR 1.11 and 1.14. This collection is estimated to take 3 minutes to complete, including gathering, preparing, and submitting the completed application form to the USPTO. Time will vary depending upon the individual case. Any comments on the amount of time you require to complete this form and/or suggestions for reducing this burden, should be sent to the Chief Information Officer, U.S. Patent and Trademark Office, U.S. Department of Commerce, P.O. Box 1450, Alexandria, VA 22313-1450. DO NOT SEND FEES OR COMPLETED FORMS TO THIS ADDRESS. **SEND TO: Commissioner for Patents, P.O. Box 1450, Alexandria, VA 22313-1450.**

*If you need assistance in completing the form, call 1-800-PTO-9199 and select option 2.*

PTO/AIA/82C (07-13)
Approved for use through 11/30/2014. OMB 0651-0051
U.S. Patent and Trademark Office; U.S. DEPARTMENT OF COMMERCE
Under the Paperwork Reduction Act of 1995, no persons are required to respond to a collection of information unless it displays a valid OMB control number

# POWER OF ATTORNEY BY APPLICANT

No more than ten (10) patent practitioners total may be appointed as set forth below by name and registration number. This page need not be submitted if appointing the Patent Practitioner(s) associated with a Customer Number (see form PTO/AIA/82B):

| Name | Registration Number |
|---|---|
| | |
| | |
| | |
| | |
| | |
| | |
| | |
| | |
| | |
| | |

# Privacy Act Statement

The **Privacy Act of 1974 (P.L. 93-579)** requires that you be given certain information in connection with your submission of the attached form related to a patent application or patent. Accordingly, pursuant to the requirements of the Act, please be advised that: (1) the general authority for the collection of this information is 35 U.S.C. 2(b)(2); (2) furnishing of the information solicited is voluntary; and (3) the principal purpose for which the information is used by the U.S. Patent and Trademark Office is to process and/or examine your submission related to a patent application or patent. If you do not furnish the requested information, the U.S. Patent and Trademark Office may not be able to process and/or examine your submission, which may result in termination of proceedings or abandonment of the application or expiration of the patent.

The information provided by you in this form will be subject to the following routine uses:

1. The information on this form will be treated confidentially to the extent allowed under the Freedom of Information Act (5 U.S.C. 552) and the Privacy Act (5 U.S.C. 552a). Records from this system of records may be disclosed to the Department of Justice to determine whether the Freedom of Information Act requires disclosure of these records.
2. A record from this system of records may be disclosed, as a routine use, in the course of presenting evidence to a court, magistrate, or administrative tribunal, including disclosures to opposing counsel in the course of settlement negotiations.
3. A record in this system of records may be disclosed, as a routine use, to a Member of Congress submitting a request involving an individual, to whom the record pertains, when the individual has requested assistance from the Member with respect to the subject matter of the record.
4. A record in this system of records may be disclosed, as a routine use, to a contractor of the Agency having need for the information in order to perform a contract. Recipients of information shall be required to comply with the requirements of the Privacy Act of 1974, as amended, pursuant to 5 U.S.C. 552a(m).
5. A record related to an International Application filed under the Patent Cooperation Treaty in this system of records may be disclosed, as a routine use, to the International Bureau of the World Intellectual Property Organization, pursuant to the Patent Cooperation Treaty.
6. A record in this system of records may be disclosed, as a routine use, to another federal agency for purposes of National Security review (35 U.S.C. 181) and for review pursuant to the Atomic Energy Act (42 U.S.C. 218(c)).
7. A record from this system of records may be disclosed, as a routine use, to the Administrator, General Services, or his/her designee, during an inspection of records conducted by GSA as part of that agency's responsibility to recommend improvements in records management practices and programs, under authority of 44 U.S.C. 2904 and 2906. Such disclosure shall be made in accordance with the GSA regulations governing inspection of records for this purpose, and any other relevant (i.e., GSA or Commerce) directive. Such disclosure shall not be used to make determinations about individuals.
8. A record from this system of records may be disclosed, as a routine use, to the public after either publication of the application pursuant to 35 U.S.C. 122(b) or issuance of a patent pursuant to 35 U.S.C. 151. Further, a record may be disclosed, subject to the limitations of 37 CFR 1.14, as a routine use, to the public if the record was filed in an application which became abandoned or in which the proceedings were terminated and which application is referenced by either a published application, an application open to public inspections or an issued patent.
9. A record from this system of records may be disclosed, as a routine use, to a Federal, State, or local law enforcement agency, if the USPTO becomes aware of a violation or potential violation of law or regulation.

# Electronic Acknowledgement Receipt

| | |
|---|---|
| **EFS ID:** | 29006817 |
| **Application Number:** | 15096686 |
| **International Application Number:** | |
| **Confirmation Number:** | 2620 |
| **Title of Invention:** | Method, system, and apparatus for dermatological treatment |
| **First Named Inventor/Applicant Name:** | Jongju Na |
| **Customer Number:** | 26338 |
| **Filer:** | Merle W. Richman |
| **Filer Authorized By:** | |
| **Attorney Docket Number:** | NA001KR_US2 |
| **Receipt Date:** | 24-APR-2017 |
| **Filing Date:** | 12-APR-2016 |
| **Time Stamp:** | 14:35:53 |
| **Application Type:** | Utility under 35 USC 111(a) |

## Payment information:

| | |
|---|---|
| Submitted with Payment | no |

## File Listing:

| Document Number | Document Description | File Name | File Size(Bytes)/ Message Digest | Multi Part /.zip | Pages (if appl.) |
|---|---|---|---|---|---|
| 1 | Power of Attorney | na001kr_us2_aia0082.pdf | 208894<br>174262ce85d606e674f9e6acba3194ad6c23ed20 | no | 4 |

**Warnings:**

| Information: | |
|---|---|
| Total Files Size (in bytes): | 208894 |

**This Acknowledgement Receipt evidences receipt on the noted date by the USPTO of the indicated documents, characterized by the applicant, and including page counts, where applicable. It serves as evidence of receipt similar to a Post Card, as described in MPEP 503.**

**New Applications Under 35 U.S.C. 111**

**If a new application is being filed and the application includes the necessary components for a filing date (see 37 CFR 1.53(b)-(d) and MPEP 506), a Filing Receipt (37 CFR 1.54) will be issued in due course and the date shown on this Acknowledgement Receipt will establish the filing date of the application.**

**National Stage of an International Application under 35 U.S.C. 371**

**If a timely submission to enter the national stage of an international application is compliant with the conditions of 35 U.S.C. 371 and other applicable requirements a Form PCT/DO/EO/903 indicating acceptance of the application as a national stage submission under 35 U.S.C. 371 will be issued in addition to the Filing Receipt, in due course.**

**New International Application Filed with the USPTO as a Receiving Office**

**If a new international application is being filed and the international application includes the necessary components for an international filing date (see PCT Article 11 and MPEP 1810), a Notification of the International Application Number and of the International Filing Date (Form PCT/RO/105) will be issued in due course, subject to prescriptions concerning national security, and the date shown on this Acknowledgement Receipt will establish the international filing date of the application.**

UNITED STATES PATENT AND TRADEMARK OFFICE

UNITED STATES DEPARTMENT OF COMMERCE
United States Patent and Trademark Office
Address: COMMISSIONER FOR PATENTS
P.O. Box 1450
Alexandria, Virginia 22313-1450
www.uspto.gov

| APPLICATION NUMBER | FILING OR 371(C) DATE | FIRST NAMED APPLICANT | ATTY. DOCKET NO./TITLE |
|---|---|---|---|
| 15/096,686 | 04/12/2016 | Jongju Na | NA001KR_US2 |

**CONFIRMATION NO. 2620**

**POA ACCEPTANCE LETTER**

26338
MERLE W. RICHMAN, III
P.O. BOX 3333
LA JOLLA, CA 92038

*OC000000090912396*

Date Mailed: 04/26/2017

## NOTICE OF ACCEPTANCE OF POWER OF ATTORNEY

This is in response to the Power of Attorney filed 04/24/2017.

The Power of Attorney in this application is accepted. Correspondence in this application will be mailed to the above address as provided by 37 CFR 1.33.

Questions about the contents of this notice and the requirements it sets forth should be directed to the Office of Data Management, Application Assistance Unit, at **(571) 272-4000** or **(571) 272-4200** or **1-888-786-0101**.

/qnguyen/

| | |
|---|---|
| **Doc Code: DIST.E.FILE**<br>**Document Description: Electronic Terminal Disclaimer - Filed** | PTO/SB/26<br>U.S. Patent and Trademark Office<br>Department of Commerce |

| | |
|---|---|
| Electronic Petition Request | **TERMINAL DISCLAIMER TO OBVIATE A DOUBLE PATENTING REJECTION OVER A "PRIOR" PATENT** |
| Application Number | 15096686 |
| Filing Date | 12-Apr-2016 |
| First Named Inventor | Jongju Na |
| Attorney Docket Number | NA001KR_US2 |
| Title of Invention | Method, system, and apparatus for dermatological treatment |

☒ Filing of terminal disclaimer does not obviate requirement for response under 37 CFR 1.111 to outstanding Office Action

☒ This electronic Terminal Disclaimer is not being used for a Joint Research Agreement.

| Owner | Percent Interest |
|---|---|
| Mr. Jongji Na | 100% |

The owner(s) with percent interest listed above in the instant application hereby disclaims, except as provided below, the terminal part of the statutory term of any patent granted on the instant application which would extend beyond the expiration date of the full statutory term of prior patent number(s)

9320536

as the term of said prior patent is presently shortened by any terminal disclaimer. The owner hereby agrees that any patent so granted on the instant application shall be enforceable only for and during such period that it and the prior patent are commonly owned. This agreement runs with any patent granted on the instant application and is binding upon the grantee, its successors or assigns.

In making the above disclaimer, the owner does not disclaim the terminal part of the term of any patent granted on the instant application that would extend to the expiration date of the full statutory term of the prior patent, "as the term of said prior patent is presently shortened by any terminal disclaimer," in the event that said prior patent later:
- expires for failure to pay a maintenance fee;
- is held unenforceable;
- is found invalid by a court of competent jurisdiction;
- is statutorily disclaimed in whole or terminally disclaimed under 37 CFR 1.321;
- has all claims canceled by a reexamination certificate;
- is reissued; or
- is in any manner terminated prior to the expiration of its full statutory term as presently shortened by any terminal disclaimer.

◯ Terminal disclaimer fee under 37 CFR 1.20(d) is included with Electronic Terminal Disclaimer request.

| | |
|---|---|
| ◉ | I certify, in accordance with 37 CFR 1.4(d)(4), that the terminal disclaimer fee under 37 CFR 1.20(d) required for this terminal disclaimer has already been paid in the above-identified application. |

THIS PORTION MUST BE COMPLETED BY THE SIGNATORY OR SIGNATORIES

I certify, in accordance with 37 CFR 1.4(d)(4) that I am:

◉ An attorney or agent registered to practice before the Patent and Trademark Office who is of record in this application

Registration Number 38282

◯ A sole inventor

◯ A joint inventor; I certify that I am authorized to sign this submission on behalf of all of the inventors as evidenced by the power of attorney in the application

◯ A joint inventor; all of whom are signing this request

| | |
|---|---|
| Signature | /mwresq/ |
| Name | Merle Richman |

*Statement under 37 CFR 3.73(b) is required if terminal disclaimer is signed by the assignee (owner).
Form PTO/SB/96 may be used for making this certification. See MPEP § 324.

Doc Code: DISQ.E.FILE
Document Description: Electronic Terminal Disclaimer – Approved

Application No.: 15096686

Filing Date: 12-Apr-2016

Applicant/Patent under Reexamination: Na

Electronic Terminal Disclaimer filed on April 28, 2017

☒ APPROVED

**This patent is subject to a terminal disclaimer**

☐ DISAPPROVED

Approved/Disapproved by: Electronic Terminal Disclaimer automatically approved by EFS-Web

U.S. Patent and Trademark Office

# Electronic Acknowledgement Receipt

| | |
|---|---|
| **EFS ID:** | 29065071 |
| **Application Number:** | 15096686 |
| **International Application Number:** | |
| **Confirmation Number:** | 2620 |
| **Title of Invention:** | Method, system, and apparatus for dermatological treatment |
| **First Named Inventor/Applicant Name:** | Jongju Na |
| **Customer Number:** | 26338 |
| **Filer:** | Merle W. Richman |
| **Filer Authorized By:** | |
| **Attorney Docket Number:** | NA001KR_US2 |
| **Receipt Date:** | 28-APR-2017 |
| **Filing Date:** | 12-APR-2016 |
| **Time Stamp:** | 15:35:02 |
| **Application Type:** | Utility under 35 USC 111(a) |

## Payment information:

| | |
|---|---|
| Submitted with Payment | no |

## File Listing:

| Document Number | Document Description | File Name | File Size(Bytes)/ Message Digest | Multi Part /.zip | Pages (if appl.) |
|---|---|---|---|---|---|
| 1 | Electronic Terminal Disclaimer-Filed | eTerminal-Disclaimer.pdf | 31973<br>9df22b7bae4274b38ac327bfdfc914fb03356d0e | no | 2 |

**Warnings:**

| Information: | |
|---|---|
| Total Files Size (in bytes): | 31973 |

**This Acknowledgement Receipt evidences receipt on the noted date by the USPTO of the indicated documents, characterized by the applicant, and including page counts, where applicable. It serves as evidence of receipt similar to a Post Card, as described in MPEP 503.**

**New Applications Under 35 U.S.C. 111**

**If a new application is being filed and the application includes the necessary components for a filing date (see 37 CFR 1.53(b)-(d) and MPEP 506), a Filing Receipt (37 CFR 1.54) will be issued in due course and the date shown on this Acknowledgement Receipt will establish the filing date of the application.**

**National Stage of an International Application under 35 U.S.C. 371**

**If a timely submission to enter the national stage of an international application is compliant with the conditions of 35 U.S.C. 371 and other applicable requirements a Form PCT/DO/EO/903 indicating acceptance of the application as a national stage submission under 35 U.S.C. 371 will be issued in addition to the Filing Receipt, in due course.**

**New International Application Filed with the USPTO as a Receiving Office**

**If a new international application is being filed and the international application includes the necessary components for an international filing date (see PCT Article 11 and MPEP 1810), a Notification of the International Application Number and of the International Filing Date (Form PCT/RO/105) will be issued in due course, subject to prescriptions concerning national security, and the date shown on this Acknowledgement Receipt will establish the international filing date of the application.**

**IN THE UNITED STATES PATENT AND TRADEMARK OFFICE**

| | |
|---|---|
| Applicant(s): Na<br><br>Application No.: 15096686<br><br>Filed: 4/12/2016<br><br>Title: METHOD, SYSTEM, AND APPARATUS FOR DERMATOLOGICAL TREATMENT<br><br>Attorney Docket No.: NA001KR_US2 | Art Unit: 3733<br><br>Examiner: David Comstock |

Commissioner for Patents
P.O. Box 1450
Alexandria, VA 22313-1450

RESPONSE AFTER FINAL

Dear Sir:

A Final office action was mailed on April 6, 2017 with a shortened statutory response time of 3 months. Filing of this response is thus timely and Applicant respectfully requests its entry as it requires no new search or reconsideration other than addressing a terminal disclaimer disapproval that now has been approved.

Claim listing begins on page 2.

Remarks begin on page 6.

In the claims:

1. (Cancelled).
2. (Cancelled).
3. (Cancelled).
4. (Cancelled).
5. (Cancelled).
6. (Cancelled).
7. (Cancelled).
8. (Cancelled).
9. (Cancelled).
10. (Cancelled).
11. (Cancelled).
12. (Cancelled).
13. (Cancelled).
14. (Cancelled).
15. (Cancelled).
16. (Cancelled).
17. (Cancelled).
18. (Cancelled).
19. (Cancelled).
20. (Cancelled).

21. (Previously Presented) A method of treating dermatological tissue, comprising:

placing a device surface on or near dermatological tissue to be treated, the surface including a plurality of needles one of extending or extendable a desired distance from the surface; and

directing a signal generator electrically coupled to the plurality of extended needles to produce pulsed radio frequency signals across the plurality of needles to affect dermatological tissue near the plurality of needles.

22. (Previously Presented) The method of treating dermatological tissue of claim 21, including placing a device end surface on or near dermatological tissue to be treated, the end surface including a plurality of needles extendable a desired distance from the end surface.

23. (Previously Presented) The method of treating dermatological tissue of claim 22, further including causing the plurality of the extendable needles to extend a desired distance from the end surface.

24. (Previously Presented) The method of treating dermatological tissue of claim 22, further including energizing a motor coupled to the plurality of extendable needles to cause the plurality of the extendable needles to extend a desired distance from the end surface.

25. (Previously Presented) The method of treating dermatological tissue of claim 21, including placing a device inner surface on or near dermatological tissue to be treated, the inner surface including a plurality of needles extending a desired distance from the inner surface.

26. (Previously Presented) The method of treating dermatological tissue of claim 21, including placing a device inner surface on or near dermatological tissue to be treated, the inner surface including a plurality of needles extending a desired distance from the inner surface with a force sufficient to cause the plurality of needles to penetrate the dermatological tissue.

27. (Previously Presented) The method of treating dermatological tissue of claim 21, including directing a signal generator electrically coupled to the plurality of needles to produce pulsed radio frequency signals across the plurality of needles to form a bipolar pair.

28. (Previously Presented) The method of treating dermatological tissue of claim 21, including directing a signal generator electrically coupled to the plurality of needles to produce pulsed radio frequency signals across the plurality of needles, the plurality of needles to form a bipolar pair and affect dermatological tissue near the bipolar pair.

29. (Previously Presented) The method of treating dermatological tissue of claim 21, including directing the signal generator to produce periodic pulsed radio frequency signals across the plurality of needles for a predetermined time interval, each pulse having a width.

30. (Previously Presented) The method of treating dermatological tissue of claim 27, wherein the predetermined time interval is about 100ms to 500ms and the pulse width is about 100 microseconds to 500 microseconds.

31. (Previously Presented) An apparatus for treating dermatological tissue, comprising:

a device including a plurality of needles one of extending or extendable a desired distance from a surface, the desired distance selected to enable the plurality of needles to penetrate dermatological tissue; and

a signal generator electrically coupled to the plurality of extended needles to produce pulsed radio frequency signals across the plurality of needles to affect dermatological tissue near the plurality of needles.

32. (Previously Presented) The apparatus for treating dermatological tissue of claim 31, wherein the device includes an end surface configured to be placed on or near dermatological tissue to be treated, the end surface including a plurality of needles extendable a desired distance from the end surface.

33. (Previously Presented) The apparatus for treating dermatological tissue of claim 32, further including a mechanism for causing the plurality of the extendable needles to extend a desired distance from the end surface.

34. (Previously Presented) The apparatus for treating dermatological tissue of claim 32, further including a motor coupled to the plurality of extendable needles that may be directed to cause the plurality of the extendable needles to extend a desired distance from the end surface.

35. (Previously Presented) The apparatus for treating dermatological tissue of claim 31, wherein the device includes an inner surface including a plurality of needles extending a desired distance from the inner surface.

36. (Previously Presented) The apparatus for treating dermatological tissue of claim 31, wherein the signal generator produces pulsed radio frequency signals across the plurality of needles to form a bipolar pair.

37. (Previously Presented) The apparatus for treating dermatological tissue of claim 31, wherein the signal generator produces pulsed radio frequency signals across the plurality of needles to form a bipolar pair and affect dermatological tissue near the bipolar pair.

38. (Previously Presented) The apparatus for treating dermatological tissue of claim 31, wherein the signal generator produces periodic pulsed radio frequency signals across the plurality of needles for a predetermined time interval, each pulse having a width.

39. (Previously Presented) The apparatus for treating dermatological tissue of claim 38, wherein the predetermined time interval is about 100ms to 500ms.

40. (Previously Presented) The apparatus for treating dermatological tissue of claim 38, wherein the pulse width is about 100 microseconds to 500 microseconds.

## REMARKS

Status of claims:

Claims pending: 21-40

Claims added: *None*

Claims amended: *None*

Claims cancelled: *None*

Claims after entry: 21-40.

The Examiner has rejected Claims 21-40 on the ground of nonstatutory double patenting as being unpatentable over claims 1-20 of U.S. Patent No. 9,320,536. Applicant had filed a terminal disclaimer via www.uspto.gov on December 16, 2016 to disclaim 9,320,536 and overcome the present rejection. The terminal disclaimer was disapproved due to failure to list the applicant's full name "Mr. Jongu Na" on the terminal disclaimer. Applicant filed a new terminal disclaimer today 4/28/2017 via eprocessing disclaiming 9,320,536, which was approved. Reconsideration is respectfully requested.

Applicant respectfully requests entry of this response as no claims have been amended, no new matter has been introduced, and the case was otherwise allowable but for the terminal disclaimer issue.

Applicant has made a diligent effort to place the claims in condition for allowance. However, should there remain unresolved issues that require adverse action, it is respectfully requested that the Examiner telephone Merle Richman, Applicants' Attorney at 858 320-2030 so that such issues may be resolved as expeditiously as possible.

Respectfully Submitted,

04/28/2017__ /mwresq/_____
Date Merle Richman
Attorney/Agent for Applicant(s)
Reg. No. 38282

Merle Richman
Patent Attorney
Customer ID - 26338
PO Box 3333
La Jolla, CA 92038-3333
Tel. 858 320-2030

Doc Code: TRAN.LET
Document Description: Transmittal Letter

PTO/SB/21 (07-09)
Approved for use through 07/31/2012. OMB 0651-0031
U.S. Patent and Trademark Office; U.S. DEPARTMENT OF COMMERCE
Under the Paper Reduction Act of 1995, no persons are required to respond to a collection of information unless it displays a valid OMB control number.

| **TRANSMITTAL FORM** *(to be used for all correspondence after initial filing)* | | Application Number | 15096686 |
|---|---|---|---|
| | | Filing Date | Apr 12, 2016 |
| | | First Named Inventor | Na, Jongju |
| | | Art Unit | 3733 |
| | | Examiner Name | David Comstock |
| Total Number of Pages in This Submission | | Attorney Docket Number | NA001KR_US2 |

## ENCLOSURES *(Check all that apply)*

- [ ] Fee Transmittal Form
  - [ ] Fee Attached
- [X] Amendment / Reply – 7 pages
  - [X] After Final
  - [ ] Affidavits/declaration(s)
- [ ] Extension of Time Request
- [ ] Express Abandonment Request
- [ ] Information Disclosure Statement
- [ ] Certified Copy of Priority Document(s)
- [ ] Reply to Missing Parts/ Incomplete Application
  - [ ] Reply to Missing Parts under 37 CFR 1.52 or 1.53
- [ ] Drawing(s)
- [ ] Licensing-related Papers
- [ ] Petition
- [ ] Petition to Convert to a Provisional Application
- [ ] Power of Attorney, Revocation Change of Correspondence Address
- [X] Terminal Disclaimer
- [ ] Request for Refund
- [ ] CD, Number of CD(s) _____
  - [ ] Landscape Table on CD
- [ ] After Allowance Communication to TC
- [ ] Appeal Communication to Board of Appeals and Interferences
- [ ] Appeal Communication to TC **(Appeal Notice, Brief, Reply Brief)**
- [ ] Proprietary Information
- [ ] Status Letter
- [ ] Other Enclosure(s) (please identify below):

Remarks

## SIGNATURE OF APPLICANT, ATTORNEY, OR AGENT

| Firm Name | Merle W. Richman, Cust ID - 26338 | | |
|---|---|---|---|
| Signature | /mwresq/ | | |
| Printed name | Merle Richman | | |
| Date | April 28, 2017 | Reg. No. | 38282 |

## CERTIFICATE OF TRANSMISSION/MAILING

I hereby certify that this correspondence is being electronically transmitted to the USPTO or deposited with the United States Postal Service with sufficient postage as first class mail in an envelope addressed to: Commissioner for Patents, P.O. Box 1450, Alexandria, VA 22313-1450 on the date shown below.

| Signature | /mwresq/ | | |
|---|---|---|---|
| Typed or printed name | Merle Richman | Date | April 28, 2017 |

This collection of information is required by 37 CFR 1.5. The information is required to obtain or retain a benefit by the public which is to file (and by the USPTO to process) an application. Confidentiality is governed by 35 U.S.C. 122 and 37 CFR 1.11 and 1.14. This collection is estimated to take 2 hours to complete, including gathering, preparing, and submitting the completed application form to the USPTO. Time will vary depending upon the individual case. Any comments on the amount of time you require to complete this form and/or suggestions for reducing this burden, should be sent to the Chief Information Officer, U.S. Patent and Trademark Office, U.S. Department of Commerce, P.O. Box 1450, Alexandria, VA 22313-1450. DO NOT SEND FEES OR COMPLETED FORMS TO THIS ADDRESS. **SEND TO: Commissioner for Patents, P.O. Box 1450, Alexandria, VA 22313-1450.**

*In you need assistance in completing the form, call 1-800-PTO-9199 and select option 2.*

# Electronic Acknowledgement Receipt

| | |
|---|---|
| **EFS ID:** | 29066135 |
| **Application Number:** | 15096686 |
| **International Application Number:** | |
| **Confirmation Number:** | 2620 |
| **Title of Invention:** | Method, system, and apparatus for dermatological treatment |
| **First Named Inventor/Applicant Name:** | Jongju Na |
| **Customer Number:** | 26338 |
| **Filer:** | Merle W. Richman |
| **Filer Authorized By:** | |
| **Attorney Docket Number:** | NA001KR_US2 |
| **Receipt Date:** | 28-APR-2017 |
| **Filing Date:** | 12-APR-2016 |
| **Time Stamp:** | 16:13:03 |
| **Application Type:** | Utility under 35 USC 111(a) |

## Payment information:

| | |
|---|---|
| Submitted with Payment | no |

## File Listing:

| Document Number | Document Description | File Name | File Size(Bytes)/ Message Digest | Multi Part /.zip | Pages (if appl.) |
|---|---|---|---|---|---|
| 1 | Response After Final Action | NA001KR_US2-RFOA-2017-04-06.pdf | 114382<br>ef029afaa9aeeaa79b4be67fd309c52d161c5859 | no | 7 |

**Warnings:**

| Information: | | | | | |
|---|---|---|---|---|---|
| 2 | Transmittal Letter | NA001KR_US2-TRFOA-2017-04-06.pdf | 111488<br>05308f8551787e714e8171b52bcb95a31253ceac | no | 1 |
| Warnings: | | | | | |
| Information: | | | | | |
| | | | Total Files Size (in bytes): | 225870 | |

**This Acknowledgement Receipt evidences receipt on the noted date by the USPTO of the indicated documents, characterized by the applicant, and including page counts, where applicable. It serves as evidence of receipt similar to a Post Card, as described in MPEP 503.**

**New Applications Under 35 U.S.C. 111**

**If a new application is being filed and the application includes the necessary components for a filing date (see 37 CFR 1.53(b)-(d) and MPEP 506), a Filing Receipt (37 CFR 1.54) will be issued in due course and the date shown on this Acknowledgement Receipt will establish the filing date of the application.**

**National Stage of an International Application under 35 U.S.C. 371**

**If a timely submission to enter the national stage of an international application is compliant with the conditions of 35 U.S.C. 371 and other applicable requirements a Form PCT/DO/EO/903 indicating acceptance of the application as a national stage submission under 35 U.S.C. 371 will be issued in addition to the Filing Receipt, in due course.**

**New International Application Filed with the USPTO as a Receiving Office**

**If a new international application is being filed and the international application includes the necessary components for an international filing date (see PCT Article 11 and MPEP 1810), a Notification of the International Application Number and of the International Filing Date (Form PCT/RO/105) will be issued in due course, subject to prescriptions concerning national security, and the date shown on this Acknowledgement Receipt will establish the international filing date of the application.**

PTO/SB/06 (09-11)
Approved for use through 1/31/2014. OMB 0651-0032
U.S. Patent and Trademark Office; U.S. DEPARTMENT OF COMMERCE
Under the Paperwork Reduction Act of 1995, no persons are required to respond to a collection of information unless it displays a valid OMB control number.

# PATENT APPLICATION FEE DETERMINATION RECORD

Substitute for Form PTO-875

| Application or Docket Number | Filing Date | ☐ To be Mailed |
|---|---|---|
| 15/096,686 | 04/12/2016 | |

**ENTITY**: ☐ LARGE ☒ SMALL ☐ MICRO

## APPLICATION AS FILED – PART I

| FOR | (Column 1) NUMBER FILED | (Column 2) NUMBER EXTRA | RATE ($) | FEE ($) |
|---|---|---|---|---|
| ☐ BASIC FEE (37 CFR 1.16(a), (b), or (c)) | N/A | N/A | N/A | |
| ☐ SEARCH FEE (37 CFR 1.16(k), (i), or (m)) | N/A | N/A | N/A | |
| ☐ EXAMINATION FEE (37 CFR 1.16(o), (p), or (q)) | N/A | N/A | N/A | |
| TOTAL CLAIMS (37 CFR 1.16(i)) | minus 20 = | * | X $ = | |
| INDEPENDENT CLAIMS (37 CFR 1.16(h)) | minus 3 = | * | X $ = | |
| ☐ APPLICATION SIZE FEE (37 CFR 1.16(s)) | If the specification and drawings exceed 100 sheets of paper, the application size fee due is $310 ($155 for small entity) for each additional 50 sheets or fraction thereof. See 35 U.S.C. 41(a)(1)(G) and 37 CFR 1.16(s). | | | |
| ☐ MULTIPLE DEPENDENT CLAIM PRESENT (37 CFR 1.16(j)) | | | | |
| * If the difference in column 1 is less than zero, enter "0" in column 2. | | | TOTAL | |

## APPLICATION AS AMENDED – PART II

AMENDMENT **04/28/2017**

| | (Column 1) CLAIMS REMAINING AFTER AMENDMENT | | (Column 2) HIGHEST NUMBER PREVIOUSLY PAID FOR | (Column 3) PRESENT EXTRA | RATE ($) | ADDITIONAL FEE ($) |
|---|---|---|---|---|---|---|
| Total (37 CFR 1.16(i)) | * 20 | Minus | ** 20 | = 0 | X $40 = | 0 |
| Independent (37 CFR 1.16(h)) | * 2 | Minus | ***3 | = 0 | X $210 = | 0 |
| ☐ Application Size Fee (37 CFR 1.16(s)) | | | | | | |
| ☐ FIRST PRESENTATION OF MULTIPLE DEPENDENT CLAIM (37 CFR 1.16(j)) | | | | | | |
| | | | | | TOTAL ADD'L FEE | 0 |

AMENDMENT

| | (Column 1) CLAIMS REMAINING AFTER AMENDMENT | | (Column 2) HIGHEST NUMBER PREVIOUSLY PAID FOR | (Column 3) PRESENT EXTRA | RATE ($) | ADDITIONAL FEE ($) |
|---|---|---|---|---|---|---|
| Total (37 CFR 1.16(i)) | * | Minus | ** | = | X $ = | |
| Independent (37 CFR 1.16(h)) | * | Minus | *** | = | X $ = | |
| ☐ Application Size Fee (37 CFR 1.16(s)) | | | | | | |
| ☐ FIRST PRESENTATION OF MULTIPLE DEPENDENT CLAIM (37 CFR 1.16(j)) | | | | | | |
| | | | | | TOTAL ADD'L FEE | |

* If the entry in column 1 is less than the entry in column 2, write "0" in column 3.

** If the "Highest Number Previously Paid For" IN THIS SPACE is less than 20, enter "20".

*** If the "Highest Number Previously Paid For" IN THIS SPACE is less than 3, enter "3".

The "Highest Number Previously Paid For" (Total or Independent) is the highest number found in the appropriate box in column 1.

LIE
DAWN BREWER

This collection of information is required by 37 CFR 1.16. The information is required to obtain or retain a benefit by the public which is to file (and by the USPTO to process) an application. Confidentiality is governed by 35 U.S.C. 122 and 37 CFR 1.14. This collection is estimated to take 12 minutes to complete, including gathering, preparing, and submitting the completed application form to the USPTO. Time will vary depending upon the individual case. Any comments on the amount of time you require to complete this form and/or suggestions for reducing this burden, should be sent to the Chief Information Officer, U.S. Patent and Trademark Office, U.S. Department of Commerce, P.O. Box 1450, Alexandria, VA 22313-1450. DO NOT SEND FEES OR COMPLETED FORMS TO THIS ADDRESS. **SEND TO: Commissioner for Patents, P.O. Box 1450, Alexandria, VA 22313-1450.**

*If you need assistance in completing the form, call 1-800-PTO-9199 and select option 2.*

UNITED STATES PATENT AND TRADEMARK OFFICE

UNITED STATES DEPARTMENT OF COMMERCE
United States Patent and Trademark Office
Address: COMMISSIONER FOR PATENTS
P.O. Box 1450
Alexandria, Virginia 22313-1450
www.uspto.gov

# NOTICE OF ALLOWANCE AND FEE(S) DUE

26338 7590 05/19/2017

MERLE W. RICHMAN, III
P.O. BOX 3333
LA JOLLA, CA 92038

| EXAMINER |
|---|
| COMSTOCK, DAVID C |

| ART UNIT | PAPER NUMBER |
|---|---|
| 3733 | |

DATE MAILED: 05/19/2017

| APPLICATION NO. | FILING DATE | FIRST NAMED INVENTOR | ATTORNEY DOCKET NO. | CONFIRMATION NO. |
|---|---|---|---|---|
| 15/096,686 | 04/12/2016 | Jongju Na | NA001KR_US2 | 2620 |

TITLE OF INVENTION: METHOD, SYSTEM, AND APPARATUS FOR DERMATOLOGICAL TREATMENT

| APPLN. TYPE | ENTITY STATUS | ISSUE FEE DUE | PUBLICATION FEE DUE | PREV. PAID ISSUE FEE | TOTAL FEE(S) DUE | DATE DUE |
|---|---|---|---|---|---|---|
| nonprovisional | SMALL | $480 | $0 | $0 | $480 | 08/21/2017 |

**THE APPLICATION IDENTIFIED ABOVE HAS BEEN EXAMINED AND IS ALLOWED FOR ISSUANCE AS A PATENT. PROSECUTION ON THE MERITS IS CLOSED. THIS NOTICE OF ALLOWANCE IS NOT A GRANT OF PATENT RIGHTS. THIS APPLICATION IS SUBJECT TO WITHDRAWAL FROM ISSUE AT THE INITIATIVE OF THE OFFICE OR UPON PETITION BY THE APPLICANT. SEE 37 CFR 1.313 AND MPEP 1308.**

**THE ISSUE FEE AND PUBLICATION FEE (IF REQUIRED) MUST BE PAID WITHIN THREE MONTHS FROM THE MAILING DATE OF THIS NOTICE OR THIS APPLICATION SHALL BE REGARDED AS ABANDONED. THIS STATUTORY PERIOD CANNOT BE EXTENDED. SEE 35 U.S.C. 151. THE ISSUE FEE DUE INDICATED ABOVE DOES NOT REFLECT A CREDIT FOR ANY PREVIOUSLY PAID ISSUE FEE IN THIS APPLICATION. IF AN ISSUE FEE HAS PREVIOUSLY BEEN PAID IN THIS APPLICATION (AS SHOWN ABOVE), THE RETURN OF PART B OF THIS FORM WILL BE CONSIDERED A REQUEST TO REAPPLY THE PREVIOUSLY PAID ISSUE FEE TOWARD THE ISSUE FEE NOW DUE.**

**HOW TO REPLY TO THIS NOTICE:**

I. Review the ENTITY STATUS shown above. If the ENTITY STATUS is shown as SMALL or MICRO, verify whether entitlement to that entity status still applies.

If the ENTITY STATUS is the same as shown above, pay the TOTAL FEE(S) DUE shown above.

If the ENTITY STATUS is changed from that shown above, on PART B - FEE(S) TRANSMITTAL, complete section number 5 titled "Change in Entity Status (from status indicated above)".

For purposes of this notice, small entity fees are 1/2 the amount of undiscounted fees, and micro entity fees are 1/2 the amount of small entity fees.

II. PART B - FEE(S) TRANSMITTAL, or its equivalent, must be completed and returned to the United States Patent and Trademark Office (USPTO) with your ISSUE FEE and PUBLICATION FEE (if required). If you are charging the fee(s) to your deposit account, section "4b" of Part B - Fee(s) Transmittal should be completed and an extra copy of the form should be submitted. If an equivalent of Part B is filed, a request to reapply a previously paid issue fee must be clearly made, and delays in processing may occur due to the difficulty in recognizing the paper as an equivalent of Part B.

III. All communications regarding this application must give the application number. Please direct all communications prior to issuance to Mail Stop ISSUE FEE unless advised to the contrary.

**IMPORTANT REMINDER: Utility patents issuing on applications filed on or after Dec. 12, 1980 may require payment of maintenance fees. It is patentee's responsibility to ensure timely payment of maintenance fees when due.**

# PART B - FEE(S) TRANSMITTAL

**Complete and send this form, together with applicable fee(s), to: Mail** **Mail Stop ISSUE FEE**
**Commissioner for Patents**
**P.O. Box 1450**
**Alexandria, Virginia 22313-1450**
**or Fax (571)-273-2885**

INSTRUCTIONS: This form should be used for transmitting the ISSUE FEE and PUBLICATION FEE (if required). Blocks 1 through 5 should be completed where appropriate. All further correspondence including the Patent, advance orders and notification of maintenance fees will be mailed to the current correspondence address as indicated unless corrected below or directed otherwise in Block 1, by (a) specifying a new correspondence address; and/or (b) indicating a separate "FEE ADDRESS" for maintenance fee notifications.

CURRENT CORRESPONDENCE ADDRESS (Note: Use Block 1 for any change of address)

26338 7590 05/19/2017
MERLE W. RICHMAN, III
P.O. BOX 3333
LA JOLLA, CA 92038

Note: A certificate of mailing can only be used for domestic mailings of the Fee(s) Transmittal. This certificate cannot be used for any other accompanying papers. Each additional paper, such as an assignment or formal drawing, must have its own certificate of mailing or transmission.

**Certificate of Mailing or Transmission**
I hereby certify that this Fee(s) Transmittal is being deposited with the United States Postal Service with sufficient postage for first class mail in an envelope addressed to the Mail Stop ISSUE FEE address above, or being facsimile transmitted to the USPTO (571) 273-2885, on the date indicated below.

| |
|---|
| (Depositor's name) |
| (Signature) |
| (Date) |

| APPLICATION NO. | FILING DATE | FIRST NAMED INVENTOR | ATTORNEY DOCKET NO. | CONFIRMATION NO. |
|---|---|---|---|---|
| 15/096,686 | 04/12/2016 | Jongju Na | NA001KR_US2 | 2620 |

TITLE OF INVENTION: METHOD, SYSTEM, AND APPARATUS FOR DERMATOLOGICAL TREATMENT

| APPLN. TYPE | ENTITY STATUS | ISSUE FEE DUE | PUBLICATION FEE DUE | PREV. PAID ISSUE FEE | TOTAL FEE(S) DUE | DATE DUE |
|---|---|---|---|---|---|---|
| nonprovisional | SMALL | $480 | $0 | $0 | $480 | 08/21/2017 |

| EXAMINER | ART UNIT | CLASS-SUBCLASS |
|---|---|---|
| COMSTOCK, DAVID C | 3733 | 600-249000 |

1. Change of correspondence address or indication of "Fee Address" (37 CFR 1.363).
- ❑ Change of correspondence address (or Change of Correspondence Address form PTO/SB/122) attached.
- ❑ "Fee Address" indication (or "Fee Address" Indication form PTO/SB/47; Rev 03-02 or more recent) attached. **Use of a Customer Number is required.**

2. For printing on the patent front page, list
(1) The names of up to 3 registered patent attorneys or agents OR, alternatively,
(2) The name of a single firm (having as a member a registered attorney or agent) and the names of up to 2 registered patent attorneys or agents. If no name is listed, no name will be printed.
1 _____
2 _____
3 _____

3. ASSIGNEE NAME AND RESIDENCE DATA TO BE PRINTED ON THE PATENT (print or type)

PLEASE NOTE: Unless an assignee is identified below, no assignee data will appear on the patent. If an assignee is identified below, the document has been filed for recordation as set forth in 37 CFR 3.11. Completion of this form is NOT a substitute for filing an assignment.

(A) NAME OF ASSIGNEE (B) RESIDENCE: (CITY and STATE OR COUNTRY)

Please check the appropriate assignee category or categories (will not be printed on the patent) : ❑ Individual ❑ Corporation or other private group entity ❑ Government

4a. The following fee(s) are submitted:
- ❑ Issue Fee
- ❑ Publication Fee (No small entity discount permitted)
- ❑ Advance Order - # of Copies _____

4b. Payment of Fee(s): **(Please first reapply any previously paid issue fee shown above)**
- ❑ A check is enclosed.
- ❑ Payment by credit card. Form PTO-2038 is attached.
- ❑ The director is hereby authorized to charge the required fee(s), any deficiency, or credits any overpayment, to Deposit Account Number _____ (enclose an extra copy of this form).

5. **Change in Entity Status** (from status indicated above)
- ❑ Applicant certifying micro entity status. See 37 CFR 1.29
  NOTE: Absent a valid certification of Micro Entity Status (see forms PTO/SB/15A and 15B), issue fee payment in the micro entity amount will not be accepted at the risk of application abandonment.
- ❑ Applicant asserting small entity status. See 37 CFR 1.27
  NOTE: If the application was previously under micro entity status, checking this box will be taken to be a notification of loss of entitlement to micro entity status.
- ❑ Applicant changing to regular undiscounted fee status.
  NOTE: Checking this box will be taken to be a notification of loss of entitlement to small or micro entity status, as applicable.

NOTE: This form must be signed in accordance with 37 CFR 1.31 and 1.33. See 37 CFR 1.4 for signature requirements and certifications.

Authorized Signature _____ Date _____

Typed or printed name _____ Registration No. _____



PTOL-85 Part B (10-13) Approved for use through 10/31/2013. OMB 0651-0033 U.S. Patent and Trademark Office; U.S. DEPARTMENT OF COMMERCE

UNITED STATES PATENT AND TRADEMARK OFFICE

UNITED STATES DEPARTMENT OF COMMERCE
United States Patent and Trademark Office
Address: COMMISSIONER FOR PATENTS
P.O. Box 1450
Alexandria, Virginia 22313-1450
www.uspto.gov

| APPLICATION NO. | FILING DATE | FIRST NAMED INVENTOR | ATTORNEY DOCKET NO. | CONFIRMATION NO. |
|---|---|---|---|---|
| 15/096,686 | 04/12/2016 | Jongju Na | NA001KR_US2 | 2620 |

26338 7590 05/19/2017

MERLE W. RICHMAN, III
P.O. BOX 3333
LA JOLLA, CA 92038

| EXAMINER | |
|---|---|
| COMSTOCK, DAVID C | |
| **ART UNIT** | **PAPER NUMBER** |
| 3733 | |

DATE MAILED: 05/19/2017

**Determination of Patent Term Adjustment under 35 U.S.C. 154 (b)**
(Applications filed on or after May 29, 2000)

The Office has discontinued providing a Patent Term Adjustment (PTA) calculation with the Notice of Allowance.

Section 1(h)(2) of the AIA Technical Corrections Act amended 35 U.S.C. 154(b)(3)(B)(i) to eliminate the requirement that the Office provide a patent term adjustment determination with the notice of allowance. See Revisions to Patent Term Adjustment, 78 Fed. Reg. 19416, 19417 (Apr. 1, 2013). Therefore, the Office is no longer providing an initial patent term adjustment determination with the notice of allowance. The Office will continue to provide a patent term adjustment determination with the Issue Notification Letter that is mailed to applicant approximately three weeks prior to the issue date of the patent, and will include the patent term adjustment on the patent. Any request for reconsideration of the patent term adjustment determination (or reinstatement of patent term adjustment) should follow the process outlined in 37 CFR 1.705.

Any questions regarding the Patent Term Extension or Adjustment determination should be directed to the Office of Patent Legal Administration at (571)-272-7702. Questions relating to issue and publication fee payments should be directed to the Customer Service Center of the Office of Patent Publication at 1-(888)-786-0101 or (571)-272-4200.

## OMB Clearance and PRA Burden Statement for PTOL-85 Part B

The Paperwork Reduction Act (PRA) of 1995 requires Federal agencies to obtain Office of Management and Budget approval before requesting most types of information from the public. When OMB approves an agency request to collect information from the public, OMB (i) provides a valid OMB Control Number and expiration date for the agency to display on the instrument that will be used to collect the information and (ii) requires the agency to inform the public about the OMB Control Number's legal significance in accordance with 5 CFR 1320.5(b).

The information collected by PTOL-85 Part B is required by 37 CFR 1.311. The information is required to obtain or retain a benefit by the public which is to file (and by the USPTO to process) an application. Confidentiality is governed by 35 U.S.C. 122 and 37 CFR 1.14. This collection is estimated to take 12 minutes to complete, including gathering, preparing, and submitting the completed application form to the USPTO. Time will vary depending upon the individual case. Any comments on the amount of time you require to complete this form and/or suggestions for reducing this burden, should be sent to the Chief Information Officer, U.S. Patent and Trademark Office, U.S. Department of Commerce, P.O. Box 1450, Alexandria, Virginia 22313-1450. DO NOT SEND FEES OR COMPLETED FORMS TO THIS ADDRESS. SEND TO: Commissioner for Patents, P.O. Box 1450, Alexandria, Virginia 22313-1450. Under the Paperwork Reduction Act of 1995, no persons are required to respond to a collection of information unless it displays a valid OMB control number.

## Privacy Act Statement

**The Privacy Act of 1974 (P.L. 93-579)** requires that you be given certain information in connection with your submission of the attached form related to a patent application or patent. Accordingly, pursuant to the requirements of the Act, please be advised that: (1) the general authority for the collection of this information is 35 U.S.C. 2(b)(2); (2) furnishing of the information solicited is voluntary; and (3) the principal purpose for which the information is used by the U.S. Patent and Trademark Office is to process and/or examine your submission related to a patent application or patent. If you do not furnish the requested information, the U.S. Patent and Trademark Office may not be able to process and/or examine your submission, which may result in termination of proceedings or abandonment of the application or expiration of the patent.

The information provided by you in this form will be subject to the following routine uses:

1. The information on this form will be treated confidentially to the extent allowed under the Freedom of Information Act (5 U.S.C. 552) and the Privacy Act (5 U.S.C 552a). Records from this system of records may be disclosed to the Department of Justice to determine whether disclosure of these records is required by the Freedom of Information Act.
2. A record from this system of records may be disclosed, as a routine use, in the course of presenting evidence to a court, magistrate, or administrative tribunal, including disclosures to opposing counsel in the course of settlement negotiations.
3. A record in this system of records may be disclosed, as a routine use, to a Member of Congress submitting a request involving an individual, to whom the record pertains, when the individual has requested assistance from the Member with respect to the subject matter of the record.
4. A record in this system of records may be disclosed, as a routine use, to a contractor of the Agency having need for the information in order to perform a contract. Recipients of information shall be required to comply with the requirements of the Privacy Act of 1974, as amended, pursuant to 5 U.S.C. 552a(m).
5. A record related to an International Application filed under the Patent Cooperation Treaty in this system of records may be disclosed, as a routine use, to the International Bureau of the World Intellectual Property Organization, pursuant to the Patent Cooperation Treaty.
6. A record in this system of records may be disclosed, as a routine use, to another federal agency for purposes of National Security review (35 U.S.C. 181) and for review pursuant to the Atomic Energy Act (42 U.S.C. 218(c)).
7. A record from this system of records may be disclosed, as a routine use, to the Administrator, General Services, or his/her designee, during an inspection of records conducted by GSA as part of that agency's responsibility to recommend improvements in records management practices and programs, under authority of 44 U.S.C. 2904 and 2906. Such disclosure shall be made in accordance with the GSA regulations governing inspection of records for this purpose, and any other relevant (i.e., GSA or Commerce) directive. Such disclosure shall not be used to make determinations about individuals.
8. A record from this system of records may be disclosed, as a routine use, to the public after either publication of the application pursuant to 35 U.S.C. 122(b) or issuance of a patent pursuant to 35 U.S.C. 151. Further, a record may be disclosed, subject to the limitations of 37 CFR 1.14, as a routine use, to the public if the record was filed in an application which became abandoned or in which the proceedings were terminated and which application is referenced by either a published application, an application open to public inspection or an issued patent.
9. A record from this system of records may be disclosed, as a routine use, to a Federal, State, or local law enforcement agency, if the USPTO becomes aware of a violation or potential violation of law or regulation.

| Notice of Allowability | Application No. 15/096,686 | Applicant(s) NA, JONGJU | |
|---|---|---|---|
| | Examiner DAVID C. COMSTOCK | Art Unit 3733 | AIA (First Inventor to File) Status Yes |

***-- The MAILING DATE of this communication appears on the cover sheet with the correspondence address--***

All claims being allowable, PROSECUTION ON THE MERITS IS (OR REMAINS) CLOSED in this application. If not included herewith (or previously mailed), a Notice of Allowance (PTOL-85) or other appropriate communication will be mailed in due course. **THIS NOTICE OF ALLOWABILITY IS NOT A GRANT OF PATENT RIGHTS.** This application is subject to withdrawal from issue at the initiative of the Office or upon petition by the applicant. See 37 CFR 1.313 and MPEP 1308.

1. ☒ This communication is responsive to *terminal disclaimer and amendment filed 28 April 2017*.
   ☐ A declaration(s)/affidavit(s) under **37 CFR 1.130(b)** was/were filed on_____.
2. ☐ An election was made by the applicant in response to a restriction requirement set forth during the interview on _____; the restriction requirement and election have been incorporated into this action.
3. ☒ The allowed claim(s) is/are *21-40*. As a result of the allowed claim(s), you may be eligible to benefit from the **Patent Prosecution Highway** program at a participating intellectual property office for the corresponding application. For more information, please see http://www.uspto.gov/patents/init_events/pph/index.jsp or send an inquiry to PPHfeedback@uspto.gov.
4. ☒ Acknowledgment is made of a claim for foreign priority under 35 U.S.C. § 119(a)-(d) or (f).

   **Certified copies:**

   a) ☒ All b) ☐ Some *c) ☐ None of the:
   1. ☐ Certified copies of the priority documents have been received.
   2. ☒ Certified copies of the priority documents have been received in Application No. *13825083* .
   3. ☐ Copies of the certified copies of the priority documents have been received in this national stage application from the International Bureau (PCT Rule 17.2(a)).

   * Certified copies not received: _____.

Applicant has THREE MONTHS FROM THE "MAILING DATE" of this communication to file a reply complying with the requirements noted below. Failure to timely comply will result in ABANDONMENT of this application.
**THIS THREE-MONTH PERIOD IS NOT EXTENDABLE**.

5. ☐ CORRECTED DRAWINGS ( as "replacement sheets") must be submitted.
   ☐ including changes required by the attached Examiner's Amendment / Comment or in the Office action of Paper No./Mail Date _____.

   **Identifying indicia such as the application number (see 37 CFR 1.84(c)) should be written on the drawings in the front (not the back) of each sheet. Replacement sheet(s) should be labeled as such in the header according to 37 CFR 1.121(d).**
6. ☐ DEPOSIT OF and/or INFORMATION about the deposit of BIOLOGICAL MATERIAL must be submitted. Note the attached Examiner's comment regarding REQUIREMENT FOR THE DEPOSIT OF BIOLOGICAL MATERIAL.

**Attachment(s)**

1. ☐ Notice of References Cited (PTO-892)
2. ☐ Information Disclosure Statements (PTO/SB/08), Paper No./Mail Date _____
3. ☐ Examiner's Comment Regarding Requirement for Deposit of Biological Material
4. ☐ Interview Summary (PTO-413), Paper No./Mail Date _____ .
5. ☐ Examiner's Amendment/Comment
6. ☐ Examiner's Statement of Reasons for Allowance
7. ☐ Other _____.

| /DAVID C COMSTOCK/<br>Examiner, Art Unit 3733 | /Pedro Philogene/<br>Primary Examiner, Art Unit 3733 |
|---|---|

OK TO ENTER: /D.C.C/

05/14/2017

**IN THE UNITED STATES PATENT AND TRADEMARK OFFICE**

| | |
|---|---|
| Applicant(s): Na<br><br>Application No.: 15096686<br><br>Filed: 4/12/2016<br><br>Title: METHOD, SYSTEM, AND APPARATUS FOR DERMATOLOGICAL TREATMENT<br><br>Attorney Docket No.: NA001KR_US2 | Art Unit: 3733<br><br>Examiner: David Comstock |

Commissioner for Patents
P.O. Box 1450
Alexandria, VA 22313-1450

RESPONSE AFTER FINAL

Dear Sir:

A Final office action was mailed on April 6, 2017 with a shortened statutory response time of 3 months. Filing of this response is thus timely and Applicant respectfully requests its entry as it requires no new search or reconsideration other than addressing a terminal disclaimer disapproval that now has been approved.

Claim listing begins on page 2.

Remarks begin on page 6.

# Issue Classification

| Application/Control No. | Applicant(s)/Patent Under Reexamination |
|---|---|
| 15096686 | NA, JONGJU |
| **Examiner** | **Art Unit** |
| DAVID C COMSTOCK | 3733 |

| CPC | | | | | | | |
|---|---|---|---|---|---|---|---|
| **Symbol** | | | | | | **Type** | **Version** |
| A61H | | 39 | / | 086 | | F | 2013-01-01 |
| A61H | | 15 | / | 02 | | I | 2013-01-01 |
| A61H | | 23 | / | 02 | | A | 2013-01-01 |
| A61H | | 39 | / | 002 | | I | 2013-01-01 |
| A61H | | 2015 | / | 0014 | | A | 2013-01-01 |
| A61H | | 2039 | / | 005 | | A | 2013-01-01 |
| A61H | | 2201 | / | 0153 | | A | 2013-01-01 |
| A61H | | 2201 | / | 1604 | | A | 2013-01-01 |
| A61H | | 2201 | / | 169 | | A | 2013-01-01 |
| A61H | | 2201 | / | 5097 | | A | 2013-01-01 |
| A61H | | 2205 | / | 022 | | A | 2013-01-01 |
| A61H | | 2205 | / | 04 | | A | 2013-01-01 |
| A61H | | 2205 | / | 06 | | A | 2013-01-01 |
| A61H | | 2205 | / | 065 | | A | 2013-01-01 |
| A61H | | 2205 | / | 084 | | A | 2013-01-01 |
| A61H | | 2205 | / | 10 | | A | 2013-01-01 |
| A61H | | 2205 | / | 12 | | A | 2013-01-01 |
| A61M | | 37 | / | 00 | | I | 2013-01-01 |
| A61N | | 5 | / | 0616 | | I | 2013-01-01 |
| A61N | | 2005 | / | 0644 | | A | 2013-01-01 |
| A61N | | 2005 | / | 0652 | | A | 2013-01-01 |
| A61N | | 1 | / | 0502 | | I | 2013-01-01 |
| A61N | | 1 | / | 328 | | I | 2013-01-01 |
| A61B | | 2017 | / | 3409 | | A | 2013-01-01 |
| A61H | | 39 | / | 007 | | I | 2013-01-01 |
| A61H | | 2201 | / | 5007 | | A | 2013-01-01 |
| A61M | | 2037 | / | 0023 | | A | 2013-01-01 |
| A61N | | 1 | / | 36017 | | I | 2013-01-01 |
| A61H | | 2201 | / | 105 | | A | 2013-01-01 |
| A61H | | 2201 | / | 1207 | | A | 2013-01-01 |
| A61M | | 2037 | / | 0007 | | A | 2013-01-01 |

| | | | |
|---|---|---|---|
| /DAVID C COMSTOCK/<br>Examiner.Art Unit 3733 | 5/14/17 | **Total Claims Allowed:** | |
| (Assistant Examiner) | (Date) | 20 | |
| /PEDRO PHILOGENE/<br>Primary Examiner.Art Unit 3733 | 05/15/2017 | O.G. Print Claim(s) | O.G. Print Figure |
| (Primary Examiner) | (Date) | 1 | 1A |

| Issue Classification | Application/Control No. | Applicant(s)/Patent Under Reexamination |
|---|---|---|
| | 15096686 | NA, JONGJU |
| | **Examiner** | **Art Unit** |
| | DAVID C COMSTOCK | 3733 |

| | | | | | |
|---|---|---|---|---|---|
| A61M | | 2205 | / | 8206 | A | 2013-01-01 |
| A61N | | 5 | / | 062 | I | 2013-01-01 |
| A61N | | 5 | / | 0624 | I | 2013-01-01 |
| A61N | | 2005 | / | 0659 | A | 2013-01-01 |
| A61N | | 2005 | / | 0661 | A | 2013-01-01 |

| CPC Combination Sets | | | | | | | | |
|---|---|---|---|---|---|---|---|---|
| **Symbol** | | | | | **Type** | **Set** | **Ranking** | **Version** |
| | | | / | | | | | |
| | | | / | | | | | |

| | | | |
|---|---|---|---|
| /DAVID C COMSTOCK/<br>Examiner.Art Unit 3733 | 5/14/17 | **Total Claims Allowed:** | |
| (Assistant Examiner) | (Date) | 20 | |
| /PEDRO PHILOGENE/<br>Primary Examiner.Art Unit 3733 | 05/15/2017 | O.G. Print Claim(s) | O.G. Print Figure |
| (Primary Examiner) | (Date) | 1 | 1A |

| Issue Classification | Application/Control No. | Applicant(s)/Patent Under Reexamination |
|---|---|---|
| | 15096686 | NA, JONGJU |
| | **Examiner** | **Art Unit** |
| | DAVID C COMSTOCK | 3733 |

| US ORIGINAL CLASSIFICATION | | INTERNATIONAL CLASSIFICATION | | | | | | | | | | |
|---|---|---|---|---|---|---|---|---|---|---|---|---|
| CLASS | SUBCLASS | CLAIMED | | | | | NON-CLAIMED | | | | | |
| 600 | 249 | A | 6 | 1 | H | 39 / 00 (2006.0) | | | | | | |

| CROSS REFERENCE(S) | | | | | |
|---|---|---|---|---|---|
| CLASS | SUBCLASS (ONE SUBCLASS PER BLOCK) | | | | |
| | | | | | |
| | | | | | |
| | | | | | |
| | | | | | |
| | | | | | |
| | | | | | |
| | | | | | |
| | | | | | |
| | | | | | |
| | | | | | |
| | | | | | |
| | | | | | |

| | | | |
|---|---|---|---|
| /DAVID C COMSTOCK/<br>Examiner.Art Unit 3733 | 5/14/17 | **Total Claims Allowed:** | |
| (Assistant Examiner) | (Date) | 20 | |
| /PEDRO PHILOGENE/<br>Primary Examiner.Art Unit 3733 | 05/15/2017 | O.G. Print Claim(s) | O.G. Print Figure |
| (Primary Examiner) | (Date) | 1 | 1A |

| Issue Classification | Application/Control No. | Applicant(s)/Patent Under Reexamination |
|---|---|---|
| | 15096686 | NA, JONGJU |
| | **Examiner** | **Art Unit** |
| | DAVID C COMSTOCK | 3733 |

☐ Claims renumbered in the same order as presented by applicant ☐ CPA ☐ T.D. ☐ R.1.47

| Final | Original | Final | Original | Final | Original | Final | Original | Final | Original | Final | Original | Final | Original | Final | Original |
|---|---|---|---|---|---|---|---|---|---|---|---|---|---|---|---|
| | 1 | | 17 | 13 | 33 | | | | | | | | | | |
| | 2 | | 18 | 14 | 34 | | | | | | | | | | |
| | 3 | | 19 | 15 | 35 | | | | | | | | | | |
| | 4 | | 20 | 16 | 36 | | | | | | | | | | |
| | 5 | 1 | 21 | 17 | 37 | | | | | | | | | | |
| | 6 | 2 | 22 | 18 | 38 | | | | | | | | | | |
| | 7 | 3 | 23 | 19 | 39 | | | | | | | | | | |
| | 8 | 4 | 24 | 20 | 40 | | | | | | | | | | |
| | 9 | 5 | 25 | | | | | | | | | | | | |
| | 10 | 6 | 26 | | | | | | | | | | | | |
| | 11 | 7 | 27 | | | | | | | | | | | | |
| | 12 | 9 | 28 | | | | | | | | | | | | |
| | 13 | 10 | 29 | | | | | | | | | | | | |
| | 14 | 8 | 30 | | | | | | | | | | | | |
| | 15 | 11 | 31 | | | | | | | | | | | | |
| | 16 | 12 | 32 | | | | | | | | | | | | |

| | | | |
|---|---|---|---|
| /DAVID C COMSTOCK/<br>Examiner.Art Unit 3733<br><br>(Assistant Examiner) | 5/14/17<br><br>(Date) | **Total Claims Allowed:**<br>20 | |
| /PEDRO PHILOGENE/<br>Primary Examiner.Art Unit 3733<br><br>(Primary Examiner) | 05/15/2017<br><br>(Date) | O.G. Print Claim(s)<br>1 | O.G. Print Figure<br>1A |

| Index of Claims | Application/Control No. | Applicant(s)/Patent Under Reexamination |
|---|---|---|
| | 15096686 | NA, JONGJU |
| | Examiner | Art Unit |
| | DAVID C COMSTOCK | 3733 |

| | | | | | | | |
|---|---|---|---|---|---|---|---|
| ✓ | Rejected | - | Cancelled | N | Non-Elected | A | Appeal |
| = | Allowed | ÷ | Restricted | I | Interference | O | Objected |

☐ Claims renumbered in the same order as presented by applicant ☐ CPA ☐ T.D. ☐ R.1.47

| CLAIM | | DATE | | | | | | | | |
|---|---|---|---|---|---|---|---|---|---|---|
| Final | Original | 11/28/2016 | 04/02/2017 | 05/14/2017 | | | | | | |
| | 1 | - | - | - | | | | | | |
| | 2 | - | - | - | | | | | | |
| | 3 | - | - | - | | | | | | |
| | 4 | - | - | - | | | | | | |
| | 5 | - | - | - | | | | | | |
| | 6 | - | - | - | | | | | | |
| | 7 | - | - | - | | | | | | |
| | 8 | - | - | - | | | | | | |
| | 9 | - | - | - | | | | | | |
| | 10 | - | - | - | | | | | | |
| | 11 | - | - | - | | | | | | |
| | 12 | - | - | - | | | | | | |
| | 13 | - | - | - | | | | | | |
| | 14 | - | - | - | | | | | | |
| | 15 | - | - | - | | | | | | |
| | 16 | - | - | - | | | | | | |
| | 17 | - | - | - | | | | | | |
| | 18 | - | - | - | | | | | | |
| | 19 | - | - | - | | | | | | |
| | 20 | - | - | - | | | | | | |
| 1 | 21 | ✓ | ✓ | = | | | | | | |
| 2 | 22 | ✓ | ✓ | = | | | | | | |
| 3 | 23 | ✓ | ✓ | = | | | | | | |
| 4 | 24 | ✓ | ✓ | = | | | | | | |
| 5 | 25 | ✓ | ✓ | = | | | | | | |
| 6 | 26 | ✓ | ✓ | = | | | | | | |
| 7 | 27 | ✓ | ✓ | = | | | | | | |
| 9 | 28 | ✓ | ✓ | = | | | | | | |
| 10 | 29 | ✓ | ✓ | = | | | | | | |
| 8 | 30 | ✓ | ✓ | = | | | | | | |
| 11 | 31 | ✓ | ✓ | = | | | | | | |
| 12 | 32 | ✓ | ✓ | = | | | | | | |
| 13 | 33 | ✓ | ✓ | = | | | | | | |
| 14 | 34 | ✓ | ✓ | = | | | | | | |
| 15 | 35 | ✓ | ✓ | = | | | | | | |
| 16 | 36 | ✓ | ✓ | = | | | | | | |

| Index of Claims | Application/Control No. | Applicant(s)/Patent Under Reexamination |
|---|---|---|
| | 15096686 | NA, JONGJU |
| | Examiner | Art Unit |
| | DAVID C COMSTOCK | 3733 |

| | | | | | | | |
|---|---|---|---|---|---|---|---|
| ✓ | Rejected | - | Cancelled | N | Non-Elected | A | Appeal |
| = | Allowed | ÷ | Restricted | I | Interference | O | Objected |

☐ Claims renumbered in the same order as presented by applicant ☐ CPA ☐ T.D. ☐ R.1.47

| CLAIM | | DATE | | | | | | | | |
|---|---|---|---|---|---|---|---|---|---|---|
| Final | Original | 11/28/2016 | 04/02/2017 | 05/14/2017 | | | | | | |
| 17 | 37 | ✓ | ✓ | = | | | | | | |
| 18 | 38 | ✓ | ✓ | = | | | | | | |
| 19 | 39 | ✓ | ✓ | = | | | | | | |
| 20 | 40 | ✓ | ✓ | = | | | | | | |

| Search Notes | Application/Control No. | Applicant(s)/Patent Under Reexamination |
|---|---|---|
| | 15096686 | NA, JONGJU |
| | Examiner | Art Unit |
| | DAVID C COMSTOCK | 3733 |

## CPC- SEARCHED

| Symbol | Date | Examiner |
|---|---|---|
| A61B17/320068 | 11/28/2016 | /DC/ |
| A61B1/06, 20 | 11/28/2016 | /DC/ |
| A61N 1/30 | 11/28/2016 | /DC/ |
| A61N5/0616 | 11/28/2016 | /DC/ |
| A61M37/00, 0015 | 11/28/2016 | /DC/ |
| A61M2037/0007, 0046, 0061 | 11/28/2016 | /DC/ |
| Search updated | 4/2/2017 | /DC/ |
| Search updated | 5/14/2017 | /DC/ |

## CPC COMBINATION SETS - SEARCHED

| Symbol | Date | Examiner |
|---|---|---|
| | | |

## US CLASSIFICATION SEARCHED

| Class | Subclass | Date | Examiner |
|---|---|---|---|
| 600 | 246 | 11/28/2016 | /DC/ |
| 601 | 2 | 11/28/2016 | /DC/ |
| 604 | 20, 21, 46, 117 | 11/28/2016 | /DC/ |
| 606 | 9 | 11/28/2016 | /DC/ |
| 607 | 102, 189 | 11/28/2016 | /DC/ |
| 424 | 1.11 | 11/28/2016 | /DC/ |
| Search updated | | 4/2/2017 | /DC/ |
| Search updated | | 5/14/2017 | /DC/ |

## SEARCH NOTES

| Search Notes | Date | Examiner |
|---|---|---|
| EAST text search--see printout | 11/28/2016 | /DC/ |
| Inventor name search--see EAST printout | 11/28/2016 | /DC/ |

| /DAVID C COMSTOCK/<br>Examiner.Art Unit 3733 | |
|---|---|

| SEARCH NOTES | | |
|---|---|---|
| **Search Notes** | **Date** | **Examiner** |
| EAST text search updated--see printout | 4/2/2017 | /DC/ |
| EAST text search updated--see printout | 5/14/2017 | /DC/ |

| INTERFERENCE SEARCH | | | |
|---|---|---|---|
| **US Class/ CPC Symbol** | **US Subclass / CPC Group** | **Date** | **Examiner** |
| See interference search history printout | | 5/14/2017 | /DC/ |

| | |
|---|---|
| /DAVID C COMSTOCK/<br>Examiner.Art Unit 3733 | |

**EAST Search History**

**EAST Search History (Prior Art)**

| Ref # | Hits | Search Query | DBs | Default Operator | Plurals | Time Stamp |
|---|---|---|---|---|---|---|
| L18 | 12250 | ((600/246) or (601/2) or (604/20,21,46,117) or (606/9) or (607/102,189) or (424/1.11)).CCLS. | US-PGPUB; USPAT; USOCR | OR | OFF | 2017/05/14 22:31 |
| L19 | 9736 | A61B17/320068.cpc. A61B1/06,20.cpc. A61N1/30.cpc. A61N5/0616.cpc. A61M37/00,0015.cpc. A61M2037/0007,0046,0061.cpc. | US-PGPUB; USPAT; USOCR | OR | OFF | 2017/05/14 22:32 |
| L20 | 812 | (needle same motor) and (dermatological or dermalogical or dermis or skin) and electric$3 and (led or "l.e.d." or "light emitting diode") | US-PGPUB; USPAT; USOCR | OR | OFF | 2017/05/14 22:33 |
| L21 | 130 | (18 19 20) and @pd>"20170402" | US-PGPUB; USPAT; USOCR | OR | OFF | 2017/05/14 22:34 |
| L23 | 1 | (apparatus and treating and dermatological and tissue and device and plurality and needles and extending and distance and surface and penetrate and signal and generator and electrically and coupled).clm. | US-PGPUB; USPAT; USOCR | OR | OFF | 2017/05/14 22:38 |

**EAST Search History (Interference)**

| Ref # | Hits | Search Query | DBs | Default Operator | Plurals | Time Stamp |
|---|---|---|---|---|---|---|
| L22 | 1 | (method and treating and dermatological and tissue and placing and device and surface and plurality and needles and extending and distance and directing and signal and generator and electrically and coupled and produce and pulsed and radio and frequency).clm. | US-PGPUB; USPAT | OR | OFF | 2017/05/14 22:37 |

**5/14/2017 10:38:58 PM**
**C:\Users\dcomstock\Documents\EAST\Workspaces\default.wsp**

PTO/SB/08a (03-15)
Approved for use through 07/31/2016. OMB 0651-0031
U.S. Patent and Trademark Office; U.S. DEPARTMENT OF COMMERCE

Under the Paperwork Reduction Act of 1995, no persons are required to respond to a collection of information unless it contains a valid OMB control number.

# INFORMATION DISCLOSURE STATEMENT BY APPLICANT

**( Not for submission under 37 CFR 1.99)**

| | |
|---|---|
| Application Number | 15096686 |
| Filing Date | 2016-04-12 |
| First Named Inventor | Jongju Na |
| Art Unit | 3733 |
| Examiner Name | COMSTOCK, DAVID C |
| Attorney Docket Number | NA001KR_US2 |

**U.S.PATENTS** Remove

| Examiner Initial* | Cite No | Patent Number | Kind Code[1] | Issue Date | Name of Patentee or Applicant of cited Document | Pages,Columns,Lines where Relevant Passages or Relevant Figures Appear |
|---|---|---|---|---|---|---|
| | 1 | 7824394 | B2 | 2010-11-02 | Manstein, Dieter | |
| | 2 | 7618429 | B2 | 2005-12-22 | Mulholland, R. Stephen | |
| | 3 | 6890319 | B1 | 2005-10-10 | Crocker, Peter John | |

If you wish to add additional U.S. Patent citation information please click the Add button. Add

**U.S.PATENT APPLICATION PUBLICATIONS** Remove

| Examiner Initial* | Cite No | Publication Number | Kind Code[1] | Publication Date | Name of Patentee or Applicant of cited Document | Pages,Columns,Lines where Relevant Passages or Relevant Figures Appear |
|---|---|---|---|---|---|---|
| | 1 | 20090312691 | A1 | 2009-12-17 | Kim et al. | |
| | 2 | 20080269666 | A1 | 2008-10-30 | Wang et al. | |
| | 3 | 20070276318 | A1 | 2007-11-29 | Henley, Julian L. | |

| INFORMATION DISCLOSURE STATEMENT BY APPLICANT ( Not for submission under 37 CFR 1.99) | | |
|---|---|---|
| | Application Number | 15096686 |
| | Filing Date | 2016-04-12 |
| | First Named Inventor | Jongju Na |
| | Art Unit | 3733 |
| | Examiner Name | COMSTOCK, DAVID C |
| | Attorney Docket Number | NA001KR_US2 |

| | | | | | | | |
|---|---|---|---|---|---|---|---|
| | 4 | 20070231255 | A1 | 2007-10-04 | Barolet et al. | | |
| | 5 | 20070142885 | A1 | 2007-06-21 | Hantash et al. | | |
| | 6 | 20070073217 | A1 | 2007-03-29 | James, Terry L. | | |
| | 7 | 20080082090 | A1 | 2008-04-03 | MANSTEIN, DIETER | paragraphs [0002] and [0036], claims 1, 3-5, 16, 19 and 22-24 and figures 3-5 | |

If you wish to add additional U.S. Published Application citation information please click the Add button. Add

**FOREIGN PATENT DOCUMENTS** Remove

| Examiner Initial* | Cite No | Foreign Document Number[3] | Country Code[2] i | Kind Code[4] | Publication Date | Name of Patentee or Applicant of cited Document | Pages,Columns,Lines where Relevant Passages or Relevant Figures Appear | T[5] |
|---|---|---|---|---|---|---|---|---|
| | 1 | 10-2011-000221 | KR | A | 2011-01-07 | YANG, WON DONG | paragraphs [0024], [0055], [0057], [0062], [0071], [0073]-[0075], [0078], [0095], [0099]-[0100], [0103], | |
| | 2 | 10-2010-001828 | KR | A | 2010-02-17 | NA, JONG JU | paragraphs [0030]-[0037] and [0043], claims 3-4 and figures 4-6 | |
| | 3 | 2009-506873 | JP | A | 2009-02-19 | THE FOUNDRY, INC | paragraphs [0053], [0085] and [0088], claims 1-4 and 14-17 and figures 8A-8C | |

If you wish to add additional Foreign Patent Document citation information please click the Add button Add

**NON-PATENT LITERATURE DOCUMENTS** Remove

| Examiner Initials* | Cite No | Include name of the author (in CAPITAL LETTERS), title of the article (when appropriate), title of the item (book, magazine, journal, serial, symposium, catalog, etc), date, pages(s), volume-issue number(s), publisher, city and/or country where published. | T[5] |
|---|---|---|---|

| INFORMATION DISCLOSURE STATEMENT BY APPLICANT ( Not for submission under 37 CFR 1.99) | | |
|---|---|---|
| | Application Number | 15096686 |
| | Filing Date | 2016-04-12 |
| | First Named Inventor | Jongju Na |
| | Art Unit | 3733 |
| | Examiner Name | COMSTOCK, DAVID C |
| | Attorney Docket Number | NA001KR_US2 |

| | | |
|---|---|---|
| | 1 | WRITTEN OPINION OF THE INTERNATIONAL SEARCHING AUTHORITY FOR International application No. PCT/KR2012/001335 mailed 28.09.2012 (7 pages) |
| | 2 | INTERNA TTONAL SEARCH REPORT FOR International application No. PCT/KR2012/001335 mailed 28.09.2012 (3 pages) |

If you wish to add additional non-patent literature document citation information please click the Add button Add

**EXAMINER SIGNATURE**

| Examiner Signature | | Date Considered | |
|---|---|---|---|

*EXAMINER: Initial if reference considered, whether or not citation is in conformance with MPEP 609. Draw line through a citation if not in conformance and not considered. Include copy of this form with next communication to applicant.

[1] See Kind Codes of USPTO Patent Documents at www.USPTO.GOV or MPEP 901.04. [2] Enter office that issued the document, by the two-letter code (WIPO Standard ST.3). [3] For Japanese patent documents, the indication of the year of the reign of the Emperor must precede the serial number of the patent document. [4] Kind of document by the appropriate symbols as indicated on the document under WIPO Standard ST.16 if possible. [5] Applicant is to place a check mark here if English language translation is attached.

# INFORMATION DISCLOSURE STATEMENT BY APPLICANT

**( Not for submission under 37 CFR 1.99)**

| | |
|---|---|
| Application Number | 15096686 |
| Filing Date | 2016-04-12 |
| First Named Inventor | Jongju Na |
| Art Unit | 3733 |
| Examiner Name | COMSTOCK, DAVID C |
| Attorney Docket Number | NA001KR_US2 |

## CERTIFICATION STATEMENT

Please see 37 CFR 1.97 and 1.98 to make the appropriate selection(s):

That each item of information contained in the information disclosure statement was first cited in any communication from a foreign patent office in a counterpart foreign application not more than three months prior to the filing of the information disclosure statement. See 37 CFR 1.97(e)(1).

**OR**

☐ That no item of information contained in the information disclosure statement was cited in a communication from a foreign patent office in a counterpart foreign application, and, to the knowledge of the person signing the certification after making reasonable inquiry, no item of information contained in the information disclosure statement was known to any individual designated in 37 CFR 1.56(c) more than three months prior to the filing of the information disclosure statement. See 37 CFR 1.97(e)(2).

See attached certification statement.

☒ The fee set forth in 37 CFR 1.17 (p) has been submitted herewith.

A certification statement is not submitted herewith.

## SIGNATURE

A signature of the applicant or representative is required in accordance with CFR 1.33, 10.18. Please see CFR 1.4(d) for the form of the signature.

| | | | |
|---|---|---|---|
| Signature | /mwresq/ | Date (YYYY-MM-DD) | 2017-08-18 |
| Name/Print | Merle W Richman | Registration Number | 38282 |

This collection of information is required by 37 CFR 1.97 and 1.98. The information is required to obtain or retain a benefit by the public which is to file (and by the USPTO to process) an application. Confidentiality is governed by 35 U.S.C. 122 and 37 CFR 1.14. This collection is estimated to take 1 hour to complete, including gathering, preparing and submitting the completed application form to the USPTO. Time will vary depending upon the individual case. Any comments on the amount of time you require to complete this form and/or suggestions for reducing this burden, should be sent to the Chief Information Officer, U.S. Patent and Trademark Office, U.S. Department of Commerce, P.O. Box 1450, Alexandria, VA 22313-1450. DO NOT SEND FEES OR COMPLETED FORMS TO THIS ADDRESS. **SEND TO: Commissioner for Patents, P.O. Box 1450, Alexandria, VA 22313-1450.**

# Privacy Act Statement

The Privacy Act of 1974 (P.L. 93-579) requires that you be given certain information in connection with your submission of the attached form related to a patent application or patent. Accordingly, pursuant to the requirements of the Act, please be advised that: (1) the general authority for the collection of this information is 35 U.S.C. 2(b)(2); (2) furnishing of the information solicited is voluntary; and (3) the principal purpose for which the information is used by the U.S. Patent and Trademark Office is to process and/or examine your submission related to a patent application or patent. If you do not furnish the requested information, the U.S. Patent and Trademark Office may not be able to process and/or examine your submission, which may result in termination of proceedings or abandonment of the application or expiration of the patent.

The information provided by you in this form will be subject to the following routine uses:

1. The information on this form will be treated confidentially to the extent allowed under the Freedom of Information Act (5 U.S.C. 552) and the Privacy Act (5 U.S.C. 552a). Records from this system of records may be disclosed to the Department of Justice to determine whether the Freedom of Information Act requires disclosure of these record s.

2. A record from this system of records may be disclosed, as a routine use, in the course of presenting evidence to a court, magistrate, or administrative tribunal, including disclosures to opposing counsel in the course of settlement negotiations.

3. A record in this system of records may be disclosed, as a routine use, to a Member of Congress submitting a request involving an individual, to whom the record pertains, when the individual has requested assistance from the Member with respect to the subject matter of the record.

4. A record in this system of records may be disclosed, as a routine use, to a contractor of the Agency having need for the information in order to perform a contract. Recipients of information shall be required to comply with the requirements of the Privacy Act of 1974, as amended, pursuant to 5 U.S.C. 552a(m).

5. A record related to an International Application filed under the Patent Cooperation Treaty in this system of records may be disclosed, as a routine use, to the International Bureau of the World Intellectual Property Organization, pursuant to the Patent Cooperation Treaty.

6. A record in this system of records may be disclosed, as a routine use, to another federal agency for purposes of National Security review (35 U.S.C. 181) and for review pursuant to the Atomic Energy Act (42 U.S.C. 218(c)).

7. A record from this system of records may be disclosed, as a routine use, to the Administrator, General Services, or his/her designee, during an inspection of records conducted by GSA as part of that agency's responsibility to recommend improvements in records management practices and programs, under authority of 44 U.S.C. 2904 and 2906. Such disclosure shall be made in accordance with the GSA regulations governing inspection of records for this purpose, and any other relevant (i.e., GSA or Commerce) directive. Such disclosure shall not be used to make determinations about individuals.

8. A record from this system of records may be disclosed, as a routine use, to the public after either publication of the application pursuant to 35 U.S.C. 122(b) or issuance of a patent pursuant to 35 U.S.C. 151. Further, a record may be disclosed, subject to the limitations of 37 CFR 1.14, as a routine use, to the public if the record was filed in an application which became abandoned or in which the proceedings were terminated and which application is referenced by either a published application, an application open to public inspections or an issued patent.

9. A record from this system of records may be disclosed, as a routine use, to a Federal, State, or local law enforcement agency, if the USPTO becomes aware of a violation or potential violation of law or regulation.

(19) 대한민국특허청(KR)
(12) 등록특허공보(B1)

(45) 공고일자 2011년02월14일
(11) 등록번호 10-1013581
(24) 등록일자 2011년01월31일

(51) Int. Cl.
*A61H 15/00* (2006.01)
(21) 출원번호 10-2008-0076993
(22) 출원일자 2008년08월06일
심사청구일자 2008년08월06일
(65) 공개번호 10-2010-0018288
(43) 공개일자 2010년02월17일
(56) 선행기술조사문헌
KR200418106 Y1*
*는 심사관에 의하여 인용된 문헌

(73) 특허권자
**라종주**
충남 천안시 쌍용2동 889-2 대우빌딩2층
(72) 발명자
**라종주**
충남 천안시 쌍용2동 889-2 대우빌딩2층
(74) 대리인
**특허법인맥**

전체 청구항 수 : 총 5 항 심사관 : 양성연

## (54) 전기 피부 미용기

(57) 요 약

전기 피부 미용기 및 전기 피부 미용 시스템이 개시된다. 본 발명은, 환자의 피부에 접촉되어 회전되는 롤러부, 롤러부를 환자의 피부상에서 가압할 수 있도록, 롤러부에 결합되는 손잡이부, 및 손잡이부에 결합되며, 롤러부에 전기가 도통되도록 전기발생 장치로부터의 연결단자와 접속되는 전기 입력부를 포함한다. 본 발명에 따르면, 피부층에서의 이온 자극 및 소정 주파수의 전기적인 진동 자극을 가함으로써, 피부층에서의 용액, 크림, 젤, 연고제 등의 흡수율을 획기적으로 높여 피부조직의 효과적인 재생이 가능하게 된다.

대 표 도 - 도1

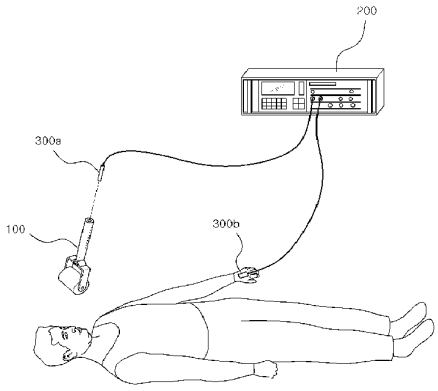

*특허청구의 범위*

**청구항 1**

환자의 피부에 접촉되어 회전되는 롤러부;

상기 롤러부를 환자의 피부상에서 가압할 수 있도록, 상기 롤러부에 결합되는 손잡이부;

상기 롤러부에 전기가 도통되도록 상기 롤러부에 전압을 공급하는 전원 공급부; 및

상기 손잡이부의 외부에 결합되며, 상기 롤러부에 공급된 전압과 반대 극성의 전압을 상기 전원 공급부로부터 공급받는 접지부

를 포함하는 전기 피부 미용기.

**청구항 2**

삭제

**청구항 3**

일면에 복수개의 금속성 침체가 삽입된 평판부;

상기 평판부의 중심축 상에서 상기 평판부에 결합되는 손잡이부; 및

상기 복수개의 금속성 침체에 전기가 도통되도록 상기 복수개의 금속성 침체에 전압을 공급하는 전원 공급부

를 포함하며,

피시술자의 피부에서의 피부 개선용 물질의 흡수율을 높이기 위해, 상기 복수개의 금속성 침체는 상기 피시술자의 피부에 마이크로 홀을 형성하고, 상기 복수개의 금속성 침체는 상기 전원 공급부로부터의 전기에 의해 상기 피시술자의 피부 진피층에 전기적 자극을 가하는 것인 전기 피부 미용기.

**청구항 4**

삭제

**청구항 5**

제3항에 있어서,

상기 복수개의 금속성 침체의 끝에는 상기 전원 공급부에 의해 이온, 라디오파, 초음파, 고주파, 중주파, 및 저주파 중 어느 하나가 발생하는 것인 전기 피부 미용기.

**청구항 6**

삭제

**청구항 7**

제3항에 있어서,

상기 손잡이부의 외부에 결합되며, 상기 금속성 침체에 공급된 전압과 반대 극성의 전압을 상기 전원 공급부로부터 공급받는 접지부를 더 포함하는 전기 피부 미용기.

**청구항 8**

삭제

**청구항 9**

제3항에 있어서,

상기 손잡이부는 내부에 적어도 하나의 탄성체를 포함하는 것인 전기 피부 미용기.

명 세 서

발명의 상세한 설명

기 술 분 야

[0001] 본 발명은 전기 피부 미용기 및 전기 피부 미용 시스템에 관한 것으로, 더욱 상세하게는 피부조직의 효과적인 재생을 위한 전기 피부 미용기 및 전기 피부 미용 시스템에 관한 것이다.

배 경 기 술

[0002] 피부조직의 노화, 흉터, 여드름 자국 등을 개선하기 위한 방법으로서, 종래에는 단순히 피부재생을 위한 용액, 크림, 젤, 연고제 등의 의약품을 단순히 피부에 도포하는 방식에 의한 치료만이 이루어졌다. 그러나, 피부에 도포된 용액, 크림, 젤, 연고제 등의 양에서 피부의 진피층으로 흡수되어 치료에 유효하게 작용하는 용액, 크림, 젤, 연고제 등의 양은 상대적으로 그 비율이 매우 작으며, 그 결과 효과적인 피부조직의 개선을 위한 치료가 이루어지지 않는다는 문제점이 있었다. 따라서, 피부조직의 효과적인 재생을 위해 피부층에서의 용액, 크림, 젤, 연고제 등의 흡수율을 획기적으로 높일 수 있는 방법이 필요하게 되었다.

발명의 내용

해결 하고자하는 과제

[0003] 따라서, 본 발명의 목적은, 피부조직의 효과적인 재생을 위한 전기 피부 미용기 및 전기 피부 미용 시스템을 제공함에 있다.

과제 해결수단

[0004] 상기 목적을 달성하기 위한 본 발명에 따른 전기 피부 미용기는, 환자의 피부에 접촉되어 회전되는 롤러부; 상기 롤러부를 환자의 피부상에서 가압할 수 있도록, 상기 롤러부에 결합되는 손잡이부; 및 상기 손잡이부에 결합되며, 상기 롤러부에 전기가 도통되도록 전기발생 장치로부터의 연결단자와 접속되는 전기 입력부를 포함한다.

[0005] 한편, 본 발명에 따른 전기 피부 미용 시스템은 환자의 피부에 접촉되어 회전되는 롤러부, 상기 롤러부를 환자의 피부상에서 가압할 수 있도록, 상기 롤러부에 결합되는 손잡이부, 및 상기 손잡이부에 결합되며, 상기 롤러부에 전기가 도통되도록 전기발생 장치로부터의 연결단자와 접속되는 전기 입력부를 구비하는 전기 피부 미용기; 및 상기 전기 피부 미용기의 상기 전기 입력부와 접속되는 연결단자를 통해 상기 전기 피부 미용기의 상기 롤러부에 전기가 도통되도록 하는 전기발생 장치를 포함한다.

[0006] 한편, 본 발명에 따른 전기 피부 미용기는, 환자의 피부에 접촉되어 회전되는 롤러부; 상기 롤러부를 환자의 피부상에서 가압할 수 있도록, 상기 롤러부에 결합되는 손잡이부; 및 상기 롤러부에 전기가 도통되도록 상기 롤러부에 전압을 공급하는 전원 공급부를 포함한다.

[0007] 바람직하게는, 상기 환자가 손으로 잡을 수 있도록 상기 손잡이부의 외부에 결합되며, 상기 롤러부에 공급된 전압과 반대 극성의 전압을 상기 전원 공급부로부터 공급받는 접지부를 더 포함한다.

[0008] 한편, 본 발명에 따른 전기 피부 미용기는, 일면에 복수개의 금속성 침체가 삽입된 평판부; 상기 평판부의 중심축 상에서 상기 평판부에 결합되는 손잡이부; 및 상기 금속성 침체에 전기가 도통되도록 상기 금속성 침체에 전압을 공급하는 전원 공급부를 포함한다.

[0009] 바람직하게는, 상기 손잡이부의 외부에 결합되며, 상기 금속성 침체에 공급된 전압과 반대 극성의 전압을 상기 전원 공급부로부터 공급받는 접지부를 더 포함한다.

[0010] 또한, 상기 복수개의 금속성 침체의 끝에는 상기 전원 공급부에 의해 이온, 라디오파, 초음파, 고주파, 중주파, 및 저주파 중 어느 하나가 발생하는 것을 특징으로 한다.

효 과

[0011] 이상 설명한 바와 같이, 본 발명에 따르면, 피부층에서의 이온 자극 및 소정 주파수의 전기적인 진동 자극을 가함으로써, 피부층에서의 용액, 크림, 젤, 연고제 등의 흡수율을 획기적으로 높여 피부조직의 효과적인 재생이

가능하게 된다.

## 발명의 실시를 위한 구체적인 내용

[0012] 이하에서는 도면을 참조하여 본 발명을 보다 상세하게 설명한다. 도면들 중 동일한 구성요소들은 가능한 한 어느 곳에서든지 동일한 부호들로 나타내고 있음에 유의해야 한다. 또한 본 발명의 요지를 불필요하게 흐릴 수 있는 공지 기능 및 구성에 대한 상세한 설명은 생략한다.

[0013] 도 1은 본 발명의 일실시예에 따른 전기 피부 미용 시스템을 이용한 시술 장면을 나타내는 도면이다. 도 1을 참조하면, 본 발명에 따른 전기 피부 미용 시스템은 전기 피부 미용기(100), 전기발생 장치(200), 및 연결단자(300a,300b)를 포함한다.

[0014] 여기서, 전기 피부 미용기(100)는 연결단자(300a)를 통해서 공급받은 전기발생 장치(200)에서 생성된 전기를 이용하여 환자의 치료부위에 전기자극을 가하며, 전기발생 장치(200)는 연결단자(300a)를 통해서 전기 피부 미용기(100)에 전기를 공급하고, 연결단자(300a,300b)는 전기발생 장치(200)의 (+),(-)극에 각각 연결되어 있으며, 전기발생 장치(200)의 (-)극에 연결된 연결단자(300a)는 전기 피부 미용기(100)에 접속되어, 전기 피부 미용기(100)에 전기발생 장치(200)로부터의 전기가 도통되도록 하고, 전기발생 장치(200)의 (+)극에 연결된 연결단자(300b)는 환자의 신체에 부착된다.

[0015] 즉, 시술자는 전기발생 장치(200)의 (-)극에 연결된 연결단자(300a)를 전기 피부 미용기(100)에 접속하고, 전기발생 장치(200)의 (+)극에 연결된 연결단자(300b)를 환자의 신체에 부착시킴으로써, 전기 피부 미용기(100)를 통하여 시술을 하는 동안에 환자의 치료부위에 전기자극이 가해지도록 한다.

[0016] 이러한 과정 중에 시술자는 환자의 치료부위에 비타민C 원액 또는 콜라겐 등을 반복적으로 도포함으로써, 피부조직의 재생이 효율적으로 이루어지게 한다. 한편, 본 발명을 실시함에 있어서, 전기발생 장치(200)의 (+)극에 연결된 연결단자(300a)를 전기 피부 미용기(100)에 접속하고, 전기발생 장치(200)의 (-)극에 연결된 연결단자(300b)를 환자의 신체에 부착할 수도 있을 것이다.

[0017] 본 발명을 실시함에 있어서, 전기발생 장치(200)는 교류전류를 발생시킬 수도 있을 것이며, 주파수에 따라 전기 피부 미용기(100) 상의 금속성 침체의 끝에는 라디오파, 초음파, 고주파, 중주파, 및 저주파 등이 발생할 수 있을 것이다. 한편, 전기발생 장치(200)는 (+)전류와 (-)전류가 일정 주기로 교번되는 펄스 전류를 발생시킬 수도 있을 것이다.

[0018] 도 2는 본 발명의 일실시예에 따른 전기 피부 미용기를 도시한 도면이다. 도 2를 참조하면, 본 발명의 일실시예에 따른 전기 피부 미용기(100)는 전기 입력부(110), 손잡이부(130), 및 롤러부(450)를 포함한다.

[0019] 여기서, 전기 입력부(110)에는 전기발생 장치(200)로부터의 연결단자(300a)가 삽입되며, 전기 피부 미용기(100)를 이용한 시술에 필요한 전기가 전기발생 장치(200)로부터 연결단자(300a)를 통해 전기 입력부(110)로 입력된다.

[0020] 한편, 손잡이부(130)는 시술자가 본 발명에 따른 전기 피부 미용기(100)로 환자에게 시술을 하는 경우에 손으로 잡는 부분이며, 롤러부(450)는 환자의 시술부위에 직접 가압을 하는 부분으로서, 환자의 피부에 접촉된 상태에서 회전될 수 있도록 제작된다.

[0021] 또한, 롤러부(450)는 금속 재질로 제작되어, 전기 입력부(110)를 통해 입력된 전기가 롤러부(450)를 통해 환자의 피부에 전달된다.

[0022] 즉, 시술자는 환자의 시술부위 상에서 전기 피부 미용기(100)의 손잡이부(130)를 잡고 적당한 압력을 가하여 롤러부(450)를 굴림으로써, 환자의 시술부위에 이온 자극 및 전기 자극을 가할 수 있게 된다.

[0023] 도 3은 본 발명의 다른 실시예에 따른 전기 피부 미용기의 구조를 나타낸 도면이다. 도 3을 참조하면, 본 발명의 다른 실시예에 따른 전기 피부 미용기(100)는 손잡이부(130), 롤러부(450), 전원 공급부(170), 스위칭부(175), 및 접지부(190)를 포함한다.

[0024] 손잡이부(130), 및 롤러부(450)는 도 2에서의 본 발명의 일실시예에 따른 전기 피부 미용기(100)에서의 손잡이부(130), 및 롤러부(450)와 기능 및 작용이 동일하다.

[0025] 도 2에서의 본 발명의 일실시예에 따른 전기 피부 미용기(100)는 전기 입력부(110)가 구비되어 외부의 전기발생 장치(200)로부터의 전기가 입력되었으나, 도 3에서의 본 발명의 다른 실시예에 따른 전기 피부 미용기(100)는

휴대용으로 제작된 것으로서, 내부에 자체 전원 공급부(170)를 구비하고 있다.

[0026] 즉, 전원 공급부(170)에 연결된 스위칭부(175)를 'on'으로 하는 경우에, 전원 공급부(170)는 롤러부(450)에 전압을 공급하여 롤러부(450)에는 전기가 흐르게 된다.

[0027] 한편, 도 3에서의 전기 피부 미용기(100)의 손잡이부(130)의 외부에는 금속 재질의 접지부(190)가 결합되어 있으며, 접지부(190)는 롤러부(450)에 공급된 전압과 반대 극성의 전압을 전원 공급부(170)로부터 공급받는다.

[0028] 그에 따라, 도 3에서의 전기 피부 미용기(100)를 이용하여 환자가 직접 시술하는 경우에 (+)전압이 공급되는 롤러부(450)는 시술부위 피부에 접촉한 상태에서 (-)전압이 공급되는 접지부(190)를 손으로 파지함으로써 치료부위에 전기자극이 가해지게 된다.

[0029] 즉, 도 3에서의 전기 피부 미용기(100)에 의하면, 환자는 전기 피부 미용기(100)를 휴대하고 다니면서, 스위칭부(175)를 'on'으로 한 뒤, 손잡이부(130)에 결합된 접지부(190)를 손으로 파지한 상태에서 전기가 흐르는 롤러부(450)를 자신의 얼굴 등의 피부에 직접 문지르는 동작을 통해 직접 시술을 할 수 있게 된다.

[0030] 도 4는 본 발명의 또 다른 실시예에 따른 전기 피부 미용기의 구조를 나타낸 도면이다. 도 4를 참조하면, 본 발명의 또 다른 실시예에 따른 전기 피부 미용기(100)는 도 3에서의 롤러부(450) 대신에 평판부(150)를 구비한다.

[0031] 도 4에서의 본 발명의 또 다른 실시예에 따른 전기 피부 미용기는 도 3에서의 전기 피부 미용기(100)에서와 같이 휴대용으로 제작된 것으로서, 내부에 자체 전원 공급부(170)를 구비하고 있다.

[0032] 한편, 도 4에서의 평판부(150)는 환자의 시술부위에 직접 가압을 하는 부분으로서, 평판부(150)의 하측면에는 다수의 극미세 침체(micro needle:151)가 구비되어 있다.

[0033] 여기서, 극미세 침체(151)는 평판부(150)에 형성된 다수의 홀에 삽입되어 고정되어 있으며, 평판부(150)를 기준으로 일정한 길이(A)만큼 돌출되어 있다. 극미세 침체(151)의 돌출길이(A)는 0.8㎜ 또는 2.1㎜ 또는 0.24㎜인 것이 바람직하며, 극미세 침체(151)의 지름은 0.3㎜로 함이 바람직할 것이나, 본 발명을 실시함에 있어서, 극미체 침체(151)의 돌출길이(A) 및 극미세 침체(151)의 지름은 시술부위 및 시술용도에 따라 다양한 변경 및 조합이 가능할 것이다.

[0034] 또한, 전원 공급부(170)로부터 발생된 전기는 손잡이부(130)의 내부에 구비되어 있는 전기 전달체를 통하여 극미세 침체(151)에 전달되며, 극미체 침체(151)는 시술자에 의해 피부 진피층에 삽입된 상태에서 피부조직에 이온 자극 및 소정 주파수의 전기 자극을 가하게 된다.

[0035] 한편, 본 발명에 따른 전기 침술기의 손잡이부(130)의 내부에는 시술의 용이성을 확보하기 위한 탄성절편(133)이 적어도 하나 이상 형성되어 있는 것이 바람직하다. 손잡이부(130)의 내부에 삽입된 탄성절편(133)에는 탄성특성이 우수한 고무절편이 사용될 수도 있고, 기타 판형 스프링 등이 사용될 수도 있을 것이다.

[0036] 손잡이부(130)의 내부에 삽입된 탄성절편(133)은 극미세 침체(151)가 시술부위의 진피층으로 부드럽게 삽입되어 이온 자극 및 소정 주파수의 진동 자극을 가하도록 하는 기능을 하게 된다.

[0037] 전원 공급부(170)에 구비된 스위칭부(175)를 'on'으로 하는 경우에, 전원 공급부(170)는 극미세 침체(151)에 전압을 공급하며, 손잡이부(130)의 외부에 결합된 금속성의 접지부(190)에는 극미세 침체(151)에 공급된 전압과 반대 극성의 전압이 공급된다.

[0038] 즉, 환자는 도 4에서의 전기 피부 미용기(100)를 직접 시술하는 경우에 (+)전압이 공급되는 극미세 침체(151)를 시술부위 피부 진피층에 삽입한 상태에서 (-)전압이 공급되는 접지부(190)를 손으로 파지함으로써 치료부위에 전기자극이 가해지도록 한다.

[0039] 도 5는 도 4에서의 전기 피부 미용기의 저면도로서 평판부의 하측면을 도시하는 도면이다. 도 5를 참조하면, 본 발명에 따른 전기 피부 미용기(100)의 평판부(150)는 직사각형의 형상을 하고 있으며, 그 내부에는 다수의 홀(hole)(159)이 형성되어 있다. 본 발명을 실시함에 있어서, 평판부(150)의 형상은 직사각형, 마름모형, 원형, 타원형 등의 시술자의 편리에 따른 다양한 형상(예를 들어, 환자의 시술 부위의 형상과 유사한 형상 등)으로 이루어질 수 있을 것이다.

[0040] 평판부(150)에 형성된 홀(159)은 가로방향으로 14개의 행을 따라 동일한 간격으로 위치하고 있으며, 세로방향으로는 10개의 행을 따라 동일한 간격으로 위치하고 있다. 그 결과, 평판부(150)에는 등간격의 격자형상으로 총 140개의 홀(159)이 형성된다. 이와 같이 평판부(150)에 형성된 다수의 홀(159)에는 환자의 시술부위에 미세상처

를 내기 위한 극미세 침체(151)가 삽입되어 고정된다.

[0041] 다만, 본 발명을 실시함에 있어서, 평판부(150)에 형성된 홀(159)의 개수 및 간격은 시술목적에 따라 적절하게 조정될 수 있을 것이다.

[0042] 도 6은 도 4에서의 전기 피부 미용기의 평판부의 분해 사시도이다. 도 4 내지 도 6을 참조하면 본 발명에 따른 전기 피부 미용기(100)의 평판부(150)는 복수개의 극미세 침체(151), 하면부(153), 전기 전도부(155), 및 상면부(157)를 포함한다.

[0043] 복수개의 극미세 침체(151)는 하면부(153)에 형성된 복수개의 홀(159)을 통해 하면부(153)와 결합되어 있으며, 하면부(153)는 전기 전도부(155)와 결합되어 있다. 여기서, 복수개의 극미세 침체(151)는 하면부(153)를 관통하여, 전기 전도부(155)에 전기적으로 결합되어 있다.

[0044] 전기 피부 미용기(100)의 전원 공급부(170)에서 발생된 전기는 손잡이부(130) 내의 도전성의 전기 전달체를 통하여 전기 전도부(155)로 전해지며, 최종적으로는 전기 전도부(155)에 전기적으로 결합되어 있는 복수개의 극미세 침체(151)에 전달된다. 그 결과 극미체 침체(151)는 시술자에 의해 피부 진피층에 삽입된 상태에서 피부조직에 이온 자극 및 소정 주파수의 전기 자극을 가하게 된다.

[0045] 한편, 전기 전도부(155)는 상면부(157)와 결합되어 있으며, 상면부(157)는 전기 피부 미용기(100)의 손잡이부(130)와 일체로서 연결되어 있거나, 나사방식에 의해서 결합되어 있을 수도 있을 것이다.

[0046] 도 4에서의 본 발명의 또 다른 실시예에 따른 전기 피부 미용기(100)의 시술과정을 설명하면, 환자는 전기 피부 미용기(100)의 손잡이부(130)를 잡고서, 다수의 극미세 침체(151)를 환자의 시술부위에 대고 압력을 가한다. 이러한 과정의 반복을 통해 환자의 시술부위에는 무수히 많은 미세상처(즉, 마이크로 홀)가 생기게 되고, 이러한 마이크로 홀 내의 극미세 침체(151) 끝에서는 소정의 주파수의 전류가 주위의 피부조직으로 전도되며, 이에 따라 극미세 침체(151) 주변의 피부조직의 이온을 흥분시키거나 전기적 진동 자극에 의한 열을 일으키게 된다.

[0047] 이와 같은 피부 진피층에서의 이온 자극 및 소정 주파수의 전기적인 진동 자극을 통해서, 피부조직의 효과적인 재생을 위해 피부층에서의 용액, 크림, 젤, 연고제 등의 흡수율을 획기적으로 높여 환자의 피부 조직은 빠른 속도로 새로운 조직을 형성하게 된다.

[0048] 이상에서는 본 발명의 바람직한 실시예 및 응용예에 대하여 도시하고 설명하였지만, 본 발명은 상술한 특정의 실시예 및 응용예에 한정되지 아니하며, 청구범위에서 청구하는 본 발명의 요지를 벗어남이 없이 당해 발명이 속하는 기술분야에서 통상의 지식을 가진자에 의해 다양한 변형실시가 가능한 것은 물론이고, 이러한 변형실시들은 본 발명의 기술적 사상이나 전망으로부터 개별적으로 이해되어져서는 안될 것이다.

## 도면의 간단한 설명

[0049] 도 1은 본 발명의 일실시예에 따른 전기 피부 미용 시스템을 이용한 시술 장면을 나타내는 도면,

[0050] 도 2는 본 발명의 일실시예에 따른 전기 피부 미용기를 도시한 도면,

[0051] 도 3은 본 발명의 다른 실시예에 따른 전기 피부 미용기의 구조를 나타낸 도면,

[0052] 도 4는 본 발명의 또 다른 실시예에 따른 전기 피부 미용기의 구조를 나타낸 도면,

[0053] 도 5는 도 4에서의 전기 피부 미용기의 저면도로서 평판부의 하측면을 도시하는 도면, 및

[0054] 도 6은 도 4에서의 전기 피부 미용기의 평판부의 분해 사시도이다.

도면

도면1

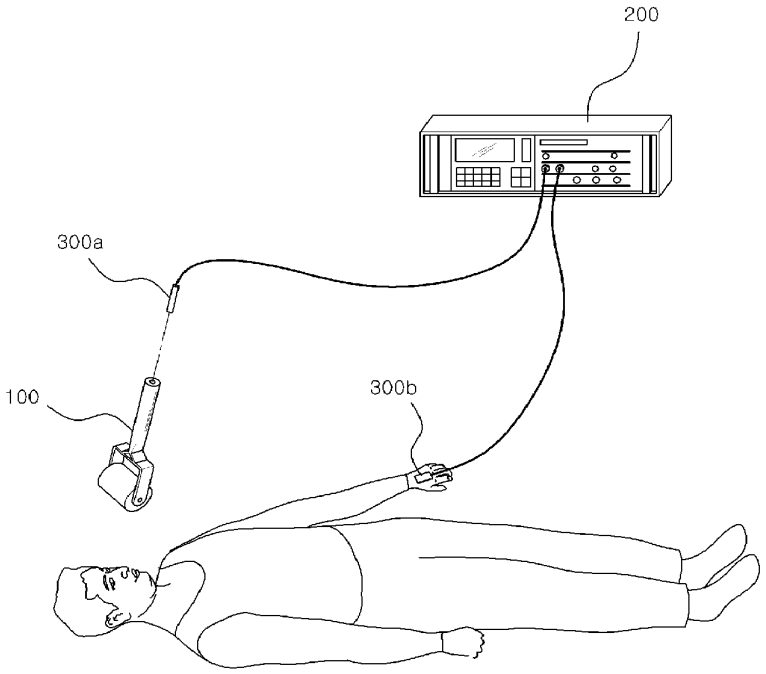


도면2

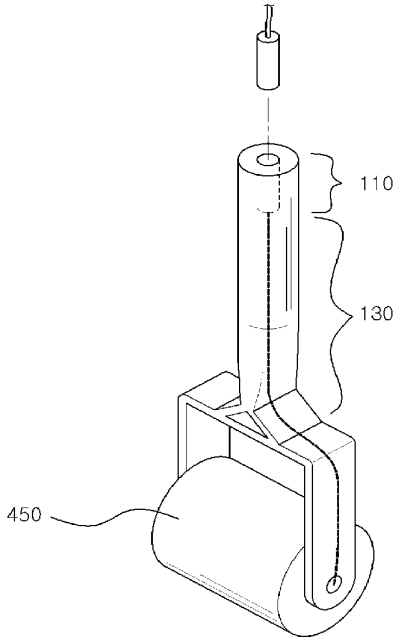

도면3

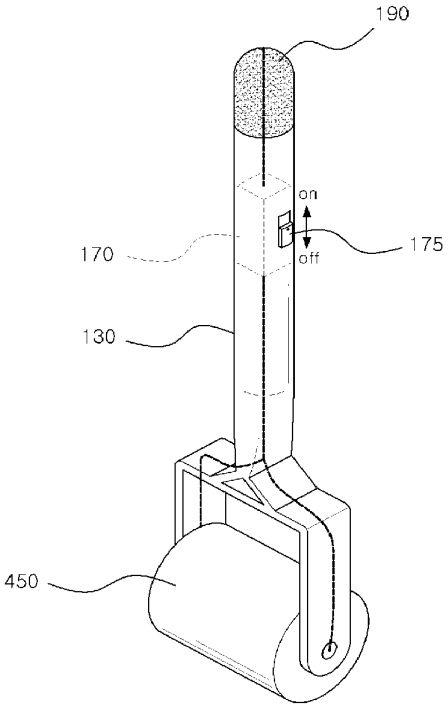


도면4

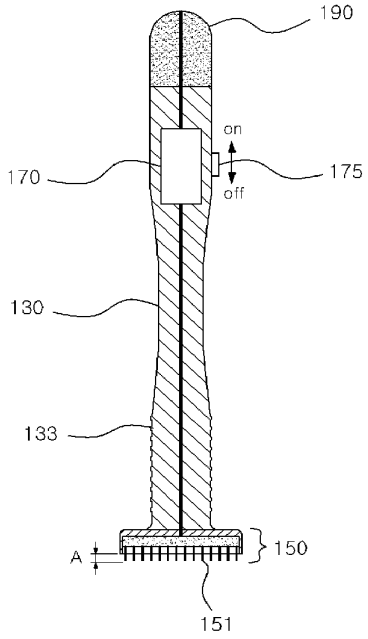

도면5

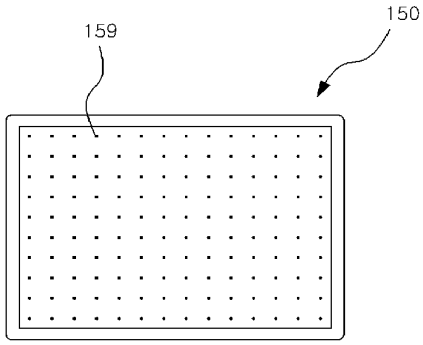


도면6

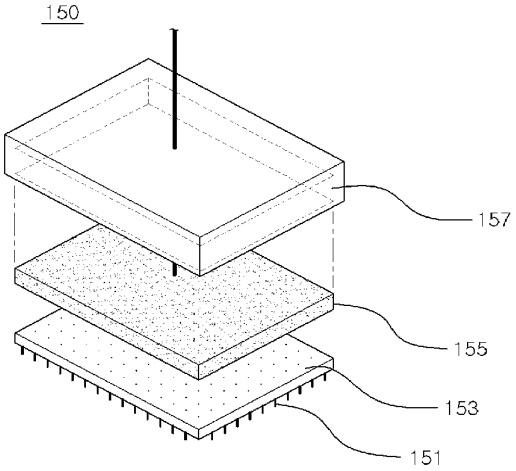

(19) 대한민국특허청(KR)
(12) 공개특허공보(A)

(11) 공개번호 10-2011-0002210
(43) 공개일자 2011년01월07일

(51) Int. Cl.
*A61H 39/08* (2006.01) *A61N 1/00* (2006.01)
*A61H 39/04* (2006.01)
(21) 출원번호 10-2009-0059689
(22) 출원일자 2009년07월01일
심사청구일자 2009년07월01일

(71) 출원인
**양원동**
서울시 관악구

(72) 발명자
**양원동**
서울시 관악구

(74) 대리인
**김건우**

전체 청구항 수 : 총 15 항

# (54) 기능성 침체

(57) 요 약

본 발명은 피부미용, 탈모치료, 비만치료 등을 위한 다중천공 시술 장치 및 방법에 관한 것으로서, 더욱 상세하게는 여러 개의 침이 식립된 침체로 인체의 피부에 구멍을 뚫을 수 있으며 시술시간을 단축할 수 있고 시술시의 통증을 최소화할 수 있는 등 시술의 효과를 극대화할 수 있고 특히 다양한 전기파로 이루어진 전기 자극 침체가 인설되어 미세전류 발생장치로부터 발생한 미세전류인 전기파를 이용하여 인체를 자극하여 통증완화와 치료효과를 증진할 수 있는 전기 자극 침체가 인설된 기능성 침체에 관한 것이다.

대 표 도 - 도6

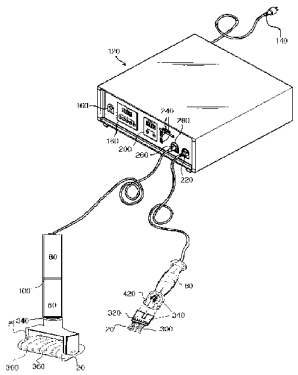

*특허청구의 범위*

**청구항 1**

다수의 침이 식립된 침체부(300)에 인설된 전기 자극 침체 몸체(20)와 전기파를 발생하는 제어부 몸체(120)와 사용자가 파지하는 손잡이 부(60)로 구성되며,

상기 제어부 몸체(120) 또는 손잡이부(60)에는 전기파 발생부(40)와 이를 작동하는 작동 스위치(160)와 조절 스위치(180)와 표시부(200)와 모드 선택 스위치(240)와,

압축기를 통한 에어 발생기(20)와 이를 상기 전기 자극 침체 몸체(20)로 연결하여주는 연결 케이블(260) 또는 에어 분출구(220)가 제어부 몸체(120)에 인설되는 것을 특징으로 기능성 침체.

**청구항 2**

침체부(300)는 침체가 탈 부착되는 침체 탈 부착부(340)가 구성되고 회전 작용 또는 왕복작용을 하는 침체부(300)상에 식립되어 침체 헤드 탈 부착부(260)에 의해 손잡이부(60)가 탈 부착되며 상기 침체부(300)를 고정해주는 침체 고정부재(220)로 구성되는 것을 특징으로 기능성 침체.

**청구항 3**

제2항에 있어서,

상기 침체부(300) 또는 침 삽입 홀(360)에 전기파가 통전 되도록 전기파 발생부(40)로부터의 연결단자(280) 또는 접속단이 설치되며 상기 전기 자극 침체에서 발생하는 전기파의 세기와 종류를 설정하는 조절 스위치(180)와 상기 설정된 특성들을 표시하는 표시부(200)와 컨트롤러의 작동을 제어하기 위한 작동스위치(160)와 모드 선택 스위치(240)가 제어부 몸체(120) 또는 손잡이부(60)에 부착되는 것을 특징으로 기능성 침체.

**청구항 4**

제3항에 있어서,

상기 전기파 발생부(40)는 트랜스포머의 전기파 발생 회로부(PCB)상의 코일로부터 스파이크 펄스를 출력하는 스파이크 펄스 발생 회로 부가 제어부 몸체(120) 또는 손잡이부(60) 내부에 인설되며, 상기 스파이크 펄스 발생 회로로부터 제공되는 한쪽의 전극이 되는 복수의 침체부(300)를 갖는 양 전극부 또는 상기 스파이크 펄스가 제공되는 다른 쪽의 전극이 되는 음 전극부를 구비하여 상기 침체부(300)와 연통 되어진 것을 특징으로 기능성 침체.

**청구항 5**

전기 자극 침체 몸체(20)의 치료 전기인 스파이크 펄스의 주파수는 9.0±0.2Hz, 펄스 폭은 100~800㎲ 범위이며 펄스 폭 기간의 양의 피크 전압치가 1.5~100V가 되며 상기 펄스 폭 기간에서 양전극부 전압이 소정 전압치 이상을 유지하도록, 상기 출력 트랜스포머의 코일의 감은 수의 비를 설정하여 전기파가 발생하는 것을 특징으로 기능성 침체.

**청구항 6**

제1항 내지 제5항 중 어느 한 항에 있어서,

손잡이부(60)에 연결 케이블(260)을 통해 침체부(300)의 침체로 전기파가 전달되는 연결 단자(280)가 구비되고, 상기 제어부 몸체(120) 또는 손잡이부(60) 내부에 인설되어 공급되는 전원을 미세 직류전류로 변환시키는 전기파 발생부(40)가 구비되며, 상기 제어부 몸체(120) 또는 손잡이 부(60)상에 전기파 발생부(40)로 공급되는 전원을 제어할 수 있는 작동 스위치(160) 및 상기 작동 표시부(200)가 구비된 것을 특징으로 기능성 침체.

**청구항 7**

제1항에 있어서,

전기 자극 침체 몸체(20)에 공급되는 전원은 콘덴서와 저항과 트랜지스터 및 가변저항과 연결되며 상기 작동 스위치(160)가 켜(on)지면 상기에서 공급된 전원이 상기 콘덴서를 충전시키기 위하여 가변 저항 측으로 흐름과

동시에 트랜지스터의 컬렉터에 인가되고, 콘덴서가 충전될 때까지 가변저항 측으로 흐르는 전류는 저항과 저항에서 발생하는 전압 강하분 만큼만 트랜지스터의 베이스 측으로 흐르고, 이후 콘덴서의 충전이 끝나면 콘덴서는 디커플링 콘덴서의 역할을 하게 되어 전류는 트랜지스터의 베이스에 그대로 인가됨으로써 미세 전기파가 침체부(300)에 발생 되어 표피에 전달되는 것을 특징으로 기능성 침체.

**청구항 8**

제7항에 있어서,

전기 자극 침체 몸체(20)의 전기파를 발생시키는 전기파 발생부(40)는 적어도 하나의 전기파 발생부(40)를 포함하는 것을 특징으로 기능성 침체.

**청구항 9**

제8항에 있어서,

상기 전기 자극 침체 몸체(20)의 침체부(300)에 형성된 침체 일측에 양극(+) 및 음극(-)의 전극이 맞게 장착되어 상기 침체부(300)에 전기파를 전달하는 것을 특징으로 하는 기능성 침체.

**청구항 10**

제9항에 있어서,

상기 침체부(300)는 피시술자의 피부 상에서 가압할 수 있도록, 상기 침체부(300)에 탈부착 되는 손잡이부(60)가 구성되고 상기 다수개의 침체부(300)에 전기파가 통전 되도록 전기파발생 장치로부터의 연결단자(280)와 접속되는 전기파 입력부를 포함하는 것을 특징으로 하는 기능성 침체.

**청구항 11**

제10항에 있어서,

상기 침체부(300)에는 형성된 다수개의 침체부(300)의 끝에는 상기 전기파 발생 장치에 의해 라디오파, 초음파, 고주파, 중주파, 저주파 중 선택된 어느 하나가 전기파가 전기파 발생부(40)에 의하여 발생하여 피부 표면에 전달되는 것을 특징으로 하는 기능성 침체.

**청구항 12**

제11항에 있어서,

상기 전기파 발생부(40)를 갖는 제어부 몸체(120)에는 출력단에 각기 연결되는 +/- 도전판과, 상기 침체부(300)와 결합하면서 상기 +/- 도전판에 각각 연결되며 인체에 접촉시 전류를 발생시키는 전극이 구성된 것을 특징으로 하는 기능성 침체.

**청구항 13**

제12항에 있어서,

상기 자극기 본체(20), 헤드 부(40)와,손잡이부 (60)와 ,작동스위치(160)로 이루어지고 다수의 침(100)이 식립된 침 다발(120)과 이를 고정하는 침 다발 고정부(140)와 상기 침 다발이 부착된 침 결합 판(160)과 이와 연통된 진동판(200)과 이를 전원에 의하여 회전 유동하는 구동 부재(180)가 부착되고 상기 구동부재(180)의 회전운동을 직선운동으로 바꿔주는 크랭크부(400) 및 캠 축으로 구성되어 상기 침체가 피부 및 두피에 왕복 자극하는 것을 특징으로 하는 기능성 침체.

**청구항 14**

제13항에 있어서,

상기 침체 구동부재(420)는 전동모터, 에어 터빈, 초음파 중 선택된 어느 하나이고 상기 크랭크 부(380)는 침체 구동 부재(420)에 의한 회전운동을 캠 부(400)를 통하여 왕복 운동하는 것을 특징으로 하는 피부자극기.

**청구항 15**

제14항에 있어서,

상기 침체부(300) 에는 자력이 발생하는 자석으로 된 것을 특징으로 하는 피부자극기.

명 세 서

발명의 상세한 설명

기 술 분 야

[0001] 본 발명은 상기하였듯이 피부 자극 및 치료용으로 사용되는 침체의 일측부에 부착된 전기 자극 침에 관한 것으로서, 더욱 자세하게는 통증을 완화하고 제거하는 치료 효과를 보다 높일 수 있는 침체에 인설된 전기 치료기를 침체에 부여할 수 있는 기능성 침체를 제공하는 데 있다.

[0002] 본원발명의 침체의 시술법으로는 한방에서 시술하는 시침방법과 양방병원 피부과에서 시술하는 탄산가스 및 레이저를 이용한 탄산 요법, 프락셀 레이저 치료법이 있으나, 고가의 시술비용과 시술 후 부작용과 더불어서 치료기간 동안 일상생활에 규제가 따른다는 점에서 최근에는 의료기관이 아닌 가정에서 상기의 침이 박힌 롤러를 이용하여 피부미용을 실시하고 있다.

[0003] 본원에서 사용하는 침체 헤드부에 부착되는 침은 종류가 매우 다양하여 가장 가는 것은 그 지름이 0.1mm 이하이며 가장 두꺼운 것은 지름이 0.5mm 이상이 되는 것도 시중에 판매가 되고 있고 가는 것일수록 피부자극이 덜하여 사용시 고통이 감소하고 상기 침의 구경의 두께가 굵을수록 삽입시 통증이 증가하는 한편 피부에 더 많은 자극을 주므로 효과가 뛰어나다 할 수 있으며 침의 길이도 길이가 짧은 0.5mm부터 2cm 이상이 되는 기다란 롤러침이 시중에 출시되고 있다.

[0004] 종래의 예리한 다량의 침이 식립된 침체는 고가이다 보니 대부분의 사용자가 하나를 구입하여 사용하는데 상기의 롤러를 피부에 사용하다 보면 인체의 방어기전의 원리로 외부 침투 물질로부터 피부가 저항하는 인체 인체표피층과의 충격이나 피부의 마찰 또는 사용중 주위의 물리적인 충격으로 상기 침 끝이 휘거나 마모되는 문제점이 발생하였으며 특히 상기의 롤러 침을 장기간에 걸쳐서 사용하다 보면 상기의 롤러 침을 가정에서 제아무리 살균이나 소독을 한다 하여도 상기의 롤러 침의 사용시에 접촉되는 인체의 혈액이나 분비물과 고름 등이 묻게 되어 자칫하다가는 교차 감염이 발생할 수 있는 문제점이 대두하였다.

[0005] 결국에는 이를 해결하려면 상기 침체 전체를 교환하는 비용지출과 경제적 손실이 발생하였다.

[0006] 본원 발명은 상기와 같은 문제점을 보완하여 사용중 침 끝이 마모나 파손된 침이 식립된 침체를 간편하게 분리하고 상기의 새로운 침체를 간단하게 부착하고 침 시술시 전기 자극 침체를 작동하여 고통 없이 효과 있게 시술하는데 그 목적이 있다.

[0007] 상기 목적을 달성하기 위하여, 본 발명은, 전기파 치료기에 있어서, 전기파를 발생시키는 전기파 발생부와; 상기 전기파 발생부를 수용하며, 파지할 수 있는 손잡이부를 갖는 본체와 전기파 발생부로부터 발생된 전기파가 출력되는 적어도 하나의 전기파 발생부를 포함하는 것을 특징으로 하는 전기파 치료기를 제공한다.

[0008] 또한, 상기 본체에는 상기 전기파 발생부로 전원을 공급하는 전원 공급부와, 상기 전기파 발생부의 작동을 제어하는 제어부가 마련되어 있는 것이 바람직하다.

[0009] 본원에서는 전기파 침은 일면에 다수개의 침체가 삽입된 침체부의 중심축 상에서 상기 침체부에 결합하는 손잡이부, 및 손잡이부에 결합하며, 다수개의 금속성침체에 전기파가 통전 되도록 전기발생 장치로부터의 연결단자와 접속되는 전기 입력부를 구비한다.

[0010] 또한, 본원에서 사용되는 전기자극은 흔히 일반적으로 간섭파(Interference)라고 부르며 간섭파란, 서로 다른 중주파를 교차시킬 때에 인체 안에서 만들어지는 파형을 말하며 이러한 것을 고전적 간섭파형(Classic Interference) 혹은 4극 간섭파(4-pole IF)라고 부르며 독일의 네멕(Nemec)이라는 사람이 가장 먼저 발견하였다고 하여 네멕간섭이라고도 부르는데 용어적인 차이는 있지만, 이러한 파형은 모든 간섭파 치료기 기들이 다 갖고 있는 기본적인 파형이다.

[0011] 이러한 파형을 대각선으로 교차시키면, 흔히 말하는 클로버형태의 간섭파 형이 몸 안에서 만들어지게 되는데, 이러한 간섭파는 주로 4000Hz 이상의 중주파(혹은 5000 Hz) 혹은 그 이상의 주파수를 사용하며, 이러한 높은 주파수는 피부 저항이 적기 때문에 상대적으로 많은 전류를 인체 내에 효과적으로 보낼 수가 있는 것이다.

[0012] 또한, 인체 내에서 발생하는 간섭파로 치료하기 때문에, 경피 신경만을 자극하는 일반 저주파 치료기보다 침투 깊이가 더욱 깊으며 더욱 넓은 부위를 자극할 수가 있다.

[0013] 한편, 인간은 나이가 들어감에 따라 안면근육은 자연스러운 탄탄함과 탄력을 잃게 되어 주름살이 생기거나 피부의 처짐이 발생하게 되므로, 가장 눈에 잘 띄는 얼굴의 주름살과 처짐을 방지하기 위한 피부관리에 신경을 쓰게 된다. 특히, 얼굴의 주름살과 처짐 등을 방지하기 위한 가장 쉬운 방법으로 화장품을 이용하여 안면 피부관리를 수행하고 있다. 이때, 화장품을 이용하여 피부를 관리하는 경우에는 피부 인체 표피의 각질층 밑에는 두꺼운 단백질 보호층으로 방어벽이 형성되어 있고, 이 단백질 보호층에 의해 피부의 인체 표피와 진피층이 분리되어 있으므로 피부보호 효과가 우수한 화장품을 사용하더라도 진피층에 쌓인 노폐물을 제거하지 못하고, 화장품의 영양이 진피층까지 깊숙하게 침투되지 못하여 피부보호의 효과가 미흡한 등의 한계가 있었다.

[0014] 그러나 전기자극을 하여주면 시술시 통증을 줄여주고 콜라겐과 탄성섬유의 생산을 증가시키고 피부 세포를 재생시키는 기능뿐 아니라 세포재생과 혈류증가로 인해 피부를 건강하고 탄력 있게 하여 주어 피부 보호 및 관리에 탁월한 효과를 인정받고 있다.

[0015] 종래의 침체는 피부에 기공만 형성하는데 비하여 본 발명은 상기 침체에 의하여 피부를 일차적으로 천공함과 동시에 전기파 펄스가 인체 내부 깊숙하게 공급될 수 있도록 전기적 자극을 가능하도록 하고 또 한편으로는 신경계통을 자극함으로 통증을 완화하는 기능적 목적을 이룰 수 있는 효과가 있는 것이다.

## 배 경 기 술

[0016] 일반적으로 다중천공 시술 방법은 주로 주름, 여드름 제거, 각질 제거 등과 같은 피부 미용 및 두발 건강을 위한 치료법으로서, 피부에 구멍을 낸 후 그 위에 약물 또는 화장품을 발라 약물 침투가 빠르고 많이 침투하게 하여 약효를 극대화하는 방법과, 피부에 바늘로 자극을 주어 이에 따른 인체의 반사작용으로 콜라겐이 형성되는 것을 유도하는 방법이 있으며, 주요 시술부위는 얼굴과 두피이다.

[0017] 예를 들면, 인체의 피부에 수백~수만 개의 미세한 구멍을 냄으로써, 미세한 구멍을 내는 과정에서 손상된 피부 조직의 자생력을 이용하여 새살이 돋아나게 하고, 미세한 구멍이 생긴 부위에 치료용 약물을 도포하여 이 약물이 미세한 구멍을 통해 피부 속으로 빠르게 침투할 수 있도록 하여 시술의 효과를 극대화할 수 있는 방법이다.

[0018] 본원발명에서 사용되는 전기 자극 침체는, 침체로 인체의 표피에 수많은 기공을 형성하고 인체에 전류를 흐르게 하는 작용에 의해 치료를 행하기 때문에, 인체의 생리적 메커니즘과 밀접하게 관계되며 통상, 통증은, 통증의 원인이 되는 자극에 의해서, 말초 신경으로부터 중추 신경인 척수를 경유하여, 대뇌에 이르러 통증을 자각하는 것이 이미 신경 면역학에 의해 명백하게 되어 있다. 이때, 척수 레벨에서 자극이 전달되었을 때, 운동 신경이 흥분하여, 근육의 긴장이 일어난다.

[0019] 또한, 교감신경이 작동하고, 부신으로부터 카테콜아민이라고 하는 물질이 분비되며 다음으로, 혈관의 수축이 일어나고, 세포 조직에 혈액 부족이 발생한다.

[0020] 이 이상한 대사가 계속되었을 때에 통증 발생 물질로 알려진 브라디키닌이나 세로토닌이 분비된다. 그리고 이들의 물질이 말초 신경으로부터 척수를 경유하여 대뇌에서 재차 통증이 인식되는 메커니즘이 작용한다.

[0021] 한편, 인체는, 신경의 작용과 이온에 의한 전기 신호에 의해서 밸런스가 조정되고, 고유의 주파수가 존재하는 것도 알려져 있다. 예를 들면, 심장으로부터는 심장 전류, 뇌로부터는 뇌파, 신경이나 근육으로부터는 동작 전류, 부상을 당한 부위에서는 손상 전류 등이 생기고 있고, 이것은 미약 전류 이론이라고 불리고 있다. 구체적으로는, 세포의 내측에는 플러스의 전하가, 외측의 세포막에는 마이너스의 전하가 많아지고, 균등하게 이온 균형을 잡음으로써 건강이 유지된다.

[0022] 일반적으로 이온 밸런스는, 칼륨 이온과 나트륨 이온에 의해서 행해지고, 세포막의 내측은 칼륨 이온이 많고, 역으로 세포막의 외측에서는 칼륨 이온이 적고 나트륨 이온이 많아지고, 이것이 대뇌나 신경 세포의 말단의 정보에 의해서 조정되고 있다.

[0023] 또, 뇌파에 있어서도, 일상생활이나 긴장 상태 시에는 13Hz 이상의 베타파가 되고, 적당한 릴랙스 상태일 때에는 7Hz ~13Hz의 알파 파가 되고, 멍하니 있는 상태나 졸음이 있을 때에는 4Hz ~7Hz의 세타파가 발생한다.

[0024] 본 발명은 상기하였듯이 피부 자극기로 사용되는 침체에 부착된 침의 제조방법에 관한 것으로, 더욱 자세하게는 침체에 부착되는 다수개의 침이 부착된 어셈블리를 간단하게 단턱이나 끼움식, 자석 등으로 탈부착 설치할 수 있으며 작업공정을 개선하여 생산성이 향상되고 소비자의 사용시 비용이 적게 드는 전기 자극 침체에 관한 것이

다.

[0025] 상기의 침은 인체 인체표피층을 상하지 않게 하면서도 레이저 박피나 필링 시술 때와 같은 자연치유적 콜라겐 생성 유도로 노화된 피부를 환원시킬 수 있으며, 피부 표면에 국소 마취제를 도포한 후 병변 부위에 롤러를 이용한 시술을 함으로써 흉터나 튼 살, 주름개선 및 여드름 흉터 개선에 효과적이며 특히 미세한 바늘이 피부에 침투되면서 진피조직을 새롭게 구성하고 재배열 시켜주기 때문에 모낭의 파열을 최소화하고, 피부의 변형이나 세포의 괴사를 막아주며 인체의 피부 면을 자극하여 콜라겐 합성과 흉터 회복을 촉진시켜 주는 기법이라 할 수 있다.

[0026] 본원 발명의 유사 선행기술로는 먼저 일본국 특허 출원번호: 10-1994-0001485, 공개번호: 10-1995-0023388, 등록번호: 10-0143375-0000, 발명의 명칭: 초음파미용, 건강 장치가 있는데, 상기 기술은 손잡이부를 가진 본체의 일단 부에 중공 원통 롤러를 회전이 자유롭게 지지하고, 이 중공 원통 롤러의 내부에 초음파 발생 부를 설치하고, 이 중공 원통 롤러 자체가 상기 초음파 발생부에 의해 진동되는 초음파 진동체를 이루고 있는 것으로 하는 초음파 미용, 건강 장치로서, 단순 회전 원통형 롤러 내부에 초음파장치를 담지하는 기술로 본원 발명과는 기술적 구성이 전혀 다르고;

[0027] 대한민국특허 출원번호: 20-2003-0002185, 출원일자: 2003년01월23일, 고안의 명칭: 피부미용기구는 초음파로 인해 진동하는 압전소자가 부착된 진동판이 피부 면을 따라 슬라이딩 되면서 피부표면을 세정할 수 있도록 된 것으로, 하나 이상의 압전소자와; 금속재질의 막판 형상을 이루되, 케이스 안으로 내장되는 일단 부에는 압전소자가 접착 부재를 매개로 부착되고, 타단 부는 외부로 돌출되어 피부와 접촉돼 는 진동판 및 진동판의 일단 부를 감싸 보호하고 손잡이부 기능을 갖는 케이스로 이루어진 피부미용기구로 통상의 초음파가 부착되고 피부와 접촉되는 진동판; 및, 진동판의 일단 부를 감싸 보호하고 손잡이부 기능을 갖는 케이스로 이루어진 피부미용기구로 본원과는 그 기술적 특징과 구성이 각별하고;

[0028] 출원번호: 10-1999-0019723, 공개번호: 특2000-0075228, 고안의 명칭: 초음파를 이용한 미용기기는 각 장치들에 직류전원을 공급하는 전원공급장치와, 트리트먼트를 위한 시간, 초음파 출력레벨, 웨이스/바디 및 이온/크린 선택을 입력하는 키 입력부와, 상기 키 입력 부로부터 입력된 설정 값에 따라 복수의 디스플레이와 초음파 출력부위 동작을 제어하는 마이컴 제어부와, 상기 마이컴 제어부의 제어신호에 따라 웨이스 무버의 제 1 초음파 진동자 또는 제 2 초음파 진동자 중의 어느 하나에 해당하는 전기파의 초음파 신호를 출력하는 것으로 구성되어있으며;

[0029] 다음으로, 출원번호: 10-2003-0039255, 공개번호: 10-2004-0108504, 등록번호: 10-0507453-0000, 발명의 명칭: 피부미용기기의 안정된 전력관리 방법 및 장치, 그리고 이를 이용한 휴대용 피부 미용기는 전원부 충전 전원을 승압하기 위한 DC-DC 컨버터 부; 초음파 소자 또는 이온 도입을 행하는 피부미용기 구동부; 전원 스위치 및 작동스위치의 스위치 부; 작동상태를 표시하는 디스플레이 부; 및 전원부 충전 전원을 승압하기 위한 DC-DC 컨버터 부; 초음파 소자 또는 이온 도입을 행하는 피부미용기 구동부; 전원 스위치 및 작동스위치의 스위치 부; 작동상태를 표시하는 디스플레이부호 구성되어 상기 선행기술과 유사한 것을 특징으로 하는 피부미용기기의 안정된 전력관리방법으로 기술되어 있으며;

[0030] 출원번호/일자: 10-1999-0037517(1999.09.04), 공개번호/일자: 10-2000-0000074(2000.01.15), 등록번호/일자: 10-0319493-0000(2001.12.19), 발명의 명칭: 피부 미용기는, 마이크로 컨트롤러를 이용하여 저주파 또는 이온의 작용으로 피부를 관리하는 미용기에 있어서, 전체 회로를 제어하는 마이크로 컨트롤러를 포함하는 중앙처리부와, 상기 중앙처리부에 외부 신호를 입력시키는 다수의 키 스위치를 갖는 스위치 입력 부와, 상기 입력된 외부 신호에 기초하여 상기 중앙처리부의 제어하에 출력 강도가 상이한 제1의 출력과 제2의 출력을 발생하는 초음파 출력 부와, 직류 전원을 공급하는 전원부를 포함하여 이루어지는 것을 특징으로 하는 피부 미용기와;

[0031] 출원번호/일자: 10-2003-0026413(2003.04.25), 공개번호/일자: 10-2004-0092184(2004.11.03), 등록번호/일자: 10-0507442-0000(2005.08.02), 발명의 명칭: 피부미용장치는, 모드 선택 스위치, 프로그램작동 스위치, 업다운 레벨작동 스위치와 모드 선택 스위치 및 온/오프 작동 스위치에 의한 각종 제어 및 선택신호를 컨트롤러나 침체에 입력하기 위한 제어부와, 상기 제어부에 의한 각종 제어 및 모드 선택 입력에 따라 전원의 온/오프 제어신호를 생성하고 출력레벨제어를 위한 다단계의 듀티를 갖는 제어펄스를 생성하고 다양한 리프팅 전압 출력을 위한 프로그램별 펄스신호와 각 모드별 출력단자 선택신호를 생성하고 표시부의 각 프로그램 및 모드 표시용 LED 구동신호를 생성하도록 구성하는 것을 특징으로 하는 피부미용장치와;

[0032] 출원번호 10-2007-0010701, 등록번호 10-0794640에는, 발명의 명칭이 전기 자극 침체의 롤러 제조방법인 발명이

개시되어 있는데, 상기의 침체는 침을 롤러나 침체에 식립하기 위하여 화학약품으로 부식한 후 접착제를 도포하여 고정시켰던바 상기의 화학물질이나 접착제가 신체에 영향을 미칠 수 있으며 제조공정이 복잡하여 시간이 오래 걸리고 사용시 침이 빠지거나 들어가는 현상이 발생할 수 있는 문제점이 발생하였다.

[0033] 이처럼 상기의 다수의 저주파나 미용기 관련 기술이 출원 또는 등록되어있음을 알 수 있으며 각기 저마다 특정된 기술로 기재되었지만 본원에서처럼 피부 자극 및 천공을 위하여 사용하는 다양한 침이 식립 되어 있는 침체부 및 침체 구동 부재 및 손잡이부를 회전 몸체 결합요 홈 또는 단턱 및 자석이나 나사 산을 통하여 간편하게 탈부착하여 사용자의 선택에 따라서 종류별로 사용할 수 있으며 무엇보다 신체에 부착하는 패드를 사용하지않는 전기 자극 침체는 아직 개시되지 않았다.

[0034] 상기에서 말했듯이 처음에는 예리하였던 롤러나 침체에 부착된 침 끝이 점차 무뎌지게 되거나 세균에 노출되어 장기간에 걸쳐서 사용을 할 수 없고 결국에는 상기 침체 전체를 교환하는 비용지출과 경제적 손실이 발생하였다.

[0035] 이러한 다중천공 시술 방법은 피부를 벗겨내어 손상된 피부가 재생되는 것을 이용하여 주름이나 색소침착이 치료되는 기존의 시술법(레이저, 박피 등)과는 달리 인체 표피를 제거하거나 손상시키지 않고 자체 콜라겐 생성을 유도하는 신개념 세포 복원 방법이라 할 수 있다.

[0036] 부작용없이 간편하고 안전한 다중천공 시술 방법은 다수의 침이 피부에 침투되면서 발생하는 자연적 상처치유(Wound healing)작용으로 진피조직이 새로이 구성되고 재배열되기 때문에 흉터가 얕아지고, 피부가 팽팽하게 당겨지면서 잔주름이 감소하고 색소침착이 개선되어 건강하고 깨끗한 피부로 되돌아갈 수 있다.

[0037] 또한, 수백 개의 침이 몇 분 동안에 수백~수만 개의 엄청난 통과 통로를 제공하여 최신 활성 펩타이드 등의 유효성분을 전달함으로써 치료 효과를 더욱 극대화시킬 수 있다.

[0038] 인체의 피부에 다중천공을 형성하는 방법으로는 상기한 롤러(Multi roller needle)를 이용하는 방법과 다수의 침체가 식립된 침체를 왕복 운동하거나 레이저를 이용하는 다양한 방법 등이 있다.

[0039] 한편, 메조테라피 시술은 비만치료, 튼살, 주름제거, 탈모치료 등을 위하여 치료용 약물을 침체를 통해 인체에 주입하는 시술로서, 먹는 약 또는 바르는 약보다 정확한 효과를 낼 수 있는 치료 방법이다.

[0040] 이와 같이 다중천공 시술은 인체 피부에 구멍을 내고 나서 그 위에 약물을 도포하는 방법으로서, 롤러를 이용하는 방법, 침체를 왕복 운동하는 방법, 레이저를 이용하는 방법, 니들건을 하는 방법 등이 있으나, 이러한 시술법들은 구멍을 낸 후, 약물을 도포함으로써 시술시간이 길고, 또한 도포한 약물이 100% 인체에 흡수되지 않으므로 많은 양의 약물을 사용해야하는 단점이 있다.

[0041] 또한, 메조테라피 시술의 경우 침체를 1개 사용하여 약물을 주사하기 때문에 비만치료, 탈모치료 등과 같이 많은 횟수의 주사가 필요한 경우에는 시술시간이 길어지고, 또한 주사에 수반되는 통증이 커지는 문제가 있다.

[0042] 본원 발명은 상기와 같은 문제점을 보완하여 사용중 침 끝이 마모나 파손된 침이 식립된 침체의 침체가 간편하게 분리하고 새로운 침체부를 부착하여 안전하고 고통 없이 전기자극을 동반하여 인체에 편리하고 효과 있게 시술하는데 그 목적이 있다.

## 발명의 내용

### 해결 하고자하는 과제

[0043] 본 발명은, 침체부에 전기파를 부여하는 기능성 침체에 관한 것으로서, 더욱 상세하게는, 휴대가 간편하며, 신체의 모든 부위에 사용할 수 있는 전기파를 부여하는 침체에 관한 것이다.

[0044] 일반적으로 전기파 치료기는 전기파를 이용하여 신체의 자극점을 자극함으로써, 각종 질환을 예방하거나 치료하는데 널리 사용되고 있다.

[0045] 근래에는, 신체에 부착되는 접착 패드를 마련하고, 접착 패드에 전기파를 흘려 신체의 자극점을 자극하는 전기파 치료기가 널리 보급되어 있다.

[0046] 이러한 접착 패드를 이용하는 전기파 치료기는, 접착 패드가 부착되는 신체 부위에 전기파가 잘 흐르도록 접착력이 있는 물질이나 물파스 등과 같은 약제를 도포하여 사용하게 된다.

[0047] 그런데 종래의 전기파 치료기에 있어서는, 전기파를 발생시키는 전기파 발생부와 접착 패드가 분리되어 있어 휴

대가 간편하지 않을 뿐만 아니라 접착력이 있는 물질과 젤 등을 신체에 도포하여 사용하여야 하므로, 특히 머리 카락이 있는 머릿부분 이외에 털이 있는 신체 부위에 접착 패드를 부착하는 것이 곤란하므로 간편하게 사용할 수 없는 문제점이 있다. 즉, 신체의 특정 부위를 사용하는 데 있어 제약이 따르는 문제점이 있다.

[0048] 따라서, 본 발명의 목적은, 휴대가 간편하며, 신체의 모든 부위에 간편하게 사용할 수 있는 전기파 치료기를 제공하는 것이다.

[0049] 또한, 본 발명의 다른 목적은, 근육을 이완시키고 혈액순환을 촉진시켜 인체의 건강을 증진시킬 수 있는 전기파 치료기를 제공하는 것이며 전원 또는 충전전지를 전원으로 사용하여 미세전류 발생장치로부터 발생된 미세 전기파를 이용하여 인체를 자극하여 통증완화와 치료효과를 증진할 수 있는 전기 자극 침체가 인설된 기능성 침체에 관한 것이다.

[0050] 본원의 다수의 침이 식립된 침체는 크게 2가지 작용에 의해서 피부의 문제점들이 해결되는데 하나는 침의 피부 자극에 의해 문제부위에 자가치유능력을 이끌어내기 위해 병원에서는 롤러를 1주에 한번 또는 1달에 두 번 사용하고 가정에서는 매일 또는 주2회 마사지하듯 가볍게 사용하게 되고 이로 이해 탈모, 흉터, 주름, 여드름자국, 색소, 모공, 대머리, 튼 살 및 피부재생능력이 감소하여 동반되는 피부 문제점들을 자연적인 방법으로 어느 정도 해결하게 된다.

[0051] 또 하나는 상기의 피부문제를 치료해줄 약물을 함께 사용하여 피부 각질층에만 발려있던 주요성분(펩티드)들을 피부가 요구하는 깊이 층까지 다수의 침을 이용해 기공을 만들어 신속하게 넣어주는 작용으로 아무리 고가의 화장품 또는 발모 성분들일지라도 피부 인체표피층이나 각질층에만 발라지는 효과가 있었다면 상기 침은 피부 필요 물질을 전기파와 함께 직접 피부 깊숙이 넣어주어 그 효과를 극대화하는 방법으로 미세한 침으로 인체의 피부 면을 자극하여 콜라겐 합성과 흉터 회복을 촉진시켜 주며 동통을 완화해주는 기법을 말한다.

[0052] 또한, 종래의 예리한 다량의 침이 식립된 롤러용 침체는 고가이다 보니 대부분의 사용자가 하나를 구입하여 사용하며 이를 여러 사람이 공동으로 사용하기도 하는데 상기의 롤러를 피부에 사용하다 보면 인체의 방어기전의 원리로 외부 침투 물질로부터 피부가 저항하는 인체 표피층과의 충격이나 피부의 마찰 또는 사용중 주위의 물리적인 충격으로 상기 침 끝이 휘거나 마모되는 문제점이 발생하였으며; 특히 상기의 롤러 침을 장기간에 걸쳐서 사용하다 보면 상기의 롤러 침을 가정에서 제아무리 살균이나 소독을 한다 하여도 상기의 롤러 침의 사용시에 접촉되는 인체의 혈 은이나 분비물과 고름 등이 묻게 되어 타인 사용시에는 자칫하다가는 교차 감염이나 포도상구균과 간염 더 나아가 AIDS 같은 무서운 전염성 병원균에 노출이나 감염될 수 있는 문제점이 대두하였고 결국에는 이를 해결하려면 상기 침체 전체를 교환하는 고 비용의 지출과 경제적 손실이 발생하였다.

[0053] 본원 발명은 상기와 같은 여러 문제점을 보완하여 사용중 침 끝이 마모나 파손된 침이 식립된 침체를 간편하게 분리하고 상기의 새로운 침체를 간단하게 부착하여 새로운 침과 인체의 생리적 메커니즘에 대응하는 주파수, 전압 등의 물리량을 더욱 정밀하게 설정하는데 더하여, 파형의 동적 변화에 대해서도 최적의 설정을 행하여, 통증을 완화하고 제거하는 치료 효과를 보다 높일 수 있는 전기 자극 침체를 제공하는 데 있다.

[0054] 또, 본 발명의 다른 목적은, 종래의 전기 치료기에 비하여, 특히, 대폭적인 추가 부품이나 구조적 변경을 동반하는 일 없이 용이하게 실시할 수 있고, 저 비용화 및 소형 콤팩트 화에 기여할 수 있는 전기 자극의 기능을 갖는 기능성 침체를 제공하는 데 있다.

## 과제 해결수단

[0055] 상기 목적을 달성하기 위해, 본 발명의 전기파 자극기가 인설된 침체에는 출력 트랜스포머의 코일로부터 스파이크 펄스를 출력하는 스파이크 펄스 발생 회로부와 손으로 쥘 수 있는 손잡이부와 이 손잡이부의 내부에 상기 전기 자극장치를 설치하게 된다.

[0056] 또한, 스파이크 펄스 발생 회로로부터 출력하는 스파이크 펄스가 제공되는 한쪽의 전극이 되는 복수의 침 도전체를 갖는 양전극부 및 상기 스파이크 펄스가 제공되는 다른 쪽의 전극이 되는 음 전극부를 구비하여 이루어진 전기파 치료기를 구성할 때에, 스파이크 펄스의 주파수를 바람직하게는 9.0±0.2Hz, 펄스 폭을 100~800㎲ 중 선택된 어느 하나의 상태로 설정하는 동시에, 인체의 부하 저항에 대응하는 10~400KΩ 부하로 인가하는 스파이크 펄스의 펄스 폭 기간의 앙의 피크 바람직하게는 전압치가 1.5V~100V가 되고, 또한 펄스 폭 기간에서 앙의 전압이 소정 전압치 이상을 유지하도록, 출력 트랜스포머의 코일의 감은 수의 비를 설정하여 이루어지는 것을 특징으로 한다.

[0057] 본원의 침체와 연통되어 전기파를 공급하는 제어부 몸체 및 전기 자극 침체부 내에 삽설된 전기파 자극기는 인

체에 부착되는 패드 사용이 없이 전원을 통하여 발생시킨 전기파 펄스를 침체에 공급함으로써 인체 시술시에 통증 완화와 더불어서 주무름, 두드림, 진동효과 등의 전기적인 자극을 가하는데 목적이 있는 것이다.

## 효 과

[0058] 이상, 설명한 바와 같이, 본 발명에 따른 전기 자극 침체가 부착된 침체에 의하면, 종래의 침이 식립된 롤러용 침체는 분해 및 착탈이 안 되는 단 일체이고 일체형이다 보니 분업이 어려워 제조공정이 까다롭고 구입비용이 고가이다 보니 대부분의 사용자가 하나를 구입하여 사용하고 고장시나 침의 마모시는 전체를 폐기해야하는 문제점으로 특히 상기의 롤러를 피부에 사용하다 보면 인체의 방어기전의 원리로 외부 침투 물질로부터 피부가 저항하는 인체 인체표피층과의 충격이나 피부의 마찰 또는 사용중 주위의 물리적인 충격으로 상기 침 끝이 휘거나 마모되는 문제점이 발생하였으며; 특히 상기의 롤러 침을 장기간에 걸쳐서 사용하다 보면 상기의 롤러 침을 가정에서 제아무리 살균이나 소독을 한다 하여도 상기의 롤러 침의 사용시에 접촉되는 인체의 혈액이나 분비물과 고름 등이 묻게 되어 자칫하다가는 교차 감염이 발생할 수 있는 문제점이 대두하였고 결국에는 이를 해결하려면 상기 침체 전체를 교환하는 비용지출과 경제적 손실이 발생하였다.

[0059] 또한, 종래의 전기파 치료기에 있어서는, 전기파를 발생시키는 전기파 발생부와 접촉 패드가 분리되어 있어 휴대가 간편하지 않을 뿐만 아니라 접착력이 있는 물질과 젤 등을 신체에 도포하여 사용하여야 하므로, 특히 머리카락이 있는 머릿부분 이외에 털이 있는 신체 부위에 접착 패드를 부착하는 것이 곤란하므로 간편하게 사용할 수 없는 문제점이 있었고 "즉" 신체의 특정 부위를 사용하는 데 있어 제약이 따르는 문제점이 있다.

[0060] 본원 발명은 상기와 같은 문제점을 보완하여 사용중 침 끝이 마모나 파손된 침이 식립된 침체를 간편하게 분리하고 상기의 새로운 침체를 간단하게 부착하여 새로운 침으로 고통 없이 효과 있게 시술하는데 그 목적과 효과가 있는 것이다.

[0061] 또한, 본 발명의 전기적인 펄스에 의해, 인체의 생리적 메커니즘에 대응하는 주파수, 전압 등의 물리량을 더욱 정밀하게 설정하는데 더하여, 파형의 동적 변화에 대해서도 최적의 설정을 행하여, 통증을 완화하고 제거하는 치료 효과를 보다 높일 수 있다.

[0062] 이와 같이 본 발명은 다수 개의 침체로 인체의 피부에 구멍을 내고 이와 동시에 약물을 주입함으로써, 시술시간을 줄일 수 있고, 시술시 통증을 최소화할 수 있으며, 약물의 침투 효과를 높일 수 있는 저렴한 비용으로 다중 천공 시술 및 메조테라피 시술할 수 있는 장점이 있으며 깊은 부위의 시술이 가능하여 부위별 시술 또한 가능한 장점이 있다.

[0063] 또한, 본 발명의 다른 목적은, 근육을 이완시키고 혈액순환을 촉진시켜 인체의 건강을 증진시킬 수 있는 전기파 치료기를 제공하는 것이다.

## 발명의 실시를 위한 구체적인 내용

[0064] 본원발명은 피부 표피에 사용하여 기공을 형성하고 여기에 더불어서 전기 자극이 되는 기능성 침체에 관한 것으로, 더욱 상세하게는 피부조직의 효과적인 치료 및 재생을 위한 전기파 자극기가 부착된 침체에 관한 것이다.

[0065] 다양한 전기파로 이루어진 전기 자극 침체가 인설된 침체는 한의학에 주로 사용하는 다양한 침을 원통형 또는 라운드 및 다각형 형태의 롤러나 일정형상의 침체에 삽입하고 여기에 소정의 전기파를 인가시켜 피부보호, 노화방지 등을 위한 피부를 관리함에 있어 시술하는 침체에 미세전류 발생장치로부터 발생된 미세전류인 전기파를 이용하여 인체를 자극하여 통증완화와 치료효과를 증진할 수 있는 전기 자극 침체부(300)가 인설된 침체에 관한 것이다.

[0066] 본원발명에서 사용하는 전기자극 요법은 전기자극 원리 중에서 MPS 초미세전류 자극(Microcurrent Pulse Stimulation)이라는 전기파 자극 요법으로 인체의 자극 부위에 패드를 사용하지 않고 다양한 전극으로 미세한 생체전류를 흘려서 신경과 근육의 활동을 자극하는 원리이다.

[0067] 이는 주기적인 펄스를 가하여 침처럼 깊숙이 꼽히는 느낌의 자극을 주는 것으로 자극의 강도는 종래의 침술요법보다 월등한 효과를 제공하며 이 요법은 생체전류를 기본으로 한 서양의학과 동양의학인 침과 뜸의 원리에 대한 한의학이 결합한 것이다.

[0068] 전기요법은 인체에 미세한 전기파를 통하게 하여 그 자극으로 근육을 직접 마사지하고, 신경을 진정시키고 혈행을 촉진시켜 결림 등에 의한 급성 및 만성 통증 등의 완화, 회복을 도와주는 물리치료 요법으로 근육의 수축운동을 일으켜서 신체 기능의 쇠약이나 비만, 질병을 치료하기도 하며 진동(Hz-1초당 진동수)을 시켜 신경 진정

작용, 근육질환치료, 혈액순환촉진, 마사지, 지방세포 축소 효과로 나눌 수 있는 것이다.

[0069] 이하, 본 발명의 구성을 첨부된 도면을 참조하여 상세하게 설명하면 다음과 같고 아래에서는 본 발명을 설명함에 있어, 관련된 공지 기능 또는 구성에 대한 구체적인 설명이 본 발명의 요지를 복잡하게 하거나 불필요하게 흐릴 수 있다고 판단되는 경우에는 그 상세한 설명은 생략할 것이다.

[0070] 도 1은 종래의 전기 자극 침체의 일실시 예를 나타낸 사시도를 나타낸 것으로 손가락에 전극을 연결하고 목 부위에 전기자극을 기능성 침체를 사시도로 나타낸 것이다.

[0071] 도 2는 본원 발명의 기능성 침체에 있어 침체의 일실시 예를 나타낸 사시도로서 이를 참조하면, 본 발명에 따른 전기 자극 침체의 구성으로는 전기 자극 침체 몸체(20)와 전기파 발생부(40)에는 사용자가 파지하는 손잡이부(60) 및 침체부(300)를 포함하며 이를 상세하게 설명하면 다음과 같다.

[0072] 여기서, 전기파 발생부(40)에는 전기발생 장치로부터의 연결 케이블(260)을 통한 연결 단자(280)가 삽입되며, 전기 자극 침체를 이용한 시술에 필요한 전기가 상기 전기 발생장치로부터 연결단자(280)를 통해 전기 입력부로 입력된다.

[0073] 한편, 손잡이부(60)는 시술자가 본 발명에 따른 전기 자극 침체로 환자에게 시술을 하는 경우에 손으로 잡는 부분으로 손잡이 상부 케이스(80)와 하부케이스(100)로 이루어지며 상기 제어부 몸체(120)에는 전기파 발생부(40)와 이를 작동하는 작동 스위치(160)와 조절 스위치(180)와 표시부(200)와 압축기 등을 통한 에어 발생기(20)와 이를 상기 전기 자극 침체 몸체(20)로 연결하여주는 에어 분출구(220)가 제어부 몸체(120)에 인설되게 된다.

[0074] 또한, 침체부(300)는 시술자가 직접 가압을 하는 부분으로 다수의 예리한 침들이 침삽입홀(360)에 식립 되어 있으며 침체 탈부착부(340)에 의하여 상기 침체부(300)가 자유롭게 탈부착이 되는 것이다.

[0075] 여기서, 상기 침체부(300)는 형성된 전도성 금속소재로 이루어진 침 삽입홀(360)에 삽입되어 고정되어 있으며, 침체부(300)를 기준으로 일정한 길이만큼 돌출되어 있다.

[0076] 이러한 침체는 시술자에 의해 피부 진피층에 삽입된 상태에서 피부조직에 자극 및 소정 전기파의 전기파 자극을 가하게 된다.

[0077] 한편, 본 발명에 따른 전기 자극 침체의 제어부 몸체(120)에는 시술의 용이성을 확보하기 위한 탄성 절편이 적어도 하나 이상 형성되어 있는 것이 바람직하며 제어부 몸체(120)에 삽입된 탄성 절편에는 탄성 특성이 우수한 고무 절편이 사용될 수도 있고, 기타 판형 스프링 등이 사용될 수도 있으며 바람직하게는 시술 용도에 따라 제어부 몸체(120)에 무탄성 절편을 삽입할 수도 있을 것이다.

[0078] 또한, 제어부 몸체(120)에 삽입된 탄성 절편은 예리한 침체가 시술부위의 진피층으로 부드럽게 삽입되어 자극 및 소정 전기파의 진동 자극을 가하도록 하는 기능을 하게 되며 바람직하게는 침의 상태를 자력이 발생하는 자석으로 하여 자기장의 효과까지 볼 수 있게 할 수도 있다.

[0079] 또한, 본 발명에 따른 전기 자극 침체의 침체부(300)는 원통형 또는 타원형 및 다각형 등의 다양한 형상을 하고 있으며, 그 내부 또는 외부에는 다수의 전도성 금속 소재로 이루어진 침 삽입홀(360)이 형성되며 침체가 탈부착되는 침체 탈 부착부(340)가 구성되며 시술부위에 미세상처를 내기 위한 예리한 침체가 삽입되어 고정된다.

[0080] 다만, 본 발명을 실시함에 있어서,침체부(300)에 형성된 전도성 금속소재로 이루어진 침 삽입홀(360)의 개수 및 간격은 시술목적에 따라 적절하게 조정될 수 있을 것이다.

[0081] 또한, 상기 전기파 발생부(40)는 조절 스위치(180)에 인설 되는데 전원(140)을 개폐하는 전원 버튼과 전기파 전류의 강약을 단계적으로 증감, 조절하는 기능이 구성된 작동 스위치(160)와 라디오파, 초음파, 고주파, 중주파, 및 저주파 등의 전기 자극을 선택하여 출력하는 모드 선택 스위치(240)와 전원 버튼의 ON/OFF상태와 현재의 작동 상태를 알리는 램프가 구성된 표시부(200)로 이루어진 것을 사시도로 나타낸 것으로 상기의 전기 자극 침체, 헤드에 결합하고 전기파 발진회로기판(PCB)의 출력단에 단자로 연결된 도전판과, 침체부(300)와 결합 및 해체되고 도전판에 각기 연결된 다수의 전극으로 구성된다.

[0082] 본 발명의 전기 자극 침체는 전기파 발생부(40) 및 타이머 등이 상기 제어부 몸체(120) 내부에 설치되고, 조작 패널이 외부에 설치된 제어부 몸체(120)가 구비된다.

[0083] 여기서 상기 본체의 상부 면에는 상기 본체의 내측 공간부와 연통 됨과 동시에 상기 조작 패널에 연결되는 연결

케이블(260)이 내측에 배선되어 구비된다.

[0084] 아울러 상기의 조작 패널에 구비된 조작버튼과의 상호 연결을 알리는 숫자 또는 기호 등이 표시된 표시부가 형성된다.

[0085] 또한, 침체 부(300)에 끼워지는 접속부가 구비되어 상기 본체에서 발생하는 전기파를 침으로 전달하는 연결 케이블(260)이 더 구비된다.

[0086] 아울러, 상기 체결 부재에는 바람직하게는 나사 결합되는 커버 부재가 구비되며, 상기 커버 부재는 하부가 개방된 연질의 용기 형상으로 형성되고, 외주 면에 내측과 연통 되는 관통구멍이 형성되며, 상부에는 상기 체결 부재에 나사 결합하도록 나사 산이 형성된다.

[0087] 또한, 상기 커버부는 상기 접속부가 형성된 타측 끝단 부에서 약간 이격되게 하여 외측에 나사 산이 형성되어 손으로 이를 회동하여 체결 부재가 작동되는 것도 바람직하다.

[0088] 또한, 상기 연결 케이블(260)의 끝단 부에는 시술된 침에 연결하는 연결 단자(280)가 구비되며, 상기 체결 부재와 연결 단자(280)의 사이에 연결 케이블(260)이 구비되고, 그리고, 상기 연결 단자(280)는 하부가 개방되게 내측에 삽입공이 형성되고, 외주면 상단의 소정 위치에는 버튼 공이 형성되며, 상부 면에는 상기 연결 케이블(260)이 연결 결합하는 연결단자(280)가 구비되는 것이다.

[0089] 여기서, 상기 몸체의 삽입공에는 고정구가 형성된 고정체가 내주 면에 고정되고, 상기 고정체의 타측부에 대응되는 유동체가 구비되며, 상기 유동체는 상기 고정구에 힌지결합되고, 상기 고정체의 하부와 접촉된 상태를 유지하도록 힌지 결합부에 탄성 부재가 구비되며, 상기 유동체의 상부에는 상기 버튼 공에 체결되어 상기 유동체의 상부를 밀어주어 하부가 고정 체로부터 이탈되어 벌어지도록 하는 버튼이 구비된다.

[0090] 이렇게 상기 커버 부재를 피부에 고정한 후에 연결 케이블(260)의 접속부를 상기 제어부 몸체(120)의 포트에 끼운 후 본체의 조작패널의 작동스위치(160)와 조절스위치(180)를 조작하게 되면 상기 연결 케이블(260)을 통하여 전기파가 침체부(300)의 구비된 침으로 전달되게 되며 인체의 표피에 전달되게 된다.

[0091] 이때, 상기 커버 부재는 연결 케이블(260)의 체결 부재에 나사 결합 되어 있는 것으로, 사용자의 선택에 따라 커버 부재는 체결 부재에 나사 결합시켜 사용할 수도 있고, 체결 부재로부터 커버 부재를 완전히 분리시켜 제거하여 바람직하게 사용될 수도 있다.

[0092] 상기와 같은 동일한 방법에 의해 다수 개가 시술된 침에 연결 케이블(260)을 연결시켜 전기파를 인가시키게 된다.

[0093] 따라서, 전기파를 침으로 인가시켜줌으로써, 시술자의 피부에 목적하는 시술하게 되어 소정의 치료 효과를 얻을 수 있게 됨으로써, 피부 보호와 피부가 노화되는 것을 방지 등 피부를 건강하게 관리할 수 있게 된다.

[0094] 도 3은 본원 발명의 기능성 침체에 있어 침체의 또 다른 일실시 예를 나타낸 사시도.

[0095] 도 4는 본원 발명의 기능성 침체에 있어 침체와 구동부재의 일실시 예를 나타낸 사시도로서, 본원의 전기 자극 침체 몸체 (20)에는 전기파가 발생하는 전기파 발생부(40)와 사용시 사용자가 파지하는 손잡이부(60)와 상기 손잡이를 개폐하는 손잡이 상부케이스(80)와 손잡이 하부 케이스(100)가 구성된다.

[0096] 한편, 제어부 몸체(120)에는 전원(140)이 입력되는 전원부와 상기 전기 자극 침체 몸체 (20)를 동작하는 작동스위치(160)와 이를 조절하는 조절스위치(180)가 형성된다.

[0097] 또한, 상기 제어부 몸체(120)에는 기기의 작동을 사용자가 유관으로 파악할 수 있는 표시부(200)가 구성되며 기기의 강약이나 시간을 조절하는 모드 선택스위치(240)가 구성되게 된다.

[0098] 제어부 몸체(120)에는 소형 압축기가 인설되어 압축공기를 에어 분출구(220)를 통하여 전기 자극 침체 몸체(20)에 전달하여 상기 침체부(300)가 상하로 유동하거나 회전하게 되는 것이다.

[0099] 한편, 전기 자극 침체 몸체 (20)에는 연결 케이블(260)이 연결단자(280)로 연결되어 침체부(300)가 구동하게 되며 상기 침체부(300)에는 침이 식립되는 침 삽입 홀(360)과 다수의 침을 일정형상의 침체에 고정하는 침체 고정부재(320)와 상기 침체부(300)를 손잡이(60)에서 탈부착하는 침체 탈 부착부(340)가 구성되게 된다.

[0100] 또한, 상기 전기 자극 침체 몸체 (20)의 상부에는 상기 침체부(300)를 유동하는 크랭크 부(380)와 캠부(400)를 구비하는 침체 구동 부재(420)가 인설되어 상기 침체부(300)를 회전 또는 왕복 작용을 하여 표피에 천공을 하게

되는 것을 사시도로 나타낸 것이다.

[0101] 상기한 목적을 달성하기 위한 본 발명에 따르면, 케이스 내부에 전원을 공급하는 전원(140) 및 상기에서 공급되는 전원을 미세 직류전류로 변환시키는 전기파 발생부(40)가 구비되며, 케이스 외부로 상기에서 전기파 발생부(40)로 공급되는 전원을 제어할 수 있는 스위치를 비롯한 버튼과 상기 본체와 적어도 하나의 패치가 전기적으로 연결되어 케이스의 일면을 통해 외부로 돌출되며, 상기 패치의 중심에 이마나 얼굴을 미세전류로 자극할 수 있는 것을 특징으로 하는 미세전류 자극기를 제공하는 데 있다.

[0102] 한편, 본 발명에 따른 전기 자극 침체는 표면에 다수개의 침체가 삽입된 상기

[0103] 침체부(300)를 피시술자의 피부 상에서 가압할 수 있도록, 침체부(300)에 결합하는 손잡이(60)부에 결합하며, 제어부 몸체(120)에는 다수개의 침체에 전기파가 상기 침체부(300)에 통전 되도록 전기파 발생 장치로부터의 연결단자와 접속되는 전기파 입력부를 구비한다.

[0104] 본 발명에 따르면, 다수개의 예리한 침체를 통하여 인체의 피부면에 이온, 라디오파, 초음파, 고주파, 중주파, 및 저주파 중 선택된 어느 하나의 전기 자극을 가함으로써, 피부조직의 효과적인 치료 및 재생할 수 있게 된다.

[0105] 피부조직의 노화, 흉터, 여드름 자국 등을 개선하기 위한 방법으로서, 종래에는 단순히 피부치료 및 재생을 위한 용액, 크림, 젤, 연고제 등의 의약품을 단순히 피부에 도포하는 방식에 의한 치료만이 이루어졌으나 상기 약재의 침투비율의 양은 상대적으로 그 비율이 매우 작으며, 그 결과 효과적인 피부조직의 개선을 위한 치료가 이루어지지 않는다는 문제점이 있었으며 피부조직의 효과적인 치료 및 재생을 위한 침체부(300)를 제공함에 있다.

[0106] 상기 목적을 달성하기 위한 본 발명에 따른 전기 자극 침체는, 표면에 다수개의 침체가 삽입된 침체부(300)와 상기 침체부(300) 피시술자의 피부 상에서 가압할 수 있도록, 상기 침체부(300)에 결합하는 손잡이부(60), 및 상기 손잡이부(60)에 결합하며, 상기 다수개의 침체에 전기파가 통전 되도록 상기 제어부 몸체(120)에는 전기파 발생부(40)로부터의 연결단자와 접속되는 전기파 입력부를 포함한다.

[0107] 또한, 바람직하게는, 상기 다수개의 침체의 끝에는 상기 전기파 발생 장치에 의해 이온, 라디오파, 초음파, 고주파, 중주파, 및 저주파 중 선택된 어느 하나의 전기파가 발생하는 것을 특징으로 한다.

[0108] 또한, 본 발명은 침체만 별도로 휴대용으로 사용할 수 있는 전기 자극 침체에 관한 것으로, 제어부 몸체(120)에 전기파 발생부(40)를 갖는 전기파를 제어하는 조절 스위치(180)를 구비하고, 손잡이부(60) 일단에 침체부(300)를 형성하며, 상기 침체부(300) 에는 상호 이격되고 전기파 발생부(40)의 양측 출력단에 단자로 연결된 도전판과, 상기 침체부(300) 외면에 결합하고 도전판에 각기 접속된 다수의 전극을 구비한 것으로, 사용이 편리한 것은 물론, 안면을 비롯한 피부 마사지시나 피부 자극시 전기파에 의해 피부의 혈행을 촉진함과 동시에 피부조직을 부드럽고 탄력 있게 개선하며, 또한 안면의 질환이나 문제성 피부를 개선할 수 있도록 된 것이다.

[0109] 일반적으로 피부조직은 최외층인 인체 표피로부터 진피, 피하조직으로 이루어져 있으며, 인체 표피와 진피층에는 모낭공을 포함하는 피지선과 땀구멍이 형성되어 있어 과다하게 분비되는 피지선과 땀으로 인하여 피부를 오염시키기 쉽다.

[0110] 사람의 몸은 60%가량이 수분으로 이루어져 있음과 아울러 물과 전해질(電解質)로 생긴 조직체이다.

[0111] 몸에 전기가 통한다는 것은 체내에서 전해질 이온의 이동에 의해 전기파가 흐르기 때문이며, 이러한 현상을 이용하여 피부에 전기자극을 준다는 것은 전류의 이동에 의해 신체조직에 흥분이 일어나는 것으로 표현할 수 있다.

[0112] 이때의 흥분이란 이온(전기)을 지닌 분자가 원자의 전극 밑에 모이기도 하고 흩어지기도 하는 현상이다. 전기파를 이용한 치료요법은 이러한 생체의 전기 에너지를 이용한 것으로 전류자극을 가하여 흥분을 일으키기 위해서는 전류의 강도(전압의 높이)를 결정하는 통전량, 통전시간과 주파수를 결정하는 전류작용시간 및 전압의 변화를 결정하는 파형(wave form)을 주로 고려해야 한다.

[0113] 사람의 피부는 절연상태에 가깝게 되어 있어 쉽게 전기를 통하지는 않으나, 어느 정도 전압을 높여가면 전류가 피부조직을 통해 흐르기 시작하며, 이 상태에서 더욱 높은 전압으로 자극을 주면 많은 이온이 함께 움직이면서 흥분을 증가시킨다.

[0114] 그러나 높은 전압이라도 단시간에 작용한다면 자극이 되지 않으므로, 자극은 일정시간 이상 유지되어야 하며, 전류의 자극효과는 전압에 따라 달라진다.

[0115] 즉, 전압이 높으면 통전시간은 비교적 짧아도 좋으나, 전압이 낮으면 통전시간은 길어도 체내의 흥분작용은 발생하지 않는다.

[0116] 피부에 자극작용은 전류의 변화하는 속도에 따라 크게 달라지는데, 전류변화가 완만하면 자극작용이 적어지고, 반대로 전류변화가 급속하면 자극작용도 강하게 일어나며 인체에는 또한 어느 정도의 전류가 흐르면 역으로 기전력이 발생하여 전류의 유입을 차단하려 하는 분극 작용이 있으며, 이러한 분극 작용을 방지하면서 체내의 흥분작용을 일으키기 위해서는 전압의 적합한 변화 즉, 파형 값을 정확히 산출해야 한다.

[0117] 주지된 바와 같이 전기파는 경혈 마사지로 자극을 줌과 동시에 혈행을 촉진하고, 영양크림 또는 팩 등과 함께 이용할 경우 체내의 대사개선과 다양한 피부 마사지효과를 얻을 수 있으며, 안면의 기미, 검버섯, 주름, 여드름, 주근깨 등 각종 피부질환의 완화, 예방 및 개선에 주로 이용되고 있다.

[0118] 그러나 전기파를 이용한 종래의 시스템은 장치의 규모가 크고 구조가 복잡하고 패드를 사용하여야 한다는 단점이 있었다.

[0119] 본 발명의 또 다른 목적은, 매우 저렴한 비용으로 전기파에 의한 높은 효과를 얻을 수 있는 전기파 침체부(300)를 제공함에 있다.

[0120] 본 발명은 상기의 제반 목적을 달성하기 위하여, 제어부 몸체(120) 내부에 전기파 발생부(40)를 구비하고, 손잡이부(60) 일단부와 탈부착 되는 상기 침체부(300)를 형성하며, 상기 침체부(300)에 상기 전기파 발생부(40)로부터 발진된 전기파 펄스가 인가 되도록 전기파를 전달할 수 있는 상기 침체부(300)를 구비한다.

[0121] 또한, 전기파 발생부(40)에는 본체에서 발생하는 전기파를 제어하는 제어부를 포함시켜 전원의 개폐 및 전류, 전압의 가변에 의한 펄스의 주기의 조정 또는 펄스의 강도 등을 조정할 수 있도록 구성한다.

[0122] 손잡이부(60)는 손으로 충분히 파지할 수 있는 길이로 하고, 헤드는 손잡이부(60)로부터 둔각으로 형성하되, 각도범위가 지나치게 증가하지 않도록 하는 것이 바람직하다.

[0123] 또한, 전기파 발생부(40)에는 전기파 조절 스위치(180)를 포함시켜 전원의 개폐 및 전류, 전압의 가변에 의한 펄스의 주기조정 또는 펄스의 강도 등을 조정할 수 있도록 구성한다.

[0124] 상기 전기파 발생부(40)는, 바람직하게는 제어부 몸체(120)에 형성된 가이드 리브 및 그 가이드 리브에 결합한 전기파 발진회로기판(PCB)과, 가이드 리브에 형성된 걸림 후크 및 전기파 발진회로기판(PCB)과 이격되도록 걸림 호크를 통해 가이드 리브에 탄력적으로 결합되게 구성한다.

[0125] 상기 전기파 조절 스위치(180)는 상기 제어부 몸체(120)에 내설된 상기 전기파 발진회로기판(PCB)에 연결되어 전원을 개폐하는 전원 버튼과 전기파 전류의 강약을 단계적으로 증감, 조절하는 주파수 조정버튼으로 이루어지며 상기 전원 버튼의 ON/OFF 상태에서 점등 및 소등 상태를 유지하는 램프로 구성한다.

[0126] 또한, 상기 전원 버튼과  주파수 조정버튼은 손잡이부(60)를 통해 돌출되어 조작할 수도 있으며 상기 버튼의 안내를 위한 커버를 손잡이부(60)에 결합한다.

[0127] 상기 전기 자극 침체는 침체부(300)의 내부 또는 외부에 상호 이격 하여 결합하고 전기파 발진 회로기판의 양측 출력단에 단자로 연결된 도전판과, 침체부(300)로부터 결합하고 도전판에 각기 접속, 연결된 다수의 전극으로 구성한다.

[0128] 즉, 전원 버튼이 ON 되면, 전원(140)으로부터 전기파 발생부(40) 및 전기파 조절 스위치(180)에 전원이 공급되고, 상기 전기파 발생 부로부터 발생하는 전기파 펄스가 단자를 통해 침체부(300)의 도전판에 인가되며, 도전판에 접속된 플러스 및 마이너스 침체가 피부에 접촉되면서 피하조직에 전기파 전류를 흘림과 동시에 전류의 흐름에 의해 인체 표피, 진피, 피하지방층의 이온 분자를 유동시켜 흥분작용을 일으키거나 진통, 진정작용을 행하게 된다.

[0129] 여기서 피부조직에 통증 또는 여드름 등이나 염증이 있을 경우에는 주파수 범위를 낮게 설정하고, 통증이 없을 때는 전기파의 주파수 범위를 상대적으로 높이는 것이 바람직하다.

[0130] 또한, 전기 자극 침체의 최초 사용시는 비교적 낮은 단계의 전기파 전류를 공급하고 점차 전류의 강도를 높여가는 것이 바람직하다.

[0131] 본원에서 사용되는  전기파라 함은 초장파, 초자장, 음전위, 고주파, 저주파, 중주파 등 인체에 유익한 모든 주파수를 포함하며 상기 전기파 중에서 바람직하게 선택하여 사용되는 것이다.

[0132] 또한, 전도성 금속소재로 이루어진 침 삽입홀(360)이 구성되어 다수의 침체가 각기 상부에 돌출되도록 설치되는 몸체와; 침체 일측에 전기파를 발생시키기 위한 전기파 발생부(40)와; 상기 침체 일측에 있는 전기파 발생부(40)를 통해 치료받고자 하는 표피에 침체부(300)를 통하여 전달되는 전기파의 강, 중, 약을 설정하고 전기파의 종류 등을 설정할 수 있는 전기파 설정 조절 스위치(180)와; 상기 전기파 설정조절 스위치(180)와 표시부와; 전기파의 강, 중, 약 및 전기파 종류 등을 컨트롤러부터 제어하여 전기파 발생부(40)를 통해 발생시키게 하는 컨트롤러; 그리고, 상기 컨트롤러의 작동을 제어하는 작동스위치를 구비하는 것을 특징으로 한다.

[0133] 또한, 침체부(300) 에 식립된 침체의 일측에는 각기(+)와(-)가 맞게 장착되어 사용자가 희망하는 전기파를 상기 조절 스위치(180)의 컨트롤러에서 제어하여 상기 침체부(300)에 식립된 침체에 치료용 전기파를 전달하는데 이때 사용자가 치료에 상기 침체에 사용자의 피부가 닿게 된다.

[0134] 이때 상기 침체의 일측에 장착된 전기 자극 침체로부터 상기 컨트롤러가 제어한 전기파를 발생시켜 침체와 닿은 표피에 작용시킴으로써 침체에 식립된 침체를 통해 환부에 전기파를 전달하여 전기파 치료가 가능하도록 한다.

[0135] 또한, 상기 몸체 내부에 구성된 전기파 발생부(40)를 통하여 침체가 사용자의 두피나 피부 등에 닿지 않아도 전기파가 두피나 피부 등에 작용할 수 있는 전기파가 있는데 이때의 대표적인 주파수는 초자장이나 초장파이다.

[0136] 한편, 상기 전기 자극 침체가 상기 몸체 내부에 장착되고 사용자가 희망하는 초자장이나 초장파를 상기 컨트롤러에서 제어하여 전기파 발생부(40)를 통해 발생하게 하는데 이때 사용자가 치료에 상기 침체를 통하여 치료 주파수를 두피나 피부 등에 작용시키지 아니하여도 상기 몸체 내부의 전기파 발생부(40)를 통해 발생된 초 자장이나 초장파의 영역에 사용자의 피부나 두피 등이 들어오게 되면 상기 피부나 안면, 두피 등에 작용하게 됨으로써 전기파를 통한 치료가 가능하도록 된다.

[0137] 일례로는 상기 몸체에 내설되는 전원(140)로 구성되며, 상기 전원 공급부 출력단은 전원스위치 및 전자 장치 등을 차례로 경유하여 상기 각 전기 자극 침체에 (+)와(-)로 접속된다. 즉, 상기 전원 스위치가 온 스위칭 되는 동안에만 상기 전기 자극 침체에 전원 공급부의 전압이 컨트롤러의 명령에 따라 공급되도록 구성되는 것이다.

[0138] 이때 전기 자극 침체의 작동방법 중에 각 전자장치가 없이 전원스위치에 의하여 전원공급 부에서 바로 전기 자극 침체로 전압을 인가하여 작동할 수 있음은 물론이다.

[0139] 그리고 상기 전원스위치의 작동과 동시에 상기 발광램프를 설치하고, 상기 전원스위치의 작동과 동시에 상기 발광램프가 점등되도록 구성함으로써, 사용자가 전원스위치가 온 스위칭 된 상태임을 용이하게 확인할 수 있도록 구성하는 것이 바람직할 것이다.

[0140] 상기 컨트롤러는, 상기 전기파 조절 스위치(180)에 의해 사용자가 시술자의 신체조건에 따라 치료 주파수 세기 및 전기파의 종류를 설정하여 작동스위치를 누르면 전기파가 전기 자극 침체에 의해 침체로 전달되어 전기파의 종류를 제어하여 치료파 발생기에 전기파가 발생하게 하는 역할도 하게 된다 그리고, 상기 작동스위치(160)를 상기 컨트롤러의 작동 여부를 제어하기 위하여 상기 몸체 일측에 설치되며, 상기 조절 스위치(180)에 위치한 컨트롤러에 연결된다.

[0141] 또한, 상기 몸체 일측에는 상기 컨트롤러에 각기 전기적으로 연결되는 시간조정부와 시간표시부가 구비될 수 있는데 상기 시간조정부에는 바람직하게는 10분 단위버튼, 1분 단위버튼 및 시작과 정지버튼이 구비되며, 상기 10분 단위버튼 및 1분 단위 버튼이 작동됨에 따라 10분씩 또는 1~5분씩 증가한 시간이 상기 시간표시부에 설정되도록 구성된다.

[0142] 그리고 상기 시작과 정지버튼이 한번 눌러지면 상기 시간표시부에 설정된 시간이 카운트 다운되어 감소하며, 상기 시작과 정지버튼이 두 번째 눌러지면 상기 타임표시부에 설정된 시간이 제로로 리셋 되도록 구성된다.

[0143] 더불어, 상기 시간조정부에 설정된 시간이 카운트 다운되어 제로에 도달하게 되면, 이를 감지한 상기 컨트롤러에서 오프 시킴으로써, 상기 전원 공급부(Vcc)로부터 상기 각 전기파 조절 스위치(180)로 입력되던 전압이 차단되도록 구성된다.

[0144] 상기 시간 표시부는 상기 시간조정부에 의해 설정된 시간을 표시하도록 몸체 외면에 설치되는 LED및 LED 및 LCD 등의 램프와, 상기 컨트롤러로부터 설정된 시간에 대응되는 제어신호를 입력받고 상기 설정된 상기 LED및 LCD와 디스플레이되도록 하는 LED 및 LCD와 조절 스위치(180)로 구성될 수 있다.

[0145] 한편, 상기 침체는 치료 주파수가 잘 전달될 수 있는 금속재질과 특수 섬유 등으로 전기파가 잘 통하는 물질 등으로 구성시키는 것이 바람직할 것이며 또한 침의 상태를 자력이 발생하는 자석으로 하여 자기장의 효과까지 볼

수 있게 할 수도 있다.

[0146] 또한, 상기 전기파 조절 스위치(180)에서 전기파 강약 세기를 조절하는데 세기를 약하게 하려면 전기파 등의 세기 약 버튼을 누르면 그 동작 정도가 전기파 표시부(200)에 나타나게 되고 전기파 세기 강 버튼을 누르면 그 동작 정도가 전기파 표시부(200)에 나타나게 되므로 사용자의 원하는 강, 중, 약을 선택한 다음 전기파 조절 스위치(180)의 버튼 이를 통해 전기파의 종류를 설정하면 그 설정된 전기파의 종류가 전기파 제어표시부에 나타나게 된다.

[0147] 이와 같은 상태에서, 상기 작동 스위치(160)를 작동시키면, 이를 감지한 컨트롤러에서 상기 전원 공급부의 전압 이상기 전기 자극 침체에 컨트롤러의 명령대로 인가되어 전기 자극 침체를 통하여 발생된 전기파를 통해 본원의 전기 자극 침체의 작동을 하게 된다.

[0148] 그리고 상기 시간 조정부의 이용시, 상기 작동스위치(160)를 작동시킴과 동시에 상기 타임조정부의 시작과 정지 버튼을 작동시키면, 상기 표시부는 LCD에 설정되어 있는 시간이 타이머에 의하여 카운트 다운되기 시작한다.

[0149] 상기 타임표시부가 카운트 다운되는 동안에는 상기 컨트롤러가 타임표시부의 LED및 LCD에 설정되어 있는 시간이 종료되면, 상기 컨트롤러가 상기 전원공급을 오프시킴으로써, 상기 침체에 의한 전기파 치료를 종료하게 되는 것이다.

[0150] 이러한 구성에 의하여, 전원공급 부로부터 전원이 공급되면, 조절 스위치(180)는 작동 스위치(160)와 모드 선택 스위치(240)의 조작에 따라 메모리에 저장된 정보에 의거하여 전기파 발생부(40)를 작동시킨다. 전기파 발생부(40)가 작동함과 동시에, 전기파 발생부(40)로부터 전기파가 출력되고, 사용자는 본체의 손잡이부(60)를

[0151] 파지한 상태에서 원하는 신체 부위에 전기파 발생부(40)를 밀착시켜 전기파로 자극함으로써, 근육을 이완시키고 혈액순환을 촉진시켜 인체의 건강을 증진시킬 수 있게 된다. 특히, 전기파 발생부(40)는 본체에 수용되어 있으며 전기파 발생부(40)가 본체로부터 돌출되어 있어 신체 모든 부위에도 간편하게 사용할 수 있게 된다.

[0152] 한편, 전술한 실시 예에서는, 전기파 발생부(40)가 침 형상을 가지는 것으로 설명하고 있지만, 전기파 발생부(40)는 반구형 또는 다각형, 타원형의 단면형상을 가지며 돌출되거나 봉형상을 가질 수도 있는 것이다.

[0153] 도 5는 본원 발명의 기능성 침체에 있어 침체와 제어부 몸체의 일실시 예를 나타낸 사시도로서, 도 5를 참조하면 본 발명에 따른 전기 자극 침체의 침체부(300)는 다수개의 예리한 침체부(300)가 삽입되는데 상기의 침체부(300)에 내부 또는 외부에 형성된 다수개의 전도성 금속소재로 이루어진 침 삽입홀(360)에 상기 침체부(300)가 접촉이나 결합하게 되어 있으며, 이 침체는 본체 손잡이부(60)의 전기파 발생기로부터 발생한 전기파와 연결된 전기 전도부와 결합하여 있다.

[0154] 한편, 상기 침체부(300) 내부 또는 외부에 형성된 침체의 삽입 홀(360)은 전기 전도와 전성이 우수한 은, 동, 티탄 등의 금속으로 상기 침체의 전도부로 사용되는 것이 바람직할 것이다.

[0155] 한편, 바람직하게는 전기 전도부와 다수개의 예리한 침체와의 전기적인 결합 특성이 양호해지도록, 전기 전도부와 다수개의 예리한 침체의 사이에는 도전성의 합성수지 소재의 전도체가 포함될 수도 있을 것이다.

[0156] 이처럼 전기 자극 침체의 전기 입력부를 통해 전기발생 장치로부터 입력된 전기는 손잡이부(60) 내의 연결 케이블(260)을 통하여 제어부 몸체(120)에 형성된 침체의 전기 전도부로 전해지며, 최종적으로는 전기 전도부에 전기적으로 결합하여 있는 다수개의 예리한 침체에 전달되어 인체에 적용되게 되는 것이며 상기 침체는 시술자에 의해 인체의 피부 면에 삽입된 상태에서 피부조직에 이온 자극 및 소정 전기파의 전기 자극을 가하게 된다.

[0157] 본 발명에 따른 전기 자극 침체의 시술과정을 설명하면, 시술자는 전기 자극 침체의 손잡이부(60)를 손으로 파지하고서 상기 침체를 시술부위에 대고 회전하면서 압력을 가하게 되고 이러한 시술을 통하여 시술부위에는 많은 미세상처가 생김과 동시에 상기 침체 끝에서는 소정의 전기파의 전류가 주위의 피부조직으로 전도되며, 이에 따라 예리한 침체 주변의 피부조직의 이온을 흥분시키거나 전기적 진동 자극에 의한 열을 일으키게 된다.

[0158] 이와 같은 인체의 피부 면에 이온 자극 및 소정 전기파의 전기적인 진동 자극을 통해서, 피부조직의 효과적인 재생을 위해 피부층에서의 용액, 크림, 젤, 연고제 등의 흡수율을 획기적으로 높여 시술자의 피부 조직은 빠른 속도로 새로운 조직을 형성하게 되는 것이다.

[0159] 도 6은 본원 발명의 기능성 침체에 있어 침체와 제어부 몸체의 연결의 일실시 예를 나타낸 사시도로서, 도 6을 참조하면, 본 발명의 일실시예에 따른 전기 자극 침체는 전기 입력부, 손잡이부(60), 및 침체부(300)를 포함한다.

[0160] 여기서, 전기 입력부 및 손잡이부(60)의 구성 및 기능은 상기의 전기 자극 침체에서 설명한 바와 동일하다.

[0161] 본 발명에 따른 전기 자극 침체는, 전기파를 발생하는 전기파 발생부(40)와, 전기파 발생부(40)를 수용하며 파지할 수 있는 손잡이부(60)를 갖는 본체와, 본체의 착탈되는 침체부(300)에 인설된 전기파 발생부(40)로부터 발생된 전기파가 출력되는 다수의 전기파 발생부(40)를 가진다.

[0162] 상기 제어부 몸체(120)에는 상기 전기파 발생부(40)로부터 발생하는 전기파의 강약을 조절하는 작동 스위치(160)와 모드 선택 스위치(240)와,전기파의 출력시간을 설정하는 타이머 등을 포함하며 기기의 작동을 조작하는 작동 스위치(160)가 마련되어 있으며, 이러한 조작부의 작동 등에 관한 정보를 표시하는 디스플레이부인 표시부(200)가 마련되어 있다.

[0163] 아울러 상기 손잡이부(60)는 손잡이 상부케이스(80)와 손잡이 하부 케이스(100)의 사이에는 전기파 발생부(40)가 수용되어 있으며 전기파 발생부(40)는 제어부 몸체(120)에 구성되며 마이컴으로 이루어진 조절 스위치(180)에 의해 작동되며, 인쇄회로 기판상(PCB)에 마련되어 조절 스위치(180)의 작동에 의해 소정의 전기파로 발진하는 발진용 트랜스를 더 포함하게 되는 것이다.

[0164] 상기 전기파 출력 부에서 발생한 전기파는 침체에 전달되며 전기파 발생부(40)로부터 발생된 전기파가 치료받고자 하는 신체부위에 전달 가능하도록 전기파 발생부(40)와 통전 가능하게 설치되어 있다.

[0165] 또한, 손잡이부(60)와 손잡이 하부케이스(100)의 사이에는 조절 스위치(180)로 전원을 공급하는 전원 공급부가 수용되어 있으며 또한, 손잡이 상부 케이싱(80)과 손잡이 하부 케이스(100)는 상호 결합함으로써 파지할 수 있는 손잡이부(60)를 형성함이 바람직하다.

[0166] 한편, 본 발명에 따른 전기파 치료기는, 도 3, 4에 도시된 바와 같이, 작동 스위치(160)와 모드 선택 스위치(240)를 조작하면 조절 스위치(180)는 입력된 신호를 파악하고, 메모리에 미리 저장된 정보에 따라 전기파 발생부(40)를 작동시킨다.

[0167] 여기서, 조절 스위치(180)는 전기파 발생부(40)로부터 발생하는 전기파의 강약을 조절할 수 있을 뿐만 아니라, 조절 스위치(180)에 내장된 타이머에 의해 정해진 시간만큼, 또는 정해진 시간에만 작동하도록 전원을 가변시킬 수도 있게 된다.

[0168] 이러한 구성에 의하여, 전원 공급부인 전원(140)으로부터 전원이 공급되면, 조절 스위치(180)는 작동 스위치(160)와 모드 선택 스위치(240)의 조작에 따라 메모리에 저장된 정보에 의거하여 전기파 발생부(40)를 작동시키게 되는 것이다.

[0169] 이처럼 전기파 발생부(40)가 작동함과 동시에, 전기파 발생부(40)로부터 전기파가 출력되고, 사용자는 본체의 손잡이부(60)를 파지한 상태에서 원하는 신체 부위에 전기파 발생부(40)를 밀착시켜 전기파로 자극함으로써, 근육을 이완시키고 혈액순환을 촉진시켜 인체의 건강을 증진시킬 수 있게 된다.

[0170] 한편, 전술한 실시한 예에서는, 전기파 발생부(40)가 상기 침체부(300)에 식립된 침 형상을 가지는 것으로 설명하고 있지만, 바람직하게는 상기 침체부(300)에 자극용인 침 끝이 무딘 침을 삽입하거나 피부에 마사지나 약재를 흡수시키거나 바르기 위한 침이 삽입되지않는 밋밋한 침체부(300)를 탈부착하는 것도 바람직하다.

[0171] 또한, 상기 전기파 발생부(40)의 일실시 예에 의한 바람직한 전기파 발생상태를 개략적으로 설명하면 상기에서 공급되는 전원이 콘덴서와 저항과 트랜지스터 및 가변저항과 전기적으로 연결되어, 상기 작동 스위치(160) 켜(on)지면 상기에서 공급된 전원이 상기 콘덴서를 충전시키기 위하여 가변저항 측으로 흐름과 동시에 트랜지스터의 컬렉터에 인가되고, 콘덴서가 충전될 때까지 가변저항 측으로 흐르는 전류는 저항과 저항에서 발생하는 전압이 강하되는 만큼만 트랜지스터의 베이스 측으로 흐르고, 이후 콘덴서의 충전이 끝나면 상기 콘덴서는 디커플링 콘덴서의 역할을 하게 되어 전류는 트랜지스터의 베이스에 그대로 인가됨으로써 미세 전기파를 발생시키어 상기 침체부(300)의 침체부(300)에 전달되는 것이 바람직하다.

[0172] 그리고 바람직하기로 상기 전기 자극 침체 몸체(20)는 전원(140)을 교체할 수 있도록 케이스가 구비되며 전원인가를 확인할 수 있는 엘이디 다이오드가 배치되어 작동 스위치(160) 점등(turn-on)되면 엘이디 다이오드가 일정한 주기로 발광 되며, 여기서 상기 전기파 발생부(40)는 전기 자극으로써 유용한 정도의 미세전류인 수 마이크로 암페어 이상의 전류를 발생시키는 것이 필요하고 그 이유는 다음과 같다.

[0173] 전류의 경우 인체에서는 약 0.06㎃ 정도의 미세전류가 흐른다고 알려져 있으며, 건강 상태에 따라 이러한 미세전류의 강도가 다르다고 알려져 있으며, 통상적으로 건강 상태가 나빠지면 미세전류의 양이 훨씬 적게 흐르는

것이 임상적으로 알려져 있다.

[0174] 따라서 이러한 신체에 자극이 될 수 있는 정도의 크기를 가지는 미세 전기파를 외부에서 자극함으로써 신체 내부의 밸런스에 기여할 수 있게 된다.

[0175] 또한, 신체의 감각 수준에 따라 약간씩 정도의 차이는 있으나, 통상적으로 1㎃ 정도의 전류는 충분히 지각할 수 있다고 알려져 있으며, 장시간 전류의 통전은 별로 바람직하지 않다고 알려져 있다.

[0176] 따라서 이마나 얼굴을 통해 공급되는 전류는 1㎃보다는 적은 수~수백 마이크로 암페어(㎂) 정도의 크기면 족할 것이고, 바람직하기로 이러한 전류는 지속적 흐름이 아닌 일정시간 동안 단속적으로 흘러 자극으로써 역할을 수행하는 것이 바람직하다.

[0177] 그리고 가장 바람직하게는 순간 전류가 인체 내부전류인 300㎂ 이하로 전달되어 예민한 부분에 사용하거나 장시간 사용되더라도 신체에 부작용이 없는 정도의 미세전류가 흐르는 것이 좋다.

[0178] 또한 상기에서 도시된 바와 같이, 상기 전기파 발생부(40)는 콘덴서와 저항과 트랜지스터 및 가변저항을 연결하며 이에 스위치 버튼의 온-오프에 의해 전원(140)을 미세 직류전류로 변환하여 후술 되는 침체부(300)로 인가되도록 구성된다.

[0179] 바람직하게는 상기 침체부(300)로 인가되는 스파이크 펄스(Ps)의 주파수를 9.0±0.2Hz, 펄스 폭을 100~800㎲로 설정하는 동시에, 인체의 부하 저항에 대응하는 10~400KΩ 부하로 인가하는 스파이크 펄스의 펄스 폭 기간의 양의 피크 전압치가 1.5~100V가 되고, 또한 펄스 폭 기간에서의 양의 전압이 소정 전압치 이상을 유지하도록, 출력하는데 트랜스포머의 코일의 감은 수의 비를 설정함이 바람직하며 전원(140)으로부터 직류전원이 공급되고, 저항과 가변저항을 통하여 1~300㎂ 이하의 적정한 미세 전기파가 생기도록 하여 패치로 전도가 이루어지도록 한다.

[0180] 여기서 상기 전원(140) 전원은 1.5~12V의 직류전원을 공급하여도 무방할 것이며 이에 따라 가변저항의 폭이 달라지면 1~300㎂ 이하의 적정한 미세 전기파를 공급할 수 있게 되는 것이다.

[0181] 이러한 상기 전기자극 발생부의 작동은 다음과 같다.

[0182] 전기 자극 침체 몸체(20)에 인설된 작동 스위치(160)가 점등되면 최초로 공급된 1.5~12V의 직류전원이 상기 콘덴서를 충전시키기 위하여 가변저항 측으로 흐름과 동시에 패치를 통하여 트랜지스터의 컬렉터에 인가된다.

[0183] 그리고 상기 콘덴서가 충전될 때까지 가변 저항 측으로 흐르는 전류는 저항과 저항에서 발생하는 전압 강하 분만큼만 트랜지스터의 베이스 측으로 흐르게 트랜지스터는 아주 작게 통전된다.

[0184] 이후 상기 콘덴서의 충전이 끝나면 콘덴서는 디커플링 콘덴서의 역할을 하게 되어 전류는 트랜지스터의 베이스에 그대로 인가된다.

[0185] 따라서 트랜지스터가 점등(turn-on)되어 패치에 미세 전기파를 흐리게 된다.

[0186] 여기서 도시된 저항은 전기파의 값에 따라 회로에 배치될 수도 있다.

[0187] 따라서 필요로 하는 수십 마이크로 암페어의 전류를 생성하기 위해서는 상기 침체부(300)의 내부저항은 다음과 같은 일실시예에 의한 조건을 고려하였다.

[0188] 패치의 내부저항값은, R = V / I(1V의 전압을 가했을 때 1A의 전류가 흐르는 경우의 저항을 1Ω이라고 한다)로 구해질 수 있다.

[0189] 예를 들어 전원(140)에서 공급되는 전원이 3V라 가정할 때, 60㎂의 미세전류가 흐르기 위해서는 50㏀의 내부저항값을 가지는 침체부(300)를 형성하면 되고 이에 따라 침체부(300)의 내부저항값이 달라지면 1~300㎂ 이하의 적정한 미세 전기파를 공급할 수 있게 되는 것이다.

[0190] 상기 펄스 발생 회로의 제1포트는 기본 펄스를 출력하는 출력 포트이며, 기본 펄스는, 주파수가 8.0Hz, 펄스 전압(Vo)이 -5V, 펄스 폭이 100~800㎲로 설정됨이 바람직하다.

[0191] 상기 주파수는 8.0Hz이 최적이지만, 9.0±0.2Hz의 범위로도 허용됨이 바람직하다.

[0192] 또, 펄스 폭은 변경하는 것에 의해, 자극(에너지)의 강약 조합을 수시로 바꿀 수 있는 것이며 강약 전환 회로는, 펄스 폭을 변경하여, 자극의 강약 조합을 바꾸기 위한 회로로, 전술한 모드 선택 스위치(240)를 구비한다.

[0193] 이 경우, 모드 선택 스위치(240)의 가동 접점은, 펄스 발생 회로의 제2포트에 접속하는 동시에, 제1고정 접점은 무 접속으로 하고, 제2고정 접점은 저항을 통해 어스 라인에 접속하고, 제3고정 접점은 어스 라인에 직접 접속한다.

[0194] 이것에 의해, 모드 선택 스위치(240)를 제1고정 접점으로 바꾸면, 제2포트에는, 저항을 통해 전원 전압을 제공 가능하게 되기 때문에, 펄스 폭은, 500㎲가 되고, 자극은 "강"이 된다.

[0195] 또 바람직하게는 상기 모드 선택 스위치(240)를 제2고정 접점으로 바꾸면, 제2포트에는, 분압된 전원 전압을 제공 가능하게 되기 때문에, 펄스 폭은, 400㎲이 되고, 자극은 "중"이 된다. 또한, 모드 선택 스위치(240)를 제3고정 접점으로 바꾸면, 제2포트에 제공되는 전압은 "0(제로)"이 되기 때문에, 펄스 폭은, 200㎲가 되고, 자극은 "약"이 된다. 또한, 이와 같이 펄스 폭이 설정되고, 또한 주파수가 8.0Hz로 설정되는 것에 의해, 무 펄스 기간은, 대략 100msec 이상이 된다.

[0196] 한편, 펄스 발생 회로의 제1포트(출력 포트)는, 출력 트랜지스터를 통해 출력 트랜스포머의 코일의 한 끝에 접속한다.

[0197] 또한, 코일의 다른 한끝은, 작동 스위치(160)를 통해 양극에 접속되며 음극은, 어스 라인에 접속함이 바람직하다.

[0198] 이 경우, 출력 트랜스포머의 코일의 감은 수의 비는, 스파이크 펄스를 얻는 데에 중요한 설정 요소가 되고, 양호한 스파이크 펄스를 얻을 수 있다.

[0199] 이것에 의해, 인체의 부하 저항에 대응할 수 있는 예컨대 300㏀의 부하 저항을 접속했을 때에는, 최적의 파형 형상의 스파이크 펄스를 얻을 수 있으며, 이 경우, 얻어지는 스파이크 펄스의 펄스 폭의 기간에서의 양의 피크 전압치는, 1.5~100V 사이에서 이루어짐이 바람직하고, 또한 펄스 폭(Tp)의 기간에서의 양의 전압은, 소정 전압치 이상을 유지하는 파형이 얻어짐이 바람직하다.

[0200] 또, 출력 트랜스 포머의 코일의 한 끝은 양 전극부에 접속하는 동시에, 코일의 다른 한 끝은, 음 전극부를 구성하는 전극 플레이트 및 접속 잭에 각각 접속한다.

[0201] 한편, 전원 레귤레이터는, 입력단자를, 작동 스위치를 통해 양극에 접속하는 동시에, 출력 단자를, 전원입력 회로의 입력측에 접속한다.

[0202] 통상, 인체의 부하 저항발생은 10~400㏀이고, 코일의 양단 간에도 10~400㏀ 정도에서 부하 저항이 접속되며 이 결과, 침체부(300)의 침체부(300)로부터 치료하고자 하는 피부의 피부면 에 대하여 소정의 스파이크 펄스가 인가되는데 서서히 작동스위치를 올려서 따갑지않게 사용하는 것이 효과적이다.

[0203] 따라서, 이와 같은 전기 자극 침체의 사용에 의해, 특히, 인체의 생리적 메커니즘에 대응하는 주파수, 전압 등의 물리량은 보다 정밀하게 설정되는 것에 더하여, 파형의 동적 변화에 대해서도 최적의 설정이 행해지기 때문에, 피부자극이나 치료시 통증을 완화하고 치료 효과가 보다 높아진다.

[0204] 도 7은 본원 발명의 기능성 침체에 있어 침체와 제어부가 하나로 된 것의 일실시 예를 나타낸 사시도로서, 본 발명의 전기 자극 침체에 있어 제어부 몸체(120)와 관련 없이 독립된 전기 자극침체를 구성하는데 상기 침체에는 탈착 요 홈과 나사 산으로 탈착되는 롤러 손잡이부(60)의 일실시 예를 나타낸 사시도를 나타낸 것으,로 상기 침체부(300)는 침체 결합 나사 산과 이를 고정하는 고정패킹으로 침체부(300)와 손잡이부(60)가 분리 및 탈착되는 것 또한 바람직하다.

[0205] 또한, 상기 침체부(300)는 탈착 요 홈과 탈부착 버튼 또는 나사 산으로 바람직하게는 단 턱이나 자석, 끼움 부재로 상기의 전기 자극 침체가 인설된 손잡이부(60)와 분리 및 탈착되거나 또는 상기 손잡이부(60)와 침체부(300)는 상기 침체 몸체 어느 일측단에 일체로 돌출 설치된 일정 크기의 탈착 요홈 또는 끼움 편에 단 턱이나 끼움식, 자석 등으로 착탈 되게 끼울 수 있는 것을 특징으로 하는 침이 형성된 롤러를 사시도로 나타낸 것이다.

[0206] 이처럼 상기의 전기파 발생부(40)가 발생하는 침체부(300)는, 상기 제어부 몸체(120)에는 침체부(300)에 상기 전기파 발생부(40)와 전원(140)부와 조절 스위치(180)가 부착되며 사용자의 선택에 따라서 여러 가지의 실시에에 의하여 침체가 자유롭게 분리 및 착탈 되게 되는 것이며 예컨대 얼굴의 기미나 작은 점, 모공 등을 제거하기 위해서는 침의 지름 0.12㎜에 침 길이 2.0㎜가 바람직하고 얼굴의 여드름 자국을 없애기 위해서는 침의 지름 0.15㎜에 침 길이 2.3㎜가 바람직하고 이보다 큰 주름살을 없애는 데는 침의 지름 0.18㎜에 침 길이 2.5㎜가 바람직하고 인체에 형성된 흉터를 치유하기 위해서는 침의 지름 0.30~4㎜에 침 길이 5㎜가 바람직한데 상기하였듯

이 침의 지름이 작고 길이가 짧을수록 통증은 줄고 이와 반대로 침의 지름이 넓고 길이가 길수록 처음 사용하는 사람은 고통이 심하여 사용자가 이를 두려워하여 지름과 길이가 길은 침을 사용하여야 하는 사람인데도 통증 때문에 지름이 작고 길이가 짧은 침을 사용하고 있는 현실이며 상기의 침체부(300)가 부착된 미용기를 사용함에 있어 피부에 천공을 시키는 처음 과정에 침의 지름 0.30~4㎜ 에 침 길이 5㎜ 이상의 침을 사용하는 것은 고통으로 인한 무리가 따르므로 처음에는 피부의 단련을 위해서 침의 지름 0.12㎜에 침 길이 2.0㎜를 사용하고 점차 피부가 단련되고 고통을 차단하는 물질이나 면역 물질 및 콜라겐이 인체에 생성되면 그때부터 자신의 증상에 맞는 두껍고 긴 침을 사용하면 되는 것이며 일례로 여드름 자국과 주름, 기미 등을 한꺼번에 치료하고자하면 각기 사용되는 침의 굵기나 길이가 상이하므로 여러 대의 침체를 사용해야하는 문제점이 발생한바 본원의 전기파 발생부(40)가 발생하는 침체부(300)에는 침체 고정부재(320)를 통하여 상기 침체부(300)가 간편하게 탈부착하여 증상에 따라서 청결하고 요긴하게 사용할 수 있는 장점이 있는 것이다.

[0207] 한편, 상기 침체부(300)는 탈착 요 홈 또는 돌기 및 손잡이부(60)와 이를 탈착하는 탈부착 버튼으로 구성되어 상기의 침체 탈 부착부(340)와 손잡이부(60)를 단 턱이나 자석 또는 결합 돌기로 조립 및 해체하여 사용하는 것 또한 바람직하며 상기 침체부(300)는 침체 결합 나사 산과 이를 고정 하는 고정패킹으로 침체부(300)와 손잡이부(60)가 분리 및 탈착되는 회동식 연결부를 갖는 것 또한 바람직하다.

[0208] 이처럼 상기 침체부(300)는 침체 탈부착부(340)를 통하여 탈착 요홈과 탈부착 버튼으로 또는 단 턱과 탈착 요홈으로 분리 및 탈착되거나 또는 상기 손잡이부(60)와 침체부(300)는 상기 침체 몸체 어느 일 측 단에 일체로 돌출 설치된 일정 크기의 탈착 요 홈 및 그 끼움 편에 단 턱으로 착탈 되게 끼울 수 있는 것을 특징으로 하는 전기 자극 부가 구성된 침이 형성된 침체를 개시하게 되는 것이다.

[0209] 상기 침체부(300)는 침체 탈부착부(340)인 탈착 요 홈과 탈부착 버튼으로 탈부착 되거나 또는 단 턱과 탈착 요홈으로 분리 및 탈착되거나 또는 상기 손잡이부(60)와 침체부(300)는 어느 일 측 단에 일체로 돌출 설치된 일정 크기의 탈착요 홈 및 그 끼움 편에 단 턱으로 착탈 되게 되며 바람직하게는 탄력을 가지는 끼움 부를 밀착시키면 끼움 결합부가 걸림 공이 걸림 턱에 걸리게 되어 견고하게 밀착 고정됨으로써 상기 침체를 단단하게 사용할 수 있게 되는 것이다.

[0210] 이에 의하여, 침체부(300)만 별도로 휴대용으로 사용이 가능하며, 얼굴이나 이마를 비롯하여 신체의 모든 부위에 간편하게 사용할 수 있으며, 또한 근육을 이완시키고 혈액순환을 촉진시켜 인체의 건강을 증진시킬 수 있다.

[0211] 또한, 상기 침체부(300)를 구동하는 침체 구동 부재(420)의 구동수단은 크랭크 부(380)는 침체 구동 부재(420)인 모터나 에어의 힘으로 구동하게 되는데, 회전운동을 캠 부(400)를 통하여 왕복 운동하여 피부 및 두피를 자극하는데 본체 내부에 인설된 PCB부내에 부착된 컨트롤러에 의하여 속도와 강도를 조절할 수 있고 상기 PCB부는 이와 연통 된 전원을 연결 및 해체해주는 릴레이 부와 본체를 동작하는 작동스위치(160)로 구성되고 이를 연결케이블(260)을 통하여 침체 구동부재(420)인 모터 및 압축기나 컴프레서 등을 이용한 에어 터빈을 작동하게 되는데, 상기 침체 구동 부재(420)는 모터나 에어 터빈 대신에 초음파 진동자를 사용함도 바람직하다.

[0212] 그리고 상기 제조방법에 의해 제조된 침체부(300)는 종래와 같이 손잡이부(60)가 형성된 침체에 침체 탈 부착부(340)를 통하여 결합 및 탈착시켜 본원의 침체부(300)를 제조하게 되는 것이다.

[0213] 상기 본 발명의 명세서는 일 실시 예에 의한 바람직한 실시 예에 대하여 도시하고 설명하였으나 본 발명은 상기한 실시 예에 한정되지 아니하며, 특허청구범위에서 청구하는 본 발명의 요지를 벗어남이 없이 다양한 변형이 가능할 것이며 상기에 기재된 본원 발명은 명세서 및 청구범위에 사용된 용어나 단어는 통상적이거나 사전적인 의미로 한정해서 해석되어서는 아니 되며, 본원 발명자는 그 자신의 발명을 가장 최선의 방법으로 설명하기 위해 용어의 개념을 적절하게 정의할 수 있다는 원칙에 입각하여 본 발명의 기술적 사상에 부합하는 의미와 개념으로 해석되어야만 한다.

[0214] 따라서, 상기 명세서에 기재된 실시 예와 도면에 도시된 구성은 본 발명의 가장 바람직한 하나의 일실시 예에 불과할 뿐이고 본 발명의 기술적 사상을 모두 대변하는 것은 아니므로, 본 출원시점에 있어서 이들을 대체할 수 있는 다양한 균등물과 변형 예들이 있을 수 있음을 당업자는 이해하여야 한다.

[0215] 그리고 후술 되는 용어들은 본 발명에서의 기능을 고려하여 간략하게 정의된 용어들로서 이는 당업자의 의도 또는 관례 등에 따라 달라질 수 있으며 본원의 침 제조 방식은 통상의 바람직한 제조방법에 모두 포함될 수 있는 것이며 그러므로 그 정의는 본 명세서 전반에 걸친 내용을 토대로 내려져야 할 것이다.

## 도면의 간단한 설명

[0216] 도 1은 종래의 전기 자극 침체의 일실시 예를 나타낸 사진이다.

[0217] 도 2는 본원 발명의 기능성 침체에 있어 침체의 일실시 예를 나타낸 사시도이다.

[0218] 도 3은 본원 발명의 기능성 침체에 있어 침체의 또 다른 일실시 예를 나타낸 사시도이다.

[0219] 도 4는 본원 발명의 기능성 침체에 있어 침체와 구동부재의 일실시 예를 나타낸 사시도이다.

[0220] 도 5는 본원 발명의 기능성 침체에 있어 침체와 제어부 몸체의 일실시 예를 나타낸 사시도이다.

[0221] 도 6은 본원 발명의 기능성 침체에 있어 침체와 제어부 몸체의 연결의 일실시 예를 나타낸 사시도이다.

[0222] 도 7은 본원 발명의 기능성 침체에 있어 침체와 제어부가 하나로 된 것의 일실시 예를 나타낸 사시도이다.

[0223] *도면의 주요 부분에 대한 부호의 설명*

[0224] 20: 전기 자극 침체 몸체 40: 전기파 발생부

[0225] 60: 손잡이부 80: 손잡이 상부케이스

[0226] 100: 손잡이 하부 케이스 120: 제어부 몸체

[0227] 140: 전원 160: 작동스위치

[0228] 180: 조절스위치 200: 표시부

[0229] 220: 에어 분출구 240: 모드 선택스위치

[0230] 260: 연결 케이블 280: 연결단자

[0231] 300: 침체부 320: 침체 고정부재

[0232] 340: 침체 탈 부착부 360: 침 삽입 홀

[0233] 380: 크랭크 부 400: 캠부

[0234] 420: 침체 구동 부재

도면

도면1

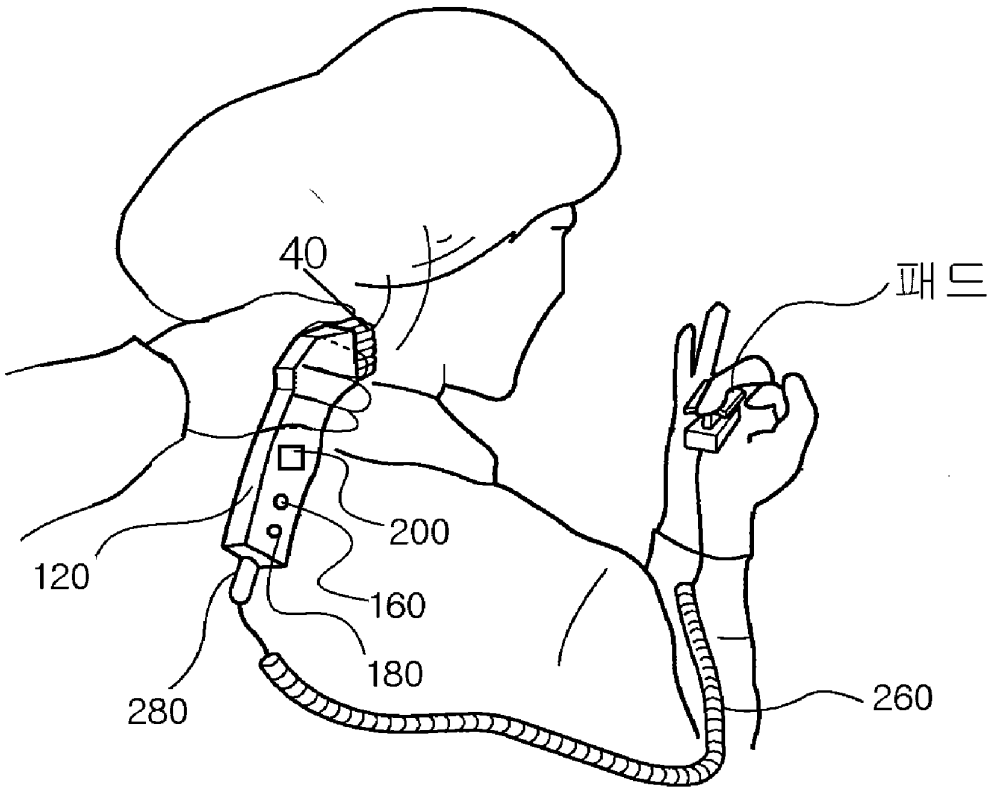
40
패드
200
120
160
180
280
260

도면2

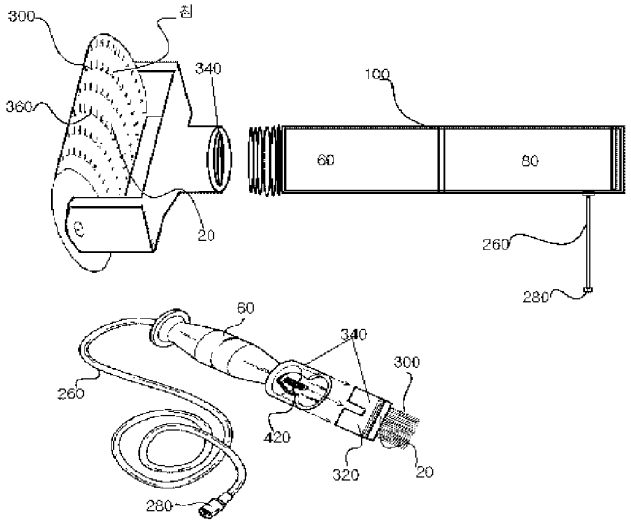
300
캡
340
360
100
60
80
20
260
280
60
340
300
260
420
320
20
280

도면3

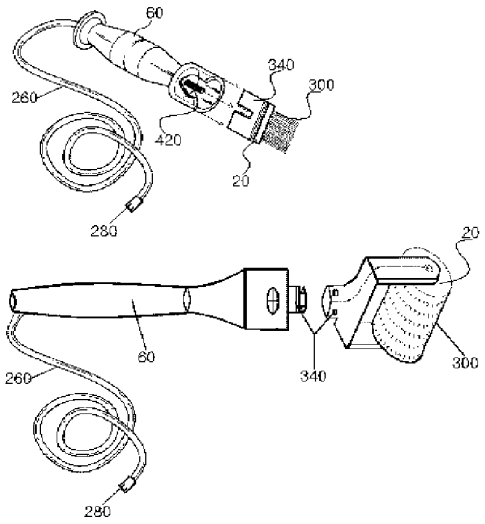
60
340
300
260
420
20
280
20
80
260
340
300
280

도면4

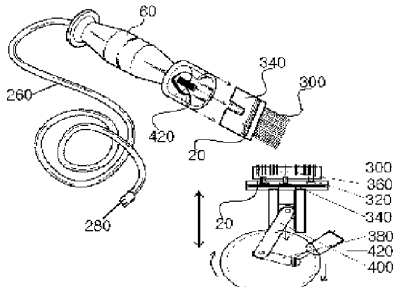
60
340
300
260
420
20
300
380
320
340
20
380
420
400
280

도면5

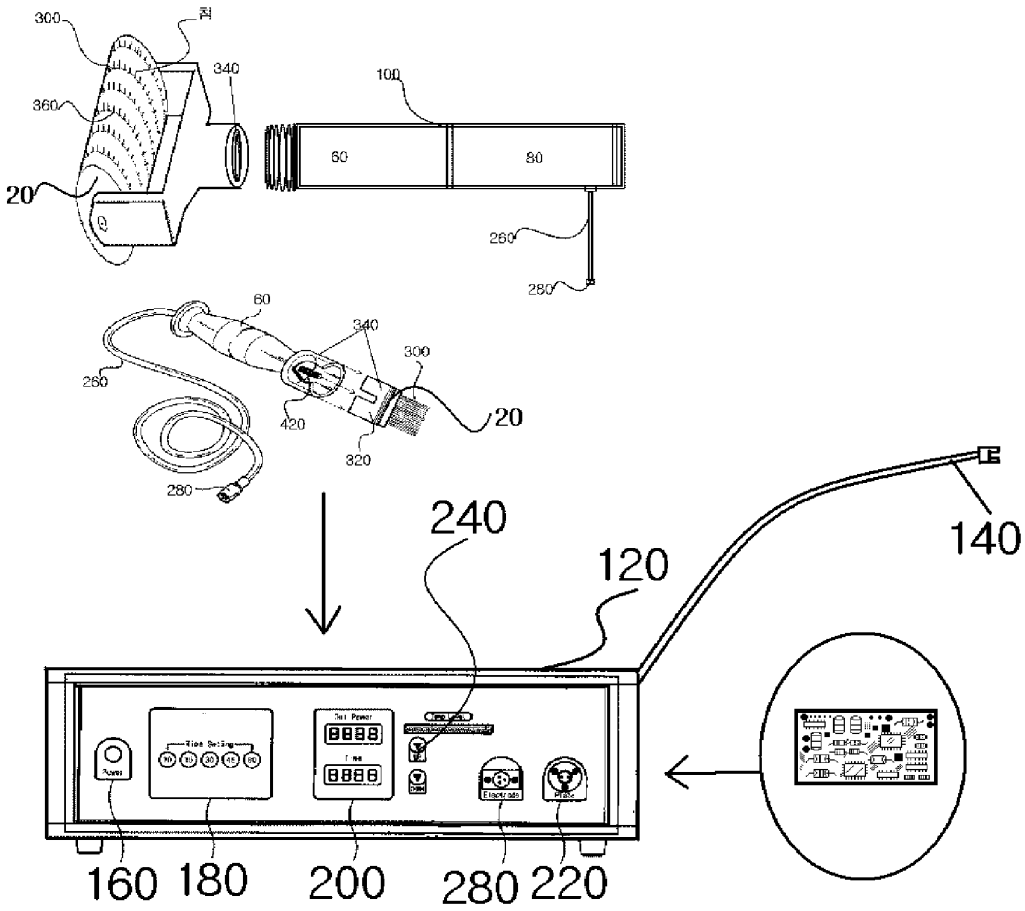
300
340
360
100
60
80
20
260
280
60
340
300
260
420
320
20
280
240
120
140
160
180
200
280
220

도면6

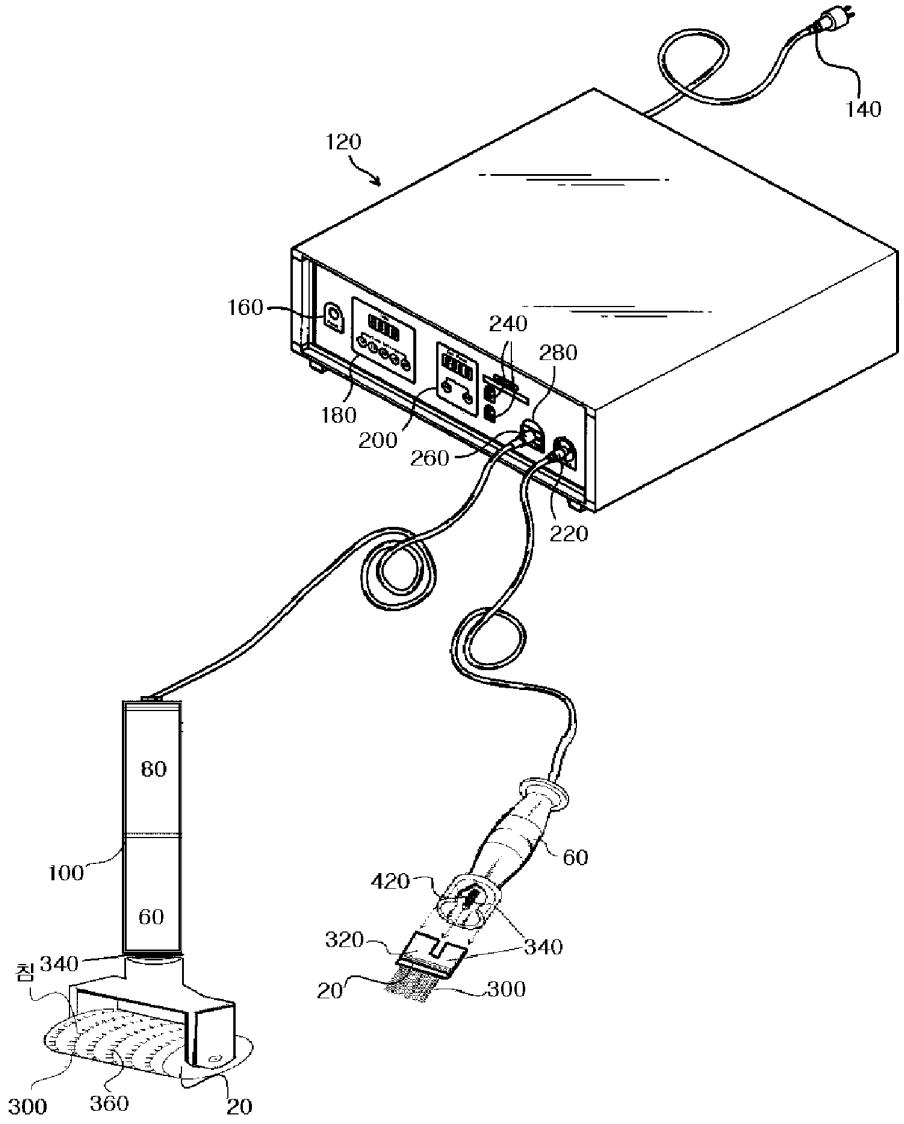
140
120
160
240
280
180
200
260
220
80
100
60
60
420
320
340
340
20
300
300
360
20

도면7

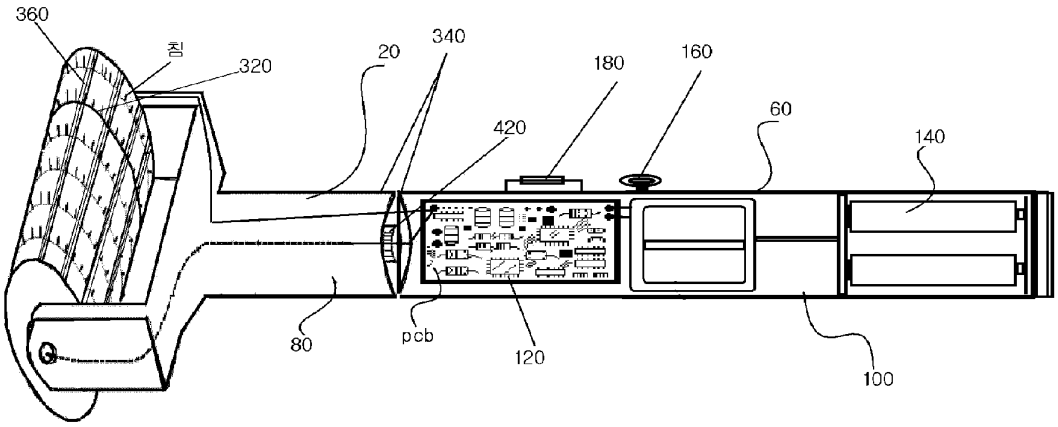

(19)日本国特許庁(JP)　(12)公表特許公報(A)　(11)特許出願公表番号
特表2009-506873
(P2009-506873A)
(43)公表日　平成21年2月19日(2009.2.19)

| (51)Int.Cl. | | F I | | テーマコード（参考） |
|---|---|---|---|---|
| A61N 1/06 | (2006.01) | A61N 1/06 | | 4C053 |
| A61B 18/00 | (2006.01) | A61B 17/36 | 330 | 4C160 |

審査請求 未請求　予備審査請求 未請求　（全 34 頁）

(21)出願番号　特願2008-530128 (P2008-530128)
(86)(22)出願日　平成18年9月5日 (2006.9.5)
(85)翻訳文提出日　平成20年4月24日 (2008.4.24)
(86)国際出願番号　PCT/US2006/034414
(87)国際公開番号　WO2007/030415
(87)国際公開日　平成19年3月15日 (2007.3.15)
(31)優先権主張番号　60/715,398
(32)優先日　平成17年9月7日 (2005.9.7)
(33)優先権主張国　米国 (US)

(71)出願人　505418308
ザ　ファウンドリー，　インコーポレイテッド
アメリカ合衆国　カリフォルニア　９４０２５，　メンロパーク，　ジェファーソン　ドライブ　１９９
(74)代理人　100075812
弁理士　吉武　賢次
(74)代理人　100091982
弁理士　永井　浩之
(74)代理人　100096895
弁理士　岡田　淳平
(74)代理人　100117787
弁理士　勝沼　宏仁

最終頁に続く

(54)【発明の名称】皮下構造を破壊するための装置および方法

(57)【要約】
肌の凹凸および過剰な脂肪組織、セルライトおよび瘢痕化のような他の疾患を治療するために、哺乳類の身体の皮下構造を崩壊／破壊するための方法および装置が提供される。この装置および方法は、肌を介して非侵襲的に、より肌を介してより少ない侵襲性で、あるいは皮下アプローチを介して最小限に侵襲的に治療を行うための、エネルギーを伝達する印加装置、極微針、カテーテルおよび皮下の治療装置を備える。手技を援助してかつ改良する様々な薬剤もまた開示されている。

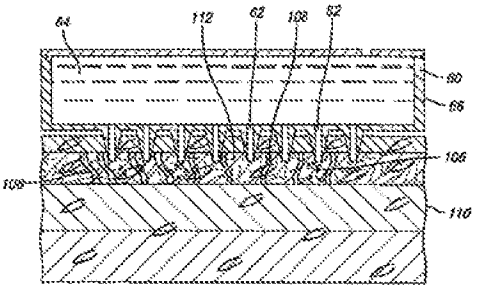

【特許請求の範囲】
【請求項１】
電界発生装置と、
前記電界発生装置と電気的に接続された少なくとも２つの電極と、
治療する皮下組織に治療促進剤の溶液を注入するように構成された注入モジュールと、
を備えることを特徴とする皮下組織を崩壊させるための医療装置。
【請求項２】
少なくとも１つの電極が治療する皮下組織に挿入されるように構成されるとともに、少なくとも１つの他の電極が治療する患者の表皮に当てられるように構成されていることを特徴とする請求項１に記載の医療装置。
【請求項３】
少なくとも２つの電極が治療する患者の表皮に当てられるように構成されていることを特徴とする請求項１に記載の医療装置。
【請求項４】
少なくとも２つの電極が治療する皮下組織に挿入されるように構成されていることを特徴とする請求項１に記載の医療装置。
【請求項５】
少なくとも２つの電極のうちの１つが接地電極として構成されていることを特徴とする請求項１に記載の医療装置。
【請求項６】
少なくとも２つの電極が双極電極として構成されていることを特徴とする請求項１に記載の医療装置。
【請求項７】
少なくとも２つの電極のうちの１つが略トロイド形状であることを特徴とする請求項１に記載の医療装置。
【請求項８】
少なくとも２つの電極のうちの１つが略円柱形に形作られていることを特徴とする請求項１に記載の医療装置。
【請求項９】
前記電界発生装置が電気穿孔発生装置であることを特徴とする請求項１に記載の医療装置。
【請求項１０】
ハウジングをさらに備え、
少なくとも２つの電極のうちの１つが前記ハウジングの内側に配設されていることを特徴とする請求項１に記載の医療装置。
【請求項１１】
少なくとも一つの電極が前記ハウジングの内側に配設された中央治療要素として構成されるとともに、
前記中央治療要素と前記ハウジングの間に環状領域が配設されていることを特徴とする請求項１０に記載の医療装置。
【請求項１２】
前記環状領域は、負圧供給源と接続されるように構成され、それによって前記ハウジングが治療する領域の上に重なっている肌と接触するように構成されていることを特徴とする請求項１１に記載の医療装置。
【請求項１３】
前記中央治療要素が前記ハウジングの内側に埋め込まれていることを特徴とする請求項１１に記載の医療装置。
【請求項１４】
前記中央治療要素は、治療する患者の肌の上で転動するように構成されていることを特徴とする請求項１１に記載の医療装置。

【請求項１５】
注入モジュールに接続された極微針を有するパッドをさらに備え、
このパッドは治療する患者の肌に追従するように構成されていることを特徴とする請求項１に記載の医療装置。
【請求項１６】
前記パッドは、リザーバおよび極微針を配置するための作動要素を更に有していることを特徴とする請求項１５に記載の医療装置。
【請求項１７】
前記極微針の少なくとも１つが、少なくとも２つの電極のうちの１つとして構成されていることを特徴とする請求項１５に記載の医療装置。
【請求項１８】
治療する皮下の領域に枝を配置するように構成されたカテーテルデバイスを更に備えることを特徴とする請求項１５に記載の医療装置。
【請求項１９】
前記枝は、針、電極および切断要素からなるグループより選択されることを特徴とする請求項１８に記載の医療装置。
【請求項２０】
第１の近位端、皮下組織への挿入に適合した第２の遠位端、およびそれらの間で縦方向に配置されたチャネルを有する管状要素と、
第１の近位端および第２の遠位端を有して前記チャネルの内側に配設されるとともに、前記チャネルの内側に引き込まれた第１の状態から前記チャネルの外に延びた第２の状態へと動くことができる、複数の伸長可能な細長い要素と、
を備え、
前記細長い要素の遠位端は、延びた状態のときに、引き込まれた状態におけるよりも互いに遠くに離間していることを特徴とする皮下組織を破壊する装置。
【請求項２１】
前記複数の伸長可能な細長い要素は、針，電極および切断要素からなるグループより選択されることを特徴とする請求項２０に記載の皮下組織を破壊する装置。
【請求項２２】
複数の伸長可能な細長い要素は、生物組織を破壊する効果のために、エネルギー場を形成するように幾何学的に構成されていることを特徴とする請求項２０に記載の皮下組織を破壊する装置。
【請求項２３】
第１の電極および第２の電極を設け、
治療する組織に隣接させて第１の電極を配置し、
前記第１および第２の電極の間に電流を生じさせるように構成されたエネルギー供給システムに前記第１の電極および前記第２の電極を接続し、
前記第１の電極と前記第２の電極との間に電流を提供し、それによって少なくとも一つの細胞の透過性を増大させることを特徴とする皮下構造を選択的に破壊する方法。
【請求項２４】
少なくとも前記第１の電極が，生物組織を破壊する効果のためのエネルギー場を作る幾何学的形状に構成されていることを特徴とする請求項２３に記載の皮下構造を選択的に破壊する方法。
【請求項２５】
ハウジングの内側に配設された中央治療要素を治療する組織の上で転動させることをさらに含み、
前記第１の電極が前記中央治療要素に配設されていることを特徴とする請求項２３に記載の皮下構造を選択的に破壊する方法。
【請求項２６】
前記中央治療要素の周りに配設された環状領域に大気より低い圧力を提供することをさ

らに含むことを特徴とする請求項２５に記載の皮下構造を選択的に破壊する方法。
【発明の詳細な説明】
【技術分野】
【０００１】
（関連出願の相互参照）
本出願は、２００５年９月７日に出願された米国仮特許出願第６０／７１５,３９８号に基づく優先権を主張する。なお、この参照によってその内容の全体が本願明細書に組み込まれるものとする。
本発明は、表皮および皮下における皮膚の凹凸を治療するための方法および装置に関し、より詳しくは、過剰な脂肪組織、セルライトおよび瘢痕化のような皮膚の凹凸および他の疾患を治療するために、哺乳類の身体の皮下構造を崩壊／破壊する方法および装置を提供するものである。
この明細書において言及する全ての出版物および特許あるいは特許出願は、個々の出版物、特許あるいは特許出願があたかも具体的にかつ個別的に組み込まれるかのように、その参照により同一範囲で本願明細書に組み込まれるものとする。
【背景技術】
【０００２】
女性型の脂肪栄養障害は、皮膚の表面（肌）の組織分布の変化、あるいは皮下のある領域において増大した流体保持力あるいは脂肪組織の増殖によって生じる陥凹形成効果につながる、皮下組織の限局性の代謝異常である。このような状態は、一般にセルライトとして公知であるが、思春期後の女性の９０％およびいくらかの男性に影響を及ぼす。セルライトは一般に尻、臀部および脚部に出現するが、一般的に認識されているように必ずしも太りすぎによって生じるというわけではない。セルライトは、表皮および真皮層の下にある皮下レベルの組織に形成される。この領域において、脂肪細胞は、セプタムと呼ばれている結合組織のバンドによって取り囲まれた室の内部に配置される。水分が保持されると、これらの線維性セプタムによって定められる周辺部の内側に保持されている脂肪細胞が伸張し、かつセプタムおよび取り囲んでいる結合組織を伸張させる。最終的には、この結合組織が収縮しかつ硬化（硬化症）して柔軟性を持たない長さで肌を保持する一方、セプタム間の室が重量の増加および水分の増加によって伸張し続ける。このことは肌の領域が引き下げられることに帰着するが、その一方で他の部分が外側に膨張するので、皮膚表面上につぶつぶのある「ゆず肌」あるいは「カテージチーズ」のような外観をもたらす。
【０００３】
肥満はセルライトの根本的な原因であるとは考えられないけれども、その領域における脂肪細胞の数の増大により、それは間違いなくセルライト領域における陥凹状の外観を悪化させる。深部の脂肪および解剖学的組織のより大きな領域を目標とする脂肪吸引のような従来の脂肪摘出技術は、時にはセルライトの外観を悪化させることがある。皮下の脂肪ポケットが残存するとともに、その領域の下方に横たわっている塊（深部の脂肪）の喪失によって目立つことになるからである。脂肪吸引を何度実行しても、患者はなお残存しているセルライトのような肌の凹凸の治療を要求する。
【０００４】
セルライトのような肌の凹凸を治療するための様々なアプローチ、および不必要な脂肪組織の除去が提案されてきた。例えば、様々な局所的な薬剤の付加に加えた、吸引とマッサージの組合せあるいは吸引、マッサージおよびエネルギの適用によって患部に機械的なマッサージを提供する方法および装置が現在は利用可能である。１９５０年代に開発されたメソセラピーは、スポーツ傷害から慢性の痛みにおよぶ疾病のために肌を介して様々な治療溶液を注入するものであり、しわおよびセルライトを治療するための美容整形手技としてヨーロッパにおいて広く用いられてきた。この治療は、アミノフィリン、ヒアルロン酸、ノボカイン、植物エキスおよび他のビタミンといった様々な薬剤の肌を介しての注入あるいは移入を含み、血行および脂肪酸化の可能性の増大をもたらす。Acthyderm（Tuswood International，オンタリオ，カナダ）と名付けられた治療は、ビタミン、抗繊維化薬

、脂肪分解薬(lypolitics)、抗炎症剤といった様々なメソセラピー薬剤の塗布に続いて、真皮に小さなチャネルを開けるために角質層を電気穿孔するローラシステムを用いる。

【０００５】

リンパの排液を改善するマッサージ技術が１９３０年代の初期に試みられた。米国特許第５，８８５，２３２号および第５，９６１，４７５号に記載されている"Endermologie"装置（LPG Systems、フランス）、米国特許公開２００５／００４９５４３号に記載されている"Synergie"装置（Dynatronics、ソルトレークシティ、ユタ州）および"Silklight"装置（Lumenis、テルアビブ、イスラエル）のような機械的なマッサージ装置あるいはプレソテラピーもまた開発されてきたが、これらの全てが吸引および機械的なローラによる皮下マッサージを用いるものである。なお、これらの文献の全体がこの参照によって本願明細書に組み込まれるものとする。他のアプローチは様々なエネルギー源を含んでいるが、Cynosureの"TriActive"装置（Cynosure，ウェストフォード、マサチューセッツ州）は機械的なマッサージに加えて半導体レーザのパルスを用いるし、"Cellulux"装置（Palomar Medical，Burlington，マサチューセッツ州）は冷却されたチラーを介して目標とする皮下脂肪組織に赤外光を放射する。米国特許第６，８８９，０９０号、第６，７０２，８０８号および第６，６６２，０５４号に詳述されている"VelaSmooth"システム（Syneron，Inc.，Yokneam Illit，イスラエル）は、脂肪組織の代謝を増大させる吸引と共に双極性の高周波エネルギーを用いる。なお、これらの文献の内容の全体がこの参照によって本願明細書に組み込まれるものとする。米国特許第５，７５５，７５３号，第６，７４９，６２４号、第５，９４８．０１１号、第６，３８７，３８０号、第６，３８１，４９７号、第６，３８１，４９８号，第５，９１９，２１９号、第３，３７７，８５４号、第６，３７７，８５５号、第６，２４１，７５３号、第６，４０５，０９０号、第６，３１１，０９０号、第５，８７１，５２４号、第６，４１３，２５５号，第６，４６１，３７８号，第６，４５３，２０２号、第６，４３０，４４６号に詳述されている．"Thermacool"装置（Thermage，Inc.，Hayward，カリフォルニア州）は、皮下の線維性セプタムを縮小させてしわおよび他の肌欠陥を治療するために高周波エネルギーを用いる。なお、これらの文献の内容の全体がこの参照によって本願明細書に組み込まれるものとする。それらの全部において本願明細書に引用したものとする。いくつかの針の組を用いて低周波割込み電磁場を印加することにより循環の排液を助ける、脂肪電気泳動のような他のエネルギベースの治療法もまた開発されてきた("Cellulite. Aspects of Cliniques et Morpho-histologiques"，J. med. Esth. Et Chir Derm (1983)；10(40)，229-223)。なお、この文献の内容の全体がこの参照によって本願明細書に組み込まれるものとする。同様に"Dermosonic"装置（Syaedex Medical、ミネアポリス、ミネソタ州）においては、保持された流体および毒素の再吸収および排液を促進するために無侵襲性の超音波が用いられる。さらに、米国特許出願第２００４／００１９３７１号は、細胞を改質して肌の凹凸を治療するためにエネルギーを付加することを記載している。また、米国特許出願第２００３／０２２０６７４号ははセルライトを治療するために冷却の使用を記載している。

【０００６】

瘢痕化および陥凹形成といった肌の凹凸の治療における他のアプローチは、サブシジョンと呼ばれる技術である。この技術は、陥凹形成あるいは瘢痕化の領域において比較的大きい寸法の針を皮膚下に挿入し、次いで肌の下において機械的に針を操作して皮下領域の線維性セプタムをバラバラにする。"Subcision: A treatment for cellulite"，International Journal of Dermatology (2000) 39:539-544に詳述されているように、目標領域に局所麻酔薬を注入し、１８サイズの針を皮膚表面の１０～２０ミリメートル下方に挿入する。次いで，針を表皮に平行に案内して肌の下に剥離平面を作り出し、陥凹形成あるいは瘢痕化を生じさせている締め付けられたセプタムを殆ど完全に引き裂き、あるいは「自由に引き上げる」。それから、出血を制御するために圧力を負荷し、次いで手技に続けて圧縮布を使用する。いくらかの患者には臨床的な効果がある反面、痛み，挫傷、出血および瘢痕化に帰着することもあり得る。米国特許第６，９１６，３２８号は、サブシジョンのために横方向に配置される切削機構を記載している。なお、この文献の内容の全体がこの

参照によって本願明細書に組み込まれるものとする。また、超音波で支援されたサブシジョン技術を用いる技術が、"Surgical Treatment of Cellulite and its Results", American Journal of Cosmetic Surgery, (1999)16:4 299-303に詳述されている。なお、その内容はこの参照によって本願明細書に組み込まれるものとする。

【０００７】

脂肪吸引、腫脹性脂肪の吸引、リポローシス(lypolosis)として公知の技術は、身体皮下および深部脂肪領域の脂肪組織を目標としている。これらの技術はまた、脂肪細胞を崩壊させてから取り除くこと、および身体の免疫／リンパシステムによる再吸収のためにそれらを残すことを含む。従来の脂肪吸引は、取り除かれる脂肪の部位に配置される外科的なカニューレの使用、流体の注入および脂肪組織をバラバラにするカニューレの機械的な動き、崩壊させた脂肪組織を患者から直接吸引するための吸入を含む。"Lysonix"システム（Mentor Corporation、サンタバーバラ，カリフォルニア州）は、米国特許第４，８８６，４９１号および第５，４１９，７６１号に詳述されているように、（目標部位の組織の空洞化によって）組織分裂を援助するために、吸引カニューレのハンドピース上にある超音波振動子を用いる。なお、これらの文献の内容の全体がこの参照によって本願明細書に組み込まれるものとする。加えて、米国特許第６，０４１，７８７号および第６，０３２，６７５号に詳述されているように、脂肪組織を破壊するために低温冷却することが提案されてきた。なお、これらの文献の内容の全体がこの参照によって本願明細書に組み込まれるものとする。腫脹性の脂肪吸引として公知の従来の脂肪吸引技術の変形例は１９８５年に導入されたが、現在では米国における標準的な治療となっている。それは、吸引カニューレによる機械的な破壊および除去の前における、目標領域への腫脹性の流体の注入を伴う。この流体は、機械的な破壊に伴う痛みの緩和を助けるとともに、組織を膨張させて機械的な除去の作用を受けやすくする。リドカインのような局所麻酔薬、エピネフリン，食塩水，カリウム等の血管収縮剤を含む様々な組合せの流体を腫脹性の溶液として用いることができる。そのようなアプローチの利点は、以下の論文に詳述されている。"Laboratory and Histopathologic Comparative Study of Internal Ultrasound- Assisted Lipoplasty and Tumescent Lipoplasty" Plastic and Reconstructive Surgery, Sept. 15, (2002) 110:4, 1158-1164、および"When One Liter Does Not Equal 1000 Milliliters: Implications for the Tumescent Technique" Dermatol. Surg. (2000) 26:1024-1028、なお、これらの文献の内容の全体がこの参照によって本願明細書に明白に組み込まれるものとする。

【０００８】

Liposonix（Bothell,ワシントン州）および、Ultrashape（テルアビブ、イスラエル）は、脂肪組織を非侵襲的に破壊するために焦点を合わせた超音波を用いる。米国特許第６，６０７，４９８号、米国特許公開２０００４／０１０６８６７号および２００５／０１５４４３１号は、これらのシステムを記載している。なお、これらの文献の内容の全体がこの参照によって本願明細書に組み込まれるものとする。

【０００９】

皮膚科的クリーム、化粧水、ビタミンおよびハーブサプリメントを用いる様々な他のアプローチもまた提案されてきた。個人的な温泉場およびサロンは、身体のこすり洗い、圧覚点マッサージを含むセルライトマッサージ治療を提供するが、植物性揮発油，海草、トクサ，クレマチスおよびツタのような植物化学種から抽出されたハーブ製品の使用もまた提案されてきた。多数の治療が存在するけれども、それらの殆どは肌の凹凸に対して永続的な効果を提供しないし、いくつかは（脂肪吸引が瘢痕化あるいはセルライトのより顕著な外観を生じさせるように）一つの治療が他のものを悪化させ，あるいはその採用を制限するマイナスの副作用を有している。ほとんどの治療は、継続する複数の治療を必要とし、それらの効果を維持するためにはかなりの出費がかかり，かつ結果もまちまちである。

【発明の開示】

【発明が解決しようとする課題】

【００１０】

前述したことを考慮すると、肌の凹凸を治療するための最小限に侵襲性のあるいは無侵襲性の方法および装置を提供すること、および顔面、首、腕、脚部、大腿、臀部、胸部、腹部および他の目標領域のような人体の部位に継続する美的な結果を提供することが望ましい。

【００１１】

また、肌の凹凸を治療するための、従来技術を改良して侵襲性がより少なくかつ副作用の少ない方法および装置を提供することが望ましい。

【課題を解決するための手段】

【００１２】

前述したことに鑑みて、本発明の一態様は、皮膚および皮下の凹凸、より詳しくは過剰な脂肪組織、セルライト、瘢痕化および関連した疾患を治療する、最小限に侵襲的あるいは非侵襲的で、制御されかつ選択的な、より耐久性のある効果を提供する方法および装置を提供する。

【００１３】

本発明の一態様においては、（皮膚の表面に）非侵襲的に、（皮膚表面下３～１０ミリメートルの間で）より低侵襲的に、あるいは（深部脂肪層に対して６ミリメートルよりも深く）最小限に侵襲性の装置を適用し、電気、超音波あるいは他のエネルギー場を用いて哺乳類の身体の皮下構造を崩壊／破壊する、そのような状態を治療するための方法および装置が提供される。

【００１４】

本発明の更なる態様において、そのようなエネルギー場は、標的細胞膜の透過化処理(pereabilization)を介して細胞レベルで組織を崩壊させるための、指定された持続期間および振幅の一つのパルスあるいは複数のパルスによって発生させることができる。本発明の更なる態様においては、標的皮下構造の細胞膜に孔を生成することにより、細胞の死滅に帰着する不可逆的な細胞損傷を生じさせることが望ましい。

【００１５】

本発明の他の態様においては、高周波エネルギー、直流、電気抵抗による熱エネルギー、超音波エネルギー、マイクロ波エネルギーあるいはレーザエネルギーを印加する本発明の装置および方法を用いて皮下の構造を破壊することが望ましい。

【００１６】

本発明の別の態様においては、標的組織（結合組織、コラーゲン、脂肪組織等）への電気的な手技は、細胞膜の可逆的なあるいは不可逆的な電気穿孔を生じさせることにより細胞レベルの組織を破壊して印加された電界の作用を受けやすくするべく、低張塩水、カリウム等の促進剤の注入あるいは付加による細胞内の環境あるいはまた細胞膜の変化によって改良することができる。

【００１７】

本発明の別の態様において、標的組織（結合組織、コラーゲン、脂肪組織等）の破壊は、微小な泡、攪拌された塩水、商業的に入手可能な超音波造影剤等のような促進剤を注入あるいは付加し、その領域に供給されたエネルギーを増大させ、空洞化等によって治療効果を高めることにより改良することができる。

【００１８】

本発明の更なる態様において、エネルギー伝達部材は、標的部位へのエネルギー供給の改良に適するように、皮膚に、経皮的にあるいは皮下に配置することができる。

【００１９】

本発明の更なる態様は、リドカイン、エピネフリン、低張塩水、カリウム、攪拌塩水、微小な泡、商業的に入手可能な超音波造影剤、微小球体等のような治療促進剤の治療部位への付加と共に、本発明のエネルギーアプローチを用いることにより、肌の凹凸および他の関係する疾患を治療する方法および装置を提供することにある。

【００２０】

加えて、本発明の別の態様では、本発明の治療を施した後に、全体的な所望の効果を改

良する必要に応じて、脂肪細胞、脂肪、ＰＬＬＡ、コラーゲン、ヒドロキシアパタイト、ヒアルロン酸等の充填剤を付加する。

【００２１】

本発明の更なる態様において、体内の複数の位置から安全に適用することができる治療を提供するために、ある種の型の細胞は選択的に破壊するがそれ以外については破壊しない方法および装置を提供することが望ましい。

【００２２】

本発明の一態様は、皮下組織を破壊するための医療装置であって、電界発生装置、この電界発生装置と電気的に接続された少なくとも２つの電極、および治療する皮下組織に治癒促進剤の溶液を注入するように構成された注入モジュールを備える。少なくとも一つの電極は治療する皮下組織に挿入されるように構成され、かつ少なくとも一つの他の電極は治療する患者の表皮に当てられるように構成される。本発明の更に別の態様において、少なくとも２つの電極が治療する患者の表皮に当てられるように構成される。少なくとも２つの電極を、治療する皮下組織に挿入されるように構成してもよい。少なくとも２つの電極のうちの１つは接地電極として構成することができる。少なくとも２つの電極は双極電極として構成することができる。少なくとも２つの電極のうちの少なくとも１つは、概ね環状の形状である。少なくとも２つの電極のうちの少なくとも１つは概ね円柱の形である。さらに別の態様において、電界発生装置は電気穿孔（エレクトロポレーション）発生装置である。

【００２３】

この医療用機器は、ハウジングを更に含み、少なくとも２つの電極のうちの１つがこのハウジングの内側に配設される。少なくとも１つの電極はハウジングの内側に配設される中央治療要素として構成することができ、この中央治療要素とハウジングとの間に環状領域を配設することができる。この環状領域は、負圧供給源に接続されるように構成することができ、それによってハウジングは治療する領域の上に重なっている肌と接触するように構成される。中央治療要素はハウジングの内側に埋め込むことができる。中央治療要素は、治療する患者の肌の上を転動するように構成することができる。

【００２４】

本発明の更なる態様において、この装置は、注入モジュールに接続された極微針を有したパッドを備え、このパッドは治療する患者の肌に追従するように構成される。このパッドは、リザーバおよび極微針を配置させるための作動要素を含むことができる。なお本発明の更なる態様において、少なくとも極微針の１つが、少なくとも２つの電極のうちの１つとして構成される。

【００２５】

本発明の更なる態様において、カテーテルデバイスは、治療する皮下領域に枝を配置するように構成することができる。これらの枝は、針、電極および切断要素からなるグループより選択される。

【００２６】

本発明の更に別の態様は、皮下組織を破壊する装置であって、第１の近位端、皮下組織への挿入に適合した第２の遠位端、およびそれらの間で縦方向に配置されたチャネルを有した管状要素を備える。複数の伸長可能な細長い要素は、第１の近位端および第２の遠位端を有してチャネルの内側に配設されるとともに、チャネルの内側に引き込まれた第１の状態からチャネルの外に延びた第２の状態へと動くことができ、細長い要素の遠位端は、延びた状態のときに、引き込まれた状態におけるよりも遠くへと互いに離間する。複数の伸長可能な細長い要素は、針、電極および切断要素からなるグループより選択することができる。本発明の更なる態様においては、複数の伸長可能な細長い要素は、生物組織を破壊する効果のために、エネルギー場を形成するように幾何学的に構成される。

【００２７】

本発明の一態様は皮下構造を選択的に破壊する方法であり、第１の電極および第２の電極を設け、治療する組織に隣接させて第１の電極を配置し、第１の電極および第２の電極

をエネルギー供給システムに接続し、このエネルギー供給システムは第１および第２の電極の間に電流を生じさせるように構成され、第１の電極と第２の電極との間に電流を提供し、それによって少なくとも一つの細胞の透過性を増大する。少なくとも、第１の電極は、生物組織を破壊する効果のために、エネルギー場を作る幾何学的に構成することができる。この方法は、ハウジングの内側に配設された中央治療要素を治療組織上で転動させることを含むが、第１の電極は中央治療要素に配設される。本発明の更に別の態様においては、大気より低い圧力が、中央治療要素の周りに配設れた環状領域に与えられる。

【００２８】

本発明の更なる特徴、その本質および様々な利点は、添付の図面および以下の説明から明らかとなる。

【発明を実施するための最良の形態】

【００２９】

本発明は、コラーゲン、結合組織、脂肪組織（脂肪細胞）等の皮下構造（あわせて「標的組織」あるいは「皮下構造」）を標的として破壊する方法および装置に関する。本発明は、標的とする領域の美的な外観の改善に有用である。この標的領域は、人体において改善が望まれる、顔面、あご、首、胸部、乳房、腕、胴、腹部（骨盤領域を含む）、大腿、臀部、膝および脚部を含む任意の表面あるいは輪郭から成る。標的組織には、その領域の結合組織あるいはセプタム、または皮下および深部脂肪の沈澱あるいは層のような、その下に横たわっていて望ましくない身体の輪郭を悪化させ得る組織が含まれる。

【００３０】

肌の凹凸は、セルライトや瘢痕化、あるいは首、あご、乳房、尻、腹部、腕等の領域における脂肪の沈澱あるいは過剰な脂肪といった、外側の様相に対する人の満足感を減少させる状態を指す。

【００３１】

ここで図１Ａおよび 図１Ｂを参照すると、治療すべき皮膚組織あるいはまた皮下組織の目標領域１００の断面が示されているが、表皮１０２、真皮１０４、皮下脂肪１０６、線維性のセプタム１０８、微小循環、リンパ排液、およびより深部脂肪層１１０が含まれている。真皮は、実質的に縦のセプタムあるいは膠原線維を介して皮層に付着した脂肪皮下結合組織に接続されている。この皮下脂肪組織は、セプタムの繊維によって分離されて、脂肪組織あるいは脂肪の室１１２に区画されている。これらの室は増大した脂肪細胞あるいは保持されている流体の存在に起因して膨張し、脂肪領域が膨張してセプタムが張力下で厚くなると、セプタム上に張力を生じさせて最終的には皮膚表面に陥凹を形成する。次いで微小循環およびリンパ排液が弱まり、さらには局部的な代謝性の症状を悪化させる。図１Ａは、肌の凹凸を呈していない全く通常の肌の断面を示している。図１Ｂは、膨張してセプタムに締め付けられて、不規則な皮膚表面の特徴につながる皮下脂肪層を示している。

【００３２】

蓄えられたあるいは深部脂肪層１１０は、皮下脂肪層１０６の下位に配設されて肌の凹凸の一因となる。そのため、この開示においては「皮下の構造」として考慮する。少なくとも一つの実施形態において、本発明の装置は、上述したような目標領域１００に向けることができる。いくつかの特定の実施形態には、エネルギー支援サブシジョン、線維性セプタム１０８の破壊、陥凹形成の原因となる皮膚表面上の外側の圧力を少なくするための皮下脂肪１０６の細胞の破壊、あるいは全体的な表面輪郭のためより深部脂肪層１１０の破壊が含まれる。

【００３３】

本発明の目的を達成するためには、電気穿孔（可逆性あるいはまたは不可逆性）、パルス電界、高周波エネルギー、マイクロ波エネルギー、レーザエネルギー、超音波エネルギ等を含む様々なエネルギー形態を用いて皮下構造１０６、１０８、１１０の破壊を達成する方法および装置を用いることが望ましい。例えば、パルス電界の適用、あるいはまた目標領域１００に直接的にあるいは目標領域に近接させた電気穿孔の適用は、所望の破壊を

生じさせることができる。この開示においては、「電気穿孔（エレクトロポレーション）」という用語はパルス電界（PEFs）、ナノ秒パルス電界（nsPEFs）、イオン浸透、電気泳動法、電子透過化処理，音響穿孔、あるいはまたその組合せの、恒久的なあるいは一時的な、可逆的なあるいは不可逆的な，補助的な薬剤を使用しあるいは使用しない、熱影響の存在を必要としない使用を含む。同様に、本願明細書において用いる「電極」という用語は，アンテナ、例えば極超短波送信装置や超音波要素を含む、種々のタイプのエネルギーを生み出す装置の使用を包含する。

【００３４】

可逆的な電気穿孔は１９７０年代の初期に初めて認められたが、電子化学療法、遺伝子導入、経皮薬物送達、ワクチン等のような様々な目的のために、目標とする細胞への化学製品、薬物、遺伝子および他の微粒子を移入させるべく，医学および生物学において広範囲にわたって用いられてきた。不可逆性の電気穿孔は、電気穿孔技術を用いるときには歴史的にほとんどの場合に回避されてきたが，水および食品の細菌除去(debacterilization)、基幹細胞強化および癌細胞パージ（Mangano、米国特許第６，０４３，０６６号）、腫瘍性前立腺組織の統制された切除（Chomenky、ＵＳ２００３／００６０８５６）、身体血管の再狭窄の治療（Jaafar、ＵＳ２００１／００４４５９６），脂肪細胞の選択的不可逆性電気穿孔法（Jaafar，ＵＳ２００４／００１９３７１）および腫瘍切除(Davalos，et al Tissue Ablation with Irreversible Electroporation，Annals of Biomedical Engineering 33:2，pp. 223-231（２００５年２月）の用途における細胞分離のために近年提案されてきている。

【００３５】

さらに、超短パルスあるいはナノ秒パルス電界（nsPEFs）に適用されるエネルギー場も，本発明に用途を有している。そのような技術は，外膜を永久的に崩壊させることなしに細胞下の構造を目標とするために超短波パルス長を用いる。この技術の実例は、Schoenbach et al. In Intracellular Effect of Ultrashort Electrical Pulses in J. Bioelectromagnetics 22:440-448 (2001)に記載され，かつ、米国特許６，３２６，１７７に記載されている。なお，その内容はこの参照によって本願明細書に明白に組み込まれるものとする。短いパルスは細胞内の器官を目標とし、細胞膜に電気穿孔効果を呈するが、そのような効果は可逆的であるため恒久的な膜破壊につながることはない。ナノ秒パルスの適用に続いて細胞内の内容物における細胞自滅が誘起され、細胞の生存度（例えば再生能力）に影響を及ぼす。

【００３６】

一般的に、電気穿孔は、電極の組あるいは電極の列を活性化させて電界を生じさせるように構成された装置を用いて達成することができる。そのような場は，多極、双極、あるいは単極の電極配置において発生させることができる。細胞に印加されると、印加されたパルスの持続期間および強度に応じて、この場は、細胞膜の透過化を増大させるように作用し、そして，１）細胞脂質二重層に孔が形成されるようにして短い期間の間細胞膜を可逆的に開き，様々な治療上の成分あるいは微粒子が侵入できるようにし，その後、エネルギーの印加が停止すると、細胞を殺すことなく孔が自然発生的に閉じるか、あるいは，２）より高い強度（より長い、より高いエネルギー）のパルスを用いて，不可逆的に細胞膜を開きあるいは孔を開けて細胞の不安定性を生じさせ、細胞死を引き起こすか，あるいは、３）ナノ秒パルスのエネルギーを印加して、細胞膜の不可逆的な穿孔を生じさせることなく、細胞自滅および細胞死につながる細胞内の基質の破壊を引き起こす。Weaver，Electroporation: A General Phenomenon for Manipulating Cells and Tissues Journal of Cellular Biochemistry，51 : 426-435 (1993)によって特徴づけられるように、短い（１－１００マイクロ秒）およびより長い（１～１０ミリ秒）パルスが様々な型の細胞電気穿孔を生じさせる。なお、この文献の全体がこの参照によって本願明細書に組み込まれるものとする。単一の細胞モデルにおいては、ほとんどの細胞は、細胞全体に印加される１～１．５Ｖの範囲（膜電位）において電気的な穿孔を呈する。細胞容積に電気穿孔を適用するために、１０Ｖ／ｃｍ～１０，０００Ｖ／ｃｍおよび１．０ナノ秒～０．１秒にわたる

パルス持続時間を印加することができる。

【００３７】

ある種の要因は、供給された電界が目標を定めた細胞にどの様に作用するかについて影響を及ぼすが、これらの要因には細胞のサイズ、細胞の形状、印加された電界に関する細胞の配向、細胞の濃度、細胞間の距離（細胞と細胞の分離）、細胞の種類、組織の不均一性、細胞膜の特性などが含まれる。より大きい細胞は、損傷に対してより脆弱であり得る。例えば、骨格筋細胞が、すぐ近くの結合組織細胞よりも電気的な損傷の作用を受けやすいことが指摘されている（Gaylor el al. Tissue Injury in Electrical Trauma. J. Theor. Biol. (1988) 133, 223-237)。なお、その全体がこの参照によって本願明細書に組み込まれるものとする。脂肪組織あるいは脂肪細胞は、それらの断熱的な特性に起因して損傷に対し脆弱ではないため、細胞膜が損傷の作用を受けやすくするためには前処理あるいはエネルギーを印加する間の処理が必要である。

【００３８】

この領域における研究によると、低張溶液は人間の脂肪細胞のセル直径をかなり増大させることができる。注入から１５分以内では、４分の１の通常生理食塩溶液がセル直径に対してかなりの効果を有することが既に報告されている。低張溶液を超音波脂肪吸引と共に使用することの科学的な根拠は、(Jennifer M. Bennett, MS, abstract presented at Plastic Surgery 2004)に記載されている。例えば、脂肪細胞が本発明の標的組織である場合には、低張塩水のような溶液をその領域に注入する必要があるが、それは翻って脂肪細胞の腫大を生じさせて細胞膜上の応力の増加を引き起こし、電気穿孔あるいは超音波エネルギーの印加または他のエネルギー形態の印加によってより破壊の作用を受けやすくする。そのような増強効果は、細胞サイズの変化、増大した細胞伝導率、増大した細胞外伝導率、増大した壁応力であり、増大した透過性につながる。加えて、塩水、カリウムおよび他の溶液成分の濃度の変更は細胞膜の透過化に影響を及ぼす。

【００３９】

それに加えて、細胞は、印加された場の中でどのように方向付けられているかによって、より損傷の作用を受けやすくなる。例えば、非球形細胞の長軸が電界に沿って方向付けられていると、より破壊の作用を受けやすい（Lee et al. Electrical Injury Mechanisms: Electrical Breakdown of Cell Membranes, Plastic and Reconstructive Surgery, November 1987, 672-679）。なお、この文献の全体がこの参照によって本願明細書に組み込まれるものとする。例えば、本発明の前後関係においては、結合組織の方向付けに応じて、場の方向によっては印加されたエネルギー場の作用を受けやすくなる。使用するパルス発生器、あるいは所望の効果に応じて電気穿孔を達成するために正弦波のＡＣパルス、ＤＣパルス、方形波パルス、指数関数的に減衰する波形、組み合わせられたＡＣ／ＤＣパルス、あるいはCell Poration and Cell Fusion using an Oscillating Electric Field, Biophysical Journal October 1989, Volume 56 pgs 641-652のChangに記載されているＤＣシフトされたＲＦ信号のような他のパルス波形を含む、パルスの様々な波形あるいは形状のパルスを適用することができる。なお、上記の文献の全体がこの参照によって本願明細書に組み込まれるものとする。印加されるエネルギーのパラメータは変更することができるが、それらには以下の全てあるいはそのいくつかが含まれる：波形形状、振幅、パルス持続時間、パルスの間隔、パルスの数、波形等の組合せ。本発明の電気穿孔カテーテルシステムは、Cytopulse Sciences, Inc.（Columbia, メリーランド州）、あるいはGene Pulser Xcell (Bio-Rad, Inc.)、IGEA（Carpi、イタリア）、またはInovio（San Diego、カリフォルニア州）から入手可能な、表面電極あるいはカテーテル電極のようなエネルギー印加装置に電気的に接続されたパルス発生装置を備える。この発生装置は、不可逆性の電気穿孔を引き起こすべく、より高い電圧、増大したパルス電気容量あるいは他の変更を生じさせるように変更することができる。一つの実施形態において、この発生装置は、電界(e-field)がより長くとどまり、それによって脂肪組織の細胞電気穿孔が高められ、あるいはまた筋組織の破壊が最小化されるように、その電流を制限することができる。

【００４０】

本発明の一実施形態によると、所望の効果に応じて、様々なエネルギー形態の適用と共に様々な治療促進剤５４を用いることができるが、そのいくつかについては以下に詳述する。例えば薬剤は、治療装置から直接的にあるいは遠く離れた注射部位から、静脈内供給を含めて、経皮的にあるいは皮下注射によって伝達することができる。治療促進剤には、リドカインのような麻酔薬、エピネフリンのような血管収縮の薬剤、低張塩水、カリウム、撹拌された塩水、微小な泡、商業的に入手可能な超音波造影剤、微小球体、脂肪細胞、脂肪、自己由来の組織（例えば、身体からの敵対的な反応を最小化するための組織移植片を形成するきれいな脂肪細胞を生み出す崩壊された脂肪細胞）、ＰＬＬＡ、ヒドロキシアパタイト(hydroxyappetite)が含まれる。治療促進剤は、本発明のエネルギー印加治療の前に、間に、あるいは後に供給することができる。

【００４１】

本発明の装置は（皮膚表面あるいは表皮１０２に対して）非侵襲的に適用されるもの、（表皮表面１０２の下の約３～１０ミリメートル下方の肌を介した）より侵襲的でないもの、および（深部皮下領域１０６および深部脂肪層１１０に対して約８ミリメートルあるいはより深い）最小限に侵襲的なもの、を含む。所望の効果に応じて、選択されたエネルギーおよび電極の設計は、効率よく目標が定められた組織のタイプに影響を与える開示のために、ある種のエネルギー形態および電極を組み合せるが、本発明の範囲を制限することは意図していない。

【００４２】

ここで図２を参照すると、本発明の一実施形態に係る装置３０は、ハウジング３２および中央治療要素３４を有している。ハウジングと中央治療要素の間には環状領域３６が配設されている。この環状領域は、ハウジングから中央治療要素までの寸法が約５～２０ミリメートルの開口３８を有している。一つの実施形態においては、中央治療要素はハウジングの内部に回転自在に接続されたローラとして構成され、ハウジングが肌の表面１０２（図１）上を移動するときに回転できるようにしている。さらに他の実施形態においては、中央治療要素は、ハウジングの内部に部分的に例えば約５～３０ミリメートルにわたって埋め込まれるが、皮膚表面に当てられると肌を押して電気的な接続のためのより良好な接触をもたらすように充分な距離で延びる。一つの実施形態においては、中央治療要素あるいはハウジングが電極となり、患者の身体のどこかに接地パッド（図示せず）の形態でアース（図示せず）が配置され、あるいは、ハウジングおよび中央の治療要素の両方が二極性のシステムを形成する活性電極となる。一つの実施形態においては、ハウジングおよび中央治療要素の両方が、電力が供給されている間にほぼ同時に肌あるいは表皮１０２に接触する。後に詳述するように、環状領域に関連させて管腔を挿入し、この装置を吸引性の管腔に接続することにより、この装置を肌に当てるときに吸引できるようにすることが有益である。例えば、少なくとも一つの実施形態において、医療的な吸引あるいは負圧を環状領域３６に接続し、目標領域１００（図１）とこの装置３０が互いに引っ張り合うようにする。このようにして、肌あるいは表皮１０２との接触が維持されて所望の加圧が達成される。治療装置による様々な組織層の加圧は、治療効果を達成するために必要なエネルギー量に影響を与える。

【００４３】

中央治療要素３４あるいはハウジング３２は、多くの形状に構成することができる。少なくとも一つの実施形態において、中央治療要素３４は円柱、環状体、楕円等として形付けることができる。ある用途において、治療要素の一つの領域にエネルギーを供給して集中させるときには、少なくとも一つの曲率半径を有する幾何学的形状が「エッジ効果」を最小化するために望ましい。

【００４４】

ここで図３を参照すると、本発明の他の実施形態は、目標とする組織１００の領域のいずれかの側に配置されたクランプ４０を含んでいる。一つの実施形態において、このクランプは、表皮１０２と接触する第１電極４１および第２電極４２を有した二極性の構造に構成されている。治療する皮下組織１０６は、これらの電極の間に配設される。第１電極

が電圧を供給し、第２電極はアースである。

【００４５】

ここで図３Ｂを参照すると、クランプ腕あるいは電極４０の鋭い縁部における「エッジ効果」すなわち電流の集中が増大したエネルギー密度を呈するので、より一様なエネルギーの供給が最も有益である本発明の所期の効果にとっては望ましくない。エネルギーのより一様な供給は早すぎたインピーダンス上昇の可能性を減少させて、供給されるエネルギーの総計および持続期間あるいは表皮１０２（図１）のような取り囲んでいる構造への意図しない組織損傷を減少させる。

【００４６】

図４は、本発明の他の実施形態の断面を表しているが、略円柱状の要素５１，５２を有したクランプ５０が採用されて、「エッジ効果」を少なくするとともにより一様な電流を印加するようになっている。この実施形態においては、クランプの腕５１が活性電極（アクティブな電極）として、かつクランプの他の腕５２がアースとして示されている。しかしながら、実際には、両方のクランプアーム５１、５２を活性電極およびアース（図示せず）として、治療する領域１００の近傍にあるいは治療する領域から離して患者の組織上に配置することができる。

【００４７】

図５Ａは、形状が環状で球面の直径が例えば４５ミリメートルである中央治療要素３４を用いた単極構造の図２の装置３０の適用を示している。この実施形態においては、中央治療要素は正に帯電した活性電極であり、所望の標的組織は皮下脂肪１０６および線維性のセプタム１０８および筋肉層まで至る深部脂肪１１０（図１）を含む結合組織である。中央治療要素として様々な直径、例えば１０ミリメートル～５０ミリメートルの球形を用いることができる。ここで図５Ｂを参照すると、中央治療要素の曲率半径により、皮下の層１０６、１０８、１１０（図１）の内部に目標が定められたエネルギーに加えて「エッジ効果」は存在していない。

【００４８】

例示的な意味では、図２Ａ～図５Ｂに描かれている装置は様々なエネルギー源を用いて利用することができるが、実際には前述したような電気穿孔発生装置を用いる。５～２０００ボルトの範囲で、目標を定める組織の厚みおよび細胞のタイプに応じて５０～１０，０００Ｖ／ｃｍの範囲、例えば１００～３，０００Ｖ／ｃｍの範囲の電界強度の様々な電力を供給することができる。そのようなエネルギーの供給はまた、目標組織に対する破壊的な効果を最大にする一方で筋収縮を最小化するためにパルスとしあるいは切替えることができる。

【００４９】

本発明のエネルギー印加装置は、本願明細書の他の部分で詳述する注射可能な促進剤５４と共に用いることができる。ここで図６を参照すると、本発明の少なくとも一つの実施形態は、治療促進剤５４の皮下注射と共に用いられる中央治療要素３４を有した、非侵襲性のエネルギー供給システムを含んでいる。この実施形態においては、エネルギー供給システム３３は上述した電気穿孔発生装置であり、中央治療要素３４が電極であるが、それはSiemens/Acuson（Malvern、ペンシルバニア州）によって製作されるシステムのような超音波振動子に作動的に接続される超音波発生装置とすることができる。注入は、皮下脂肪１０６、深部脂肪１１０（図１）、線維性のセプタム１０８あるいは破壊する他の結合組織を含む破壊すべき皮下構造の任意の位置に目標を定めることができる。このシステムは、皮膚表面から印加されたエネルギーに接触すると激増する泡やその他の形態の増大したエネルギーポテンシャルを治療部位に生み出すために、注入の前に溶液を「泡立たせ」あるいは撹拌する注射器５６を含むことができる。

【００５０】

図７Ａ～７Ｂおよび図８Ａ～図８Ｃを参照すると、本発明の更なる実施形態においては、ハンドピース２６８は、患者の皮膚表面に追従するパッド６０を含んでいる。このパッドは、そこから延びる複数の極微針（マイクロニードル）６２を含むとともに、リザーバ

６４と連通している。この装置は、空気あるいは流体によって膨張し、患者の肌の皮層を介して極微針を配置させる、ブラダのような作動要素６６を更に備えている。肌を介した針の挿入は目標組織の抵抗を実質的に減少させ，目標組織を，印加されたエネルギーの作用をより受けやすいものとする。極微針は、治療する目標組織に応じて０．５ミリメートル～２０ミリメートルの距離で肌の内部に延びるが、いずれの場合も角質層を通過する。例えば、セルライトを治療するためには１～５ミリメートルの針入深さが望ましいが、より深い皮下脂肪のためには３～２０ミリメートル、例えば５～１０ミリメートルの深さが望ましい。一つの実施形態においては、肌を不必要な組織損傷から保護するために極微針の作動部分以外は絶縁され、例えば最初の０．５ミリメートル～１ミリメートルは絶縁体を支持することができる。さらに他の実施形態において、針は完全に絶縁することができる。別の実施例では針は絶縁されない。極微針は、上述した電気穿孔発生装置あるいは超音波発生装置のようなエネルギー源３３（図６）に作動的に接続することができる。さらに、極微針を介して治療促進剤５４を注入することができる。

【００５１】

極微針６２は、列の間で二極式とすることもできるし、あるいは患者のどこかに配置された接地パッド（図示せず）と共に単極式に作動させることもできる。ラスター走査の仕方で電力を印加して、様々な対あるいは対のセットをある間隔で活性化させることができる。極微針の列の間の間隔は、最大磁界が均一となるように、例えば０．５～５．０ミリメートルの範囲の間隔に設定される。

【００５２】

さらに他の実施例においては、ハンドピース２６８のベース２６６は、大気より低い圧力を用いて患者の肌１０２をベースに向かって上方に吸引するための吸引部材２６４を含むことができる。この吸引部材は、機械ポンプ（図示せず）、ハンドポンプ（図示せず）あるいは大気より低い圧力の他の供給源に接続できる、少なくとも一つの吸引管２７０を含んでいる。

【００５３】

一つの実施形態においては、肌１０２は，肌に吸引を負荷する前にハンドピース２６８の外に配置されている針６２に向かって上方に吸引される。その後、肌に吸引が負荷されると、肌はハンドピースのベース２６６に向かって上方に吸引され、針は治療する患者の少なくとも表皮１０２を貫通する。他の実施形態においては、ハンドピースは第１の状態で患者の上に配置されるが、このときには針の遠位端はハンドピースの内部にある。それから、ハンドピースのベースに対して肌を上方に引っ張るために吸引が負荷される。その後、針の遠位端がハンドピースの外側にある第２の状態に針を配置すると、針は治療する患者の少なくとも表皮を貫通する。一つの実施形態においては、針の遠位端は注入部材から自動的に配置される。第１の状態と第２の状態との間での針の移動は制御装置によって制御される。少なくとも一つの実施形態においては、第１の状態と第２の状態との間での針の自動的な配置のために，モータをハンドピースに含めることができる。

【００５４】

図８Ａ～図８Ｂは、治療促進剤５４を注入できるとともに，皮層１０４（角質層）を通って治療が望まれる皮下層１０６，１０８，１１０（図１）の内部へと延びるように構成された、一連の極微針６２を示している。例えば、本発明による極微針６２を介したエネルギーの印加は、皮下層のセプタム１０８を破壊することができ、エネルギー支援のサブシジョンおよびそれに続く肌の平滑化を生じさせる。加えて、極微針は、その直径および針入の深さに応じて、皮下脂肪１０６の細胞を破壊するために，治療促進剤が細胞に入ってその機能を破壊することができるように細胞膜の透過処理を生じさせるのに十分な、あるいは細胞死に結びつく不可逆性の電気穿孔を生じさせるのに十分なエネルギーを供給することができる。図８Ｂは、治療促進剤５４を注入できる追従可能なパッド６０あるいはリザーバ６４上にある極微針６２の配列を描いている。一つの実施形態においては、針は二極式の構造に配置することができる。他の実施形態においては、針が単極式の構造に配置され、かつ接地パッドが治療する組織から間隔を開けて患者に装着される。

【００５５】
環状体電極５１、５２およびクランプ電極４１（図２～図６）を極微針６２と共に構成することは本発明の範囲内であるが，この極微針６２は、ユーザーによって、または装置３０の環状領域３６（図２）あるいは吸引部材２６４に負荷される負圧によって患者の肌の皮層１０４に押し込まれる。さらに、ユーザーが治療することを望む距離および位置に極微針を置くことができるようにすることは有益である。この際、それによってユーザーが別々の針６２を配置できるテンプレート９０（図１５）を設けるとともに、選択された配置に応じたエネルギーのアルゴリズムを提供することは、本発明の範囲内である。
【００５６】
ここで図９を参照すると、本発明の他の実施形態においては、針６２、電極７２あるいは電極列７４を配置するように構成されたカテーテルデバイス７０を、肌１０２、１０４を通して目標である皮下構造１０６、１０８、１１０に挿入するために設けることができる。例えば、扇形に広がった電極配列７４を複数の延伸要素あるいは枝６２、７２と共に設けることができる。
【００５７】
枝６２、７２は、メインカテーテルシャフト７６を介して肌１０２、１０４を通して配置することができ、実質的に皮膚表面１０２と水平（平行）な配向で「扇形に展開する」、枝がまた電極７２である実施形態においては、枝を皮膚表面に実質的に平行であるように配置してエネルギーを印加すると、皮下脂肪１０６あるいは線維性のセプタム１０８のような皮下の構造を破壊することができる。複数の枝を用いると、今日の装置によって予測されるよりも大きな領域をより短い時間で治療することが可能である。電極装置７０の枝は、治療促進剤５４の注入を可能にするために中空に構成することができる。中空の枝は、その全長に沿ってそしてその遠位端７９に複数の流出口７８を有することができる。
【００５８】
一つの実施形態においては、扇形に広がる枝の配列７４は、第１の近位端７６ｐ、皮下組織への挿入のために適合した第２の遠位端７６ｄ、およびそれらの間で長手方向に配設されたチャネル７６ｃを有した，筒状要素７０を含むことができる。第１の近位端（図示せず）および第２の遠位端７９を有した複数の伸長可能な細長い要素７２、７４は、チャネルの中に配設されるとともに、チャネルの内部に引き込まれた第１の状態からチャネルの外に延びる第２の状態へと動くことができ、細長い要素の遠位端は延び出た状態においては引き込まれた状態よりも互いに離れている。一つの実施形態においては、高周波メスをこの配列に用いることができる。さらに他の実施形態においては、機械的なメスあるいは切断要素をこの配列に用いることができる。
【００５９】
ここで図１０を参照すると，本発明のさらに他の実施形態においては、枝はエネルギーを供給しない単に鋭利な切断要素８０であるが、これらの枝を皮膚表面１０２に平行に配置してカテーテルシャフト７６の縦軸７７（図９）の周りに回転させ、あるいは肌に対して実質的に平行な配向で引き込ませると、この装置７０は一度の回転あるいは引き込みにおいて複数のセプタム１０８を効率的に破壊することができる。さらに他の実施形態においては，少なくとも一つのカテーテルシャフト７６を、治療する組織の内部への治療促進剤５４の注入のために構成することができる。さらに他の実施形態においては，針の先端の幾何学的形状は，特定の組織を破壊する効果のためのエネルギー場を形作る構成とすることができる。
【００６０】
ここで図１１を参照すると、さらに他の実施形態においては，作動要素８０、例えば切断要素をカテーテルシャフト７６の中心軸７７に対して鋭角に配置することができる。この装置の作動領域８０は、カテーテルシャフトに挿入するために折り畳むとともに，皮下のスペース１０６、１０８、１１０に配置するときには伸張させることができる。切断する状態に配置されると、図１１に示したように、カテーテルシャフトは皮膚表面１０２に平行に方向付けられ、装置７０を引き戻すと、そのチャネルにおいてセプタム１０８を捕

掘して切断する。装置７０の作動領域８０は、例えば、鈍い解剖器具、機械的なカッター、あるいはエネルギー支援された装置とすることができる。高周波エネルギーあるいは電気抵抗の熱エネルギーを含む、任意の適用可能なエネルギーの物理療法を利用することができる。

【００６１】

ここで図１２～図１４を参照すると、少なくとも一つの実施形態においては，皮下注射用針６２あるいは電極７２を組織破壊装置３０と共に用いることができる。一つの実施形態においては、組織破壊装置３０、例えば図２～図６に示して上述した装置のような、ハウジング３２および転動する中央治療要素３４、クランプ４０あるいはトロイド形の電極５０と共に、扇形に広がる電極７４が配置される。さらに他の実施形態においては、扇形に広がる電極７４を、装置３０、例えば転動する中央治療要素３４とは独立させて配置することができる。

【００６２】

一つの実施形態においては、線維性のセプタム１０８のような結合組織に目標を定めるために、それらが生み出す電界を有利に配置できるように、扇形に広がる針電極７４を方向付けることができる。図１２～図１３を参照すると、少なくとも一つの実施形態においては、中央治療要素３４が正に帯電し、かつ針電極６２、７２、７４は負に帯電する。図１３に示した一実施形態は、トロイド形の中央治療要素３４の中心を通って扇型の電極７４の配備を含めることができる。扇形に広がる電極は、治療する組織のエネルギーによる破壊を助けるために機械的に回転させることができる。図１４に示した他の実施形態は、ハウジング３２の内部に配置されるとともにトロイド形の中央治療要素３４の周縁に配置された、真っ直ぐな針電極６２、７２を含むことができる。これらの針は，電界線がセプタムに対して垂直にあるいは平行に方向付けられるように皮下に形付けられあるいは構成され、セプタムは電気的に崩壊させられる。図１４を参照すると、針電極６２、７２は、その近位側が電気的に絶縁されるとともに、電気的に活性な遠位端が露出している。少なくとも一つの実施形態においては，中央治療要素３４が負に帯電し、かつ針電極６２、７２、７４が正に帯電する。ここで図１４Ａを参照すると、正に帯電する中央治療要素３４とそれを取り囲んで負に帯電している電極６２、７２、７４との間の距離「Ｄ」は、形状に治療する組織に対する破壊的なエネルギーの分布を形付けるために変更することができる。

【００６３】

ここで図１５を参照すると、少なくとも一つの実施形態においては、ハウジング３２は、真っ直ぐな針電極６２、７２の挿入を案内するチャネル３５を有したテンプレート９０として構成することができる。様々なサイズのテンプレートを設けることができ、それによって針電極の様々な挿入パターンが可能となる。これらのテンプレート９０は、瘢痕化した領域、あるいは重症なセルライトの場合には特定の凹みあるいは凹みの集合体といった、特定の領域に焦点を合わせたサイズとすることができる。大型のセルライトの凹みはより大型のテンプレートで治療することができ，より小さいセルライトの凹みはより小さいテンプレートで治療することができる。エネルギーは、患者を治療するために用いる特定のテンプレートに合わせて調整することができる。

【００６４】

一つの実施形態においては，中央治療要素３４は、有効な治療領域を最大化するために、少なくとも一つの針電極６２、７２と共に作用することができる。さらに、針電極は、装置３０のハウジング３２の周囲に配置して、一緒にエネルギーを印加し，あるいは多重化することができる。ここで図１６を参照すると、少なくとも一つの実施形態においては、中央治療要素を正に帯電する電極として構成し、かつ周囲に分配される複数の針電極７２を負に帯電する電極として構成することができる。このような極性は、単なる例示であって，供給されるエネルギーのタイプおよび所望の効果に応じて電極の極性を切り替えあるいは変更できることは理解されなければならない。ユーザによる電極７２あるいは針６２の配置を案内するために、テンプレート９０を用いることができる。先に言及したよう

に、治療する組織の望ましい容量に応じて、様々に異なって寸法決めされかつ形作られたテンプレートを提供することができる。

【００６５】

ここで図１６をより詳しく参照すると、一つの実施形態においては、中心電極３４から連続的にエネルギーを供給することができるが、周囲の接地電極７２Ａ～７２Ｒは時間的な順番で活性化される。したがって、周辺電極７２Ａ～７２Ｒは順番に活性化される。このことは、エネルギー供給を一定にすることによって筋肉刺激を減少させるとともに、単一の接地電極の高いインピーダンスに起因して供給される総エネルギーを減少させる。各組織部分にはわずかな時間だけエネルギーが印加され、それによって組織の加熱および温熱損傷を最小化する。この電極配列が治療領域全体の上でゆっくり移動すると、低エネルギーの治療となる。一つの実施形態においては、中央の正電極とそれを取り囲んでいる周辺電極との間の距離は１０．０ミリメートルである。少なくとも一つの実施形態においては、エネルギーが１０オーム、２００ボルト、０．５アンペアあるいはまた１００ワットで供給される。さらに他の実施形態においては、２０分の１のデューティーサイクルが一つの領域に用いられる。さらに他の実施形態においては、より高いインピーダンスおよびより低い電力が用いられる。

【００６６】

ここで図１７Ａ～図１７Ｂを参照すると、本発明のさらに他の実施形態においては、超音波エネルギーを印加することによって皮下の構造を崩壊させるために、超音波装置１２０、例えばハンドピース１２２および治療シャフト１２４を有した超音波カテーテルが用いられる。この超音波装置は、例えば高周波メスを含み、あるいは針カニューレの先端に超音波振動子を取り付けることができる。この装置１２０は、治療シャフトの開口１２５あるいは別個の注入装置５６（図６）を介した、治療領域、例えば皮下脂肪１０６に向けての治療促進剤５４の注入と共に用いることができる。エネルギー印加の前における治療促進溶液の注入を保証するために、選択的な制御装置１２８をいることができる。さらに、治療領域に微小な泡１３２（撹拌した塩水等）を注入するために、上述したものに類似した注入および泡立ち装置５６，１３０を用いることができる。一つの実施形態においては、高周波針あるいは超音波治療シャフトは、治療する皮下組織あるいはセルライト凹みの下方で前後方向に動かされるように構成する。

【００６７】

少なくとも一つの実施形態において、本発明は、哺乳類の患者の皮下構造１０６、１０８（図１）を崩壊させる装置を含む。この装置は、その表面に配設された１つ若しくは複数のエネルギー伝達部材３４、４０、５０あるいは電極７２、７４を有する印加装置３０、７０（図２、図９）を備えることができる。一つの実施形態において、この印加装置はカテーテル７０（図９）として構成される。電極は、電気パルスを伝達するように構成される。この装置は、印加装置に作動的に接続されるとともに約１０Ｖ～３０００Ｖの電気パルスを供給するように構成されたパルス発生器３３（図６）を更に備える。印加装置および発生装置は、膠原性の皮下構造，例えば線維性のセプタム１０８を破壊するように構成することができる。

【００６８】

他の実施形態（図９～図１３）においては、この印加装置は、治療する皮下の構造１０６，１０８に隣接する領域へと哺乳類の患者の肌１０２、１０４を介して挿入されるように構成されたカテーテルデバイス７０である。このカテーテルあるいは印加装置は、治療する目標膠原性構造１０８に対しある角度に配置することができる。

【００６９】

少なくとも一つの実施形態（図４）において、この印加装置５０は、少なくとも一つの曲率半径および少なくとも一つの表面を有したトロイド形の形状を有する。

【００７０】

再び図２を参照すると、さらに他の実施形態において、この印加装置３４は，ハウジング３２の内側に取り付けられるとともに、ハウジングに対して動くように構成される。さ

らに他の実施形態においては、ハウジングが活性電極であり、この印加装置がリターン電極あるいはアースである。他の実施形態においては、ハウジングがリターン電極あるいはアースであり、この印加装置が活性電極である。一つの実施形態において、この印加装置は、ハウジングに回転自在に接続されて複数の方向に回転できるようになっている。

【００７１】

再び図７Ａ～図８Ｃを参照すると、他の実施形態においては、この印加装置の少なくとも一つの表面は、哺乳類の患者の肌を貫通できる極微針６２を更に含む。これらの極微針は、エネルギー伝達要素を含むことができる。さらに他の実施形態において、この印加装置は、追従可能なパッド６０として構成される。この追従可能なパッドは、哺乳類の患者の肌１０２、１０４を貫通できる、そこから延びる極微針を更に含む。この印加装置は、１つ若しくは複数の電極が、哺乳類の患者の肌を貫通することができる極微針を含むように構成することができる。

【００７２】

さらに他の実施例において、本発明はまた、哺乳類の身体の肌の凹凸の一因となる皮下構造を選択的に破壊する方法を含む。この方法は、第１電極４１および第２電極４２を有したエネルギー伝達装置を提供することを含む。第１および第２の電極の間に電界を生み出すように構成された、パルス発生器３３が提供される。このエネルギー伝達装置は、治療する皮下組織１０６、１０８に隣接した領域に配置され、皮下構造を破壊するために少なくとも一つの細胞の透過化を生じさせるべく、この皮下構造に細胞レベルでエネルギーを与える。一つの実施例において、この細胞の透過化は可逆的である。他の一実施例において、この細胞の透過化は不可逆的である。さらに他の実施形態において、不可逆的な細胞の透過化は、細胞内の基質の細胞自滅の生成を介して達成される。

【００７３】

再び図６を参照すると、さらに他の実施形態において、本発明の皮下組織を治療する方法は、治療促進剤５４を準備し、第１電極３４と第２電極３２の間の電界活性化と共に例えば注射器５６により治療促進剤を供給することを含む。治療促進剤は、リドカインのような麻酔薬、エピネフリンのような血管収縮薬、低張溶液、低張塩水、カリウム、撹拌された塩水、微小な泡、あるいはまた微小球体、リドカイン、あるいは脂肪性溶液を含む。

【００７４】

なお他の実施形態において、セルライトを治療する方法は、患者の皮下領域にある線維性セプタム１０８の細胞への局所的なエネルギーの供給を含む。このエネルギーは、セプタムを破壊するのに十分な程度に線維性セプタムの細胞膜を透過化させるために、選択された条件の下で細胞に供給される。

【００７５】

再び図１２を参照すると、少なくとも一つの実施形態において、哺乳類の患者の皮下構造を破壊するための装置は、その表面上に配設された１つ若しくは複数のエネルギー伝達部材３４を有する印加装置３０を備え、このエネルギー伝達部材はエネルギー場を伝達するように構成されている。エネルギー場の伝達と共に、治療促進剤５４を治療する組織１００に付加することができる。エネルギー伝達部材および治療促進剤は、膠原性の皮下構造１０８を破壊するように作動する。この皮下構造は、印加装置に対し実質的にある角度で方向付けることができる。

【００７６】

本願明細書において議論する方法および装置は、肌の凹凸を治療するための、および過剰な脂肪組織、セルライトおよび瘢痕化といった他の疾患を治療するための、哺乳類の身体における皮下構造１０６、１０８の破壊あるいはまた破壊にとって有益である。この装置および方法は、エネルギーを伝える印加装置、極微針、カテーテル、および肌を介した非侵襲的な、肌を介したより侵襲的でない、あるいは最小限に侵襲的な皮下アプローチによる治療を適用するための皮下治療装置を含む。この分野の公知でありかつ本願明細書において議論する様々な薬剤は、皮下組織を治療するためのこれらの手技を支援しあるいは改良する。

【００７７】
一つの実施形態において、本発明は、軟組織を治療するための装置を含む。他の実施形態において、本発明は、線維組織を治療するための方法を含む。一つの実施形態において、本発明は、脂肪細胞およびセプタム１０８を含む皮下脂肪層１０６を治療するための方法および装置を更に含む。一つの実施形態において、本発明は、セルライトを治療するための方法および装置を更に含む。本発明は、セルライトの外観の一時的な減少、あるいはセルライトの恒久的な減少のために有益である。本発明はまた、脂肪吸引の補助的な手段として用いることができる。さらに本発明は、セルライトの外観を一時的に改善するための、皮下への流体の注入および分散を提供する。本発明はまた、良性新生物、例えば脂肪腫の除去のために有益である。

【００７８】
少なくとも一つの実施形態において、本発明は、標的領域の美的な外観を改善するために、コラーゲン、結合組織、脂肪組織（脂肪細胞）等といった皮下の構造（あわせて「標的組織」あるいは「皮下構造」）に目標を定めて破壊する方法および装置を指向している。この標的領域は、人体において改善が望まれる、顔面、あご、首、胸部、乳房、腕、胴、腹部（骨盤領域を含む）、大腿、臀部、膝および脚部を含む任意の表面あるいは輪郭から成る。目標とする組織には、その領域の結合組織あるいはセプタム、または皮下およびより深い脂肪の沈澱あるいは層のような、その下に横たわっていて望ましくない身体の輪郭を悪化させ得る組織が含まれる。肌の凹凸は、セルライトや瘢痕化、あるいは首、あご、乳房、尻、腹部、腕等の領域における脂肪の沈澱あるいは過剰な脂肪といった、外側の様相に対する人の満足感を減少させる状態を指す。

【００７９】
本願明細書において使用する促進剤５４という用語は、外因性のガス、液体、混合物、溶液、化学薬品のうちの少なくとも一つ、または組織に適用されたときにエネルギー供給システム３３の破壊的な生物学効果を改良する材料を指す。促進剤の一つの実例は、促進溶液である。一つの実施形態において、この促進溶液は、外因性の気体、例えば微小な泡１３２を含む。促進剤あるいは促進溶液は、例えば、塩水、通常生理食塩溶液、低張塩水、低張溶液、高張液、リドカイン、エピネフリン、膠質性溶液、あるいはまた微小な泡溶液を含むことができる。他の促進剤は、本願明細書において更に詳細に説明される。一つの実施形態において、本発明は、促進溶液を撹拌しあるいはまた混合するように構成された撹拌システム５６、および溶液を注入するように構成された注入部材５６、１２２を備える組立体である。少なくとも一つの実施形態において、この組立体は、また、溶液を格納するための容器、例えばその内部に溶液を格納するためのリザーバ６４を備える。このリザーバは、従来技術において周知の点滴バッグとすることができる。

【００８０】
ここで図１８を参照すると、一つの実施形態において、組立体２００はエネルギー供給システム３３を備える。医師が促進溶液２１０を調製して吊り下げると、この組立体は、前もってプログラムされたあるいはユーザが定めたアルゴリズムに基づいて混合し、注入し、かつ治療する組織にエネルギーを付加する。このアルゴリズムは、制御装置２２８にプログラムすることができる。この制御装置は、他の構成部分を含む単一構造の組立体に含めることもできるし、あるいはこの組立体の他の構成部分と連絡するように構成された別個のユニットとすることもできる。少なくとも一つの実施形態において、この制御装置はプロセッサおよびメモリーを含む。少なくとも一つの実施形態において、この制御装置は、また、入力装置２３６、例えば電気スイッチ、ボタン、あるいはキーパッドを含むことができる。少なくとも一つの実施形態において、この制御装置はまた、出力装置２３８、例えば従来技術において周知のＬＥＤライト、液晶画面、計器、あるいは他のスクリーンおよび出力表示器を含むことができる。他の実施形態において、入力装置２３６および出力装置２３８は制御装置から分離することができるが、制御装置と電気的に通信する。組立体は、促進溶液２１０をリザーバ２２０から撹拌機２０８へと搬送し、そこにおいて溶液が混合されかつ撹拌されるように構成される。撹拌機２０８は単一構造のハンドピー

ス２４２に含めることができる。組立体は、その後、注入部材２１４を用いて患者に溶液を注入するように構成される。組立体はまた、ハンドピースに含まれるエネルギー供給装置２０４を用いて、治療のために注入した組織１００にエネルギーを印加するように構成される。このハンドピースは、中央治療要素３４を有したハウジング３２、例えば図２に示した組織破壊装置３０として構成することができる。一つの実施形態においては、少なくとも一つの皮下注射針６２が溶液注入部材２１４に配設される。さらに他の実施形態において、溶液注入部材は、格納式の針６２と共に構成することができる。

【００８１】

本発明はまた、患者の皮下脂肪１０６に対する皮下注射に対して生体適合性を有した様々な治療促進剤５４を含む。一つの実施形態において、溶液は腫脹性の溶液である。腫脹性の溶液は、局所麻酔の適用をもたらすために特に適合させたものであり、周知の技術である。腫脹性の溶液は、様々な医薬用溶液を含むことができる。腫脹性溶液の一つの実施例は、２％のリドカインを含有した１０００ｍｌの通常生理食塩溶液、３０ｍｌ（６００ｍｇ）のエピネフリン、および１モル（１２、５ｍｌあるいは１２、５ｍｇ）の重炭酸ナトリウムを含む溶液である。腫脹性溶液の少なくとも一つの他の実施例は、１０００ｍｌの通常生理食塩溶液、５０ｍｌの１％のリドカイン、１ｃｃの１：１０００エピネフリンを含む溶液である。これらの添加物は商業的に入手可能である。腫脹性溶液は、治療部位の出血を減少させるとともに、手技の間および後における痛みを減少させる局所麻酔効果を提供する。

【００８２】

一つの実施形態において、促進溶液５４は正常食塩溶液である。さらに他の実施形態において、促進溶液は低張溶液である。さらに他の実施形態において、溶液は微小な泡あるいはナノサイズの泡を含む溶液である。この溶液は、微小な泡を含む溶液を生じさせるために、２つの注射器の間で１回若しくは複数回撹拌される。本願明細書の他の部分で詳細に説明するように、微小な泡あるいはナノサイズの泡を含むいくつかの溶液は商業的に入手可能である。

【００８３】

促進剤は所望する効果に応じるが、その幾つかは以下に詳述される。例えば促進剤は、経皮的にあるいは治療する組織への注入により伝達することができる。治療促進剤には、リドカインのような麻酔薬、界面活性剤、エピネフリンのような血管収縮の薬剤、低張塩水、カリウム、撹拌された塩水、微小な泡、商業的に入手可能な超音波造影剤、微小球体、脂肪細胞、脂肪、自己由来の組織（例えば、身体からの敵対的な反応を最小化するための組織移植片を形成するきれいな脂肪細胞を生み出す崩壊された脂肪細胞）、ＰＬＬＡ、ヒドロキシアパタイトが含まれる。治療促進剤は、皮下組織への音波の負荷の前に、間に、あるいはその後に供給することができる。

【００８４】

一つの実施形態において、溶液注入部材２１４に対する電源は、溶液注入部材に含まれる。他の実施形態において、溶液注入部材の電源は溶液注入部材の外部に配置される。例えば、溶液注入部材の電源は制御装置２２８によって供給することができる。少なくとも一つの実施形態において、注入容量、深さ、タイミング、および注入と超音波の負荷との同期を制御するアルゴリズムは、溶液注入部材に含まれているメモリあるいはまたプロセッサに含めることができる。少なくとも他の実施形態においては、注入容量、深さ、タイミング、および注入と超音波の負荷との同期を制御するアルゴリズムは、溶液注入部材の外部に配置された、例えば制御装置に含めることができる。

【００８５】

一つの実施形態において、溶液注入部材２１４は少なくとも一つの皮下注射針６２を含む。皮下注射針は、溶液注入部材に接続された近位端、および治療のために標的領域１００に貫通するように構成された遠位端を有している。針の遠位端は、周知のように、肌に対するより外傷的でない貫入のために、斜めに切断（図示せず）することができる。一つの実施形態において、針は極微針を含むことができる。少なくとも一つの実施形態におい

て、針は角錐状（図示せず）に形付けることができる。さらに他の実施形態において、溶液注入部材は複数の皮下注射針を含む。皮下注射針は、溶液が針を通って組織に流入するように構成された中央管腔を具備した、管状のチャネルを有している。一つの実施形態において、溶液注入部材は、溶液注入部材の内部の位置から針が表皮１０２を介して治療する皮下組織に貫通する位置へと、皮下注射針を移動させるための作動要素（図示せず）を有している。一つの実施形態において、針は、少なくとも皮下脂肪１０６を貫通するように構成される。さらに他の実施形態において、針は、深部脂肪層１１０を貫通するように構成される。

【００８６】

注射針の直径は４０ゲージから７ゲージのサイズにわたる。一つの実施形態において、注射針は３０ゲージのサイズである。さらに他の実施形態において、注射針は２８ゲージのサイズである。さらなる実施形態において、注射針は２５ゲージのサイズである。追加の実施形態において、注射針は２２ゲージのサイズである。さらに他の実施形態において、注射針は２０ゲージのサイズである。さらに一つの実施形態において、注射針は１８ゲージのサイズである。針の全てを一つの長さとすることもできるし、あるいは異なる長さすることもでき。一つの実施形態において、針の全長は２．０ミリメートル～１０．０ｃｍである。一つの実施形態においては、針の全長は５ミリメートル未満である。他の実施形態において、針の全長は５．０ミリメートル～２．０ｃｍの範囲である。他の一つの実施形態において、針の全長は１．０ｃｍ～３ｃｍの範囲である。さらに他の実施形態において、針の全長は２．０ｃｍ～５ｃｍの範囲である。他の実施形態においては、針の全長は３．０ｃｍ～１０．０ｃｍの範囲である。

【００８７】

少なくとも一つの実施形態において、注射針６２は極微針を含む。一つの実施形態において、極微針の直径は２０ミクロン～５００ミクロンの範囲である。一つの実施形態において、極微針の全長は１００ミクロン～２０００ミクロンの範囲である。少なくとも一つの実施形態において、針は表皮１０２から深部脂肪層１１０に到達するのに十分な長さである。少なくとも一つの他の実施形態において、針は表皮から筋肉層２６に到達するのに十分な長さである。少なくとも一つの実施形態において、患者の快適性を増大させるために、局所的な麻酔クリームあるいはゲル、局所冷却法あるいは局所ブロックを用いて、更なる麻酔を治療領域に付加することができる。局所麻酔薬は、唯一必要な麻酔薬とすることもできるし、促進剤として用いられる任意のリドカインに代えることもできる。

【００８８】

一つの実施形態において、針６２は、治療する標的組織に応じて、皮膚表面から０．２ミリメートル～４０ミリメートルの距離にある皮下組織１０６に延びるのに十分な長さとすることができる。針は、針の遠位端２２６が少なくとも角質層を通って延びることができるように十分に長い。例えば、セルライトを治療するためには１．０ミリメートル～５．０ミリメートルの針入の深さが望しく、より深い皮下脂肪のためには３．０ミリメートル～４０ミリメートルの針入深さが望ましい。１つ若しくは複数の皮下注射針が、手動であるいは制御装置２２８によって自動的に、様々な深さに移動することができる。少なくとも一つの実施形態において、針は表皮１０２から深部脂肪層１１０に到達するのに十分な長さである。少なくとも一つの他の実施形態において、針は表皮１０２から筋肉層２６に到達するのに十分な長さである。

【００８９】

少なくとも一つの実施形態において、本発明の装置は、より深い組織層からより表面的な組織層へと、各段階の注入の間に組織に対してエネルギーを負荷しつつ、段階的な深さの注入を提供するようにに構成される。１つ若しくは複数の皮下注射針が、手動であるいは制御装置２２８によって自動的に様々な深さに移動することができ、更に後述するように組織は段階的な深さで治療される。

【００９０】

組立体２００は、注入部材２１４による溶液の注入の後に、様々な回数でエネルギー供

給システム３３を活性化できるように構成されている。少なくとも一つの実施形態において、治療する組織への溶液の注入に続いて、組織へのエネルギー負荷のタイミングに同期させるために、制御装置２２８を用いることができる。一つの実施形態において、注入部材は、少なくとも治療する組織への溶液の注入を開始させるためのスイッチを有するように構成される。少なくとも一つの実施形態において、注入部材は、注入を停止させあるいはまた患者から針６２を引き抜くための停止ボタンを有するように構成することができる。

【００９１】

本発明のさらに他の実施形態において、組立体２００は冷却モジュール（図示せず）を含む。患者の肌への注入は、一般的に不快感、腫大、出血、瘢痕化あるいは他の望まれない効果といった副作用を伴う。さらにまた、本発明によって治療される皮下組織の破壊は、多くの美容整形あるいは皮膚科的治療に一般的ないくつかの副作用に結びつく。冷却モジュールの使用は本発明による治療の副作用を減少させる。組織の冷却は、出血、腫大および不快感を減少させる。この冷却モジュールは、従来技術において公知の多くの冷却方式のいずれかを含むことができる。少なくとも一つの実施形態において、冷却モジュールの一部はハンドピース２４２に含めることができる。冷却モジュールの一つの利点は、本発明の治療に伴う不快感、腫大、瘢痕化および他の望まれない効果の治療あるいは予防を援助することにある。少なくとも一つの他の実施形態において、この冷却モジュールは別個のモジュールとして組立体に含めることができる。さらに他の実施形態において、促進溶液は、治療する組織への注入の前に冷却することができる。

【００９２】

ハンドピース２４２は、異なる皮下異常あるいは異なる重症度の皮下異常を治療するように構成された、異なるサイズに設けることができる。一つのハンドピースは、他のものよりも高い針６２の密度を有する。例えば、セルライトのより重症な領域は、針の密度がより高いパターンのハンドピースによって治療することができる。使い捨てのハンドピースを有する少なくとも一つの実施形態においては、そのハンドピースの他の患者への再利用を防止するために安全対策チップ（図示せず）をハンドピースに設けることができ、それによって例えば肝炎あるいはエイズといった疾患の拡散を防止することができる。安全対策チップは、偽造のハンドピースが流通して患者に用いられることを防止するために含めることができる。

【００９３】

安定した結果を生み出すためのさらに他の要因は、治療する部位の肌表面積に対する注入溶液の容量である。一つの実施形態において、注入容量は、治療する部位の肌表面領域について約０．１ｃｃ／平方ｃｍ～治療する部位の肌表面領域について約２．０ｃｃ／平方ｃｍの範囲である。他の実施形態において、注入容量は、治療する部位の肌表面領域について約０．２５ｃｃ／平方ｃｍ～治療する部位の肌表面領域について約１．５ｃｃ／平方ｃｍの範囲である。さらに他の実施形態において、注入容量は、治療する部位の肌表面領域について約０．５ｃｃ／平方ｃｍ～治療する部位の肌表面領域について約１．０ｃｃ／平方ｃｍの範囲である。しかしながら、上述した注入容量は例示のためだけのものであり、治療する個々の患者の耐痛限界および治療する位置の脂肪層の深さに応じて変更することができる。

【００９４】

安定した結果を生み出すためのさらに別の要因は、治療する組織への溶液の噴射率である。一つの実施形態において、溶液の噴射率は約０．０１ｃｃ／秒～約１．０ｃｃ／秒の範囲である。他の一実施形態において、溶液の噴射率は約０．０２ｃｃ／秒～約０．５ｃｃ／秒の範囲である。別の実施形態において、溶液の噴射率は約０．０５ｃｃ／秒～約０．２ｃｃ／秒の範囲である。しかしながら、前述した噴射率は例示のためだけのものであり、治療する個々の患者の耐痛限界および治療する位置の脂肪層の症状に応じて変更することができる。

【００９５】

本発明は、皮下組織を崩壊させる方法を含む。この方法は、治療する皮下組織１００に少なくとも一つの促進剤５４を配設することを含む。促進剤には溶液を含めることができる。この溶液は、少なくとも一つの皮下注射針６２を介して皮下脂肪１０６に注入することができる。それから、しばらくの間皮下組織に配設される促進剤を残して針を引き抜くことができる。エネルギー供給システム３３は治療する組織にエネルギーを供給することができ、促進剤に近接する皮下脂肪１０６あるいはまた線維性のセプタム１０８は崩壊する。

【００９６】

組織に伝達するエネルギー量および組織における生物学的な効果の一つの要因は、破壊的なエネルギーを組織に印加する前に注入された溶液が組織内に存在する時間の長さである。一つの実施形態において、注入された溶液は、破壊的なエネルギーを印加する前の約１０分～約３０分で組織内に浸透する。さらに他の実施例において、注入された溶液は、破壊的なエネルギーを印加する前の約１分～約１０分で組織内に浸透する。さらに他の実施例において、注入された溶液は、破壊的なエネルギーを印加する前の約１秒～約１分で組織内に浸透する。少なくとも一つの他の実施形態において、注入された溶液は、破壊的なエネルギーを印加する前の約５０ミリ秒～約１０００ミリ秒で組織内に浸透する。少なくとも一つの他の実施形態において，破壊的なエネルギーは溶液の注入とほとんど同時に治療する組織に印加される。

【００９７】

破壊的エネルギー照射の持続期間もまた、組織に対する破壊的エネルギーの生物学的な効果を決定し得る。一つの実施形態において、破壊的エネルギーは約１０秒の持続期間で治療する組織１００に印加される。他の実施形態において、破壊的エネルギーは約３０秒の持続期間で治療する組織１００に印加される。さらに他の実施形態において、破壊的エネルギーは約１分の持続期間で治療する組織１００に印加される。さらに他の実施形態において、破壊的エネルギーは約２分の持続期間で治療する組織１００に印加される。少なくとも一つの他の実施形態において、破壊的エネルギーは約５分の持続期間で治療する組織１００に印加される。さらに他の実施形態において、破壊的エネルギーは約５分～２０分の間の持続期間で治療する組織１００に印加される。なお他のひとつ実施形態において、破壊的エネルギーは約２０分～１時間の持続期間で治療する組織１００に印加される。

【００９８】

腫脹性の溶液は、例えば脂肪吸引手技の間に局所麻酔の適用を提供する、特に構成された溶液である。腫脹性の溶液は周知の技術である。腫脹性の溶液は様々な医薬用溶液を利用する。一つの実施形態において，腫脹性の溶液は、２％のリドカインを含有した１０００ｍｌの通常生理食塩溶液、３０ｍｌ（６００ミリグラム）のエピネフリン、および１モル（１２．５ｍｌあるいは１２．５ミリグラム）の重炭酸ナトリウムを含む。少なくとも一つの他の実施形態において、腫脹性の溶液は、１０００ｍｌの通常生理食塩溶液、５０ｍｌの１％リドカイン、および１ｃｃの１：１０００エピネフリンを含む溶液である。これらの添加物は、商業的に入手可能である。一つの実施形態においては，この腫脹性の溶液は撹拌機２０８に加えることができる。他の実施形態においては、予備混合されたあるいは商業的に入手可能な腫脹性の溶液を用いることができる。腫脹性の溶液は、治療部位の出血を減少させることができるとともに、手技の間および後における痛みを減少させる局所麻酔効果を提供することができる。少なくとも一つの実施形態において、促進剤はまた腫脹性の溶液を含むことができる。少なくとも一つの実施形態において、注入される促進溶液５４は低張溶液である。

【００９９】

少なくとも一つの他の実施形態において、様々な深さの皮下組織の治療は段階的に実行される。それぞれの注入に続いて，治療する組織への破壊的なエネルギーを負荷することができる。例えば、第１段階においては、深い位置への溶液の注入が実行されると、より深い層へ破壊的なエネルギーが印加される。第２段階においては、より表面的な位置への注入が実行されると、より表面的な層への破壊的なエネルギーが印加される。徐々に表面

的となる深さにおける複数段階の溶液の注入は、破壊的なエネルギー、例えば溶液をそれぞれ注入した後における破壊的なエネルギーの印加と共に実行することができる。一つの実施形態において、各段階の注入は，その前段階の注入よりも約０．５～２．０ｃｍ浅い深さで実行される。一つの実施形態においては、各段階の注入は、その前段階の注入よりも約０．５ミリメートル浅い深さで実行される。他の実施例において，各段階の注入は、その前段階の注入よりも約１ミリメートル浅い深さで実行される。さらに追加的な一実施形態において，各段階の注入は、その前段階の注入よりも約２ミリメートル浅い深さで実行される。他の実施例において、各段階の注入は、その前段階の注入よりも約５ミリメートル浅い深さで実行される。さらに他の実施例において、各段階の注入は、その前段階の注入よりも約１．０センチメートル浅い深さで実行される。の他の実施形態、さらに一つの実施形態において，各段階の注入は、その前段階の注入よりも約１．５センチメートル浅い深さで実行される。さらに一つの実施形態において，各段階の注入は、その前段階の注入よりも約２．０センチメートル浅い深さで実行される。、さらに他の実施形態において、皮下組織の浸透は、約３０ミリメートル、約２５ミリメートル、および約２０ミリメートルの深さの段階において実行される。一つの他の実施形態において、皮下組織の浸透は、約１０ミリメートル，約５ミリメートル、および約２ミリメートルの深さの段階において実行される。少なくとも一つの実施形態においては、各段階の注入の間に破壊的なエネルギーを印加するのではなく、全ての深さにおける注入の後に一連の破壊的なエネルギーが組織に印加される。

【０１００】

一つの実施形態において、治療する組織は皮層１０４と深部脂肪層１１０との間において注入を受ける。他の実施例において、治療する組織は、表面的な脂肪層１０６と筋肉層２６との間において注入を受ける。さらに他の実施形態において、治療する組織は、皮層１０４と筋肉層２６との間において注入を受ける。一つの実施形態において、治療する組織は、約２ミリメートル～４．０センチメートルの深さにおいて注入を受ける。一つの実施形態においては、治療される組織は、約０．５ミリメートルの深さにおいて注入を受ける。少なくとも一つの実施形態において，治療される組織は、約１．０ミリメートルの深さにおいて注入を受ける。さらに追加的な一実施形態において、治療される組織は、約１．５ミリメートルの深さにおいて注入を受ける。一つの実施形態においては、組織は約２ミリメートルの深さにおいて注入を受けて治療される。他の一実施形態において、組織は約５ミリメートルの深さにおいて注入を受けて治療される。さらに他の実施例においては、組織は約１．０センチメートルの深さにおいて注入を受けて治療される。さらに一つの実施形態において、組織は約１．５センチメートルの深さにおいて注入を受けて治療される。さらに一つの実施形態において、組織は約２．０センチメートルの深さにおいて注入を受けて治療される。さらに一つの実施形態において，組織は約２．５センチメートルの深さにおいて注入を受けて治療される。さらに一つの実施形態において、組織は約３．０センチメートルの深さにおいて注入を受けて治療される。さらに一つの実施形態において，組織は約３．５センチメートルの深さにおいて注入を受けて治療される。さらに一つの実施形態において、組織は約４．０センチメートルの深さにおいて注入を受けて治療される。一つの実施形態においては、単一の深さの注入あるいは組織の浸透が実行される。少なくとも一つの他の実施形態においては，複数の深さにおける注入あるいは浸透が実行される。

【０１０１】

溶液の注入と破壊的なエネルギーの負荷との間の時間の経過は、約０秒～１時間の範囲とすることができる。溶液５４の注入に続く破壊的なエネルギーの印加のタイミングを同期させるために、自動制御装置２２８を用いることができる。一つの実施形態においては、破壊的なエネルギーの印加は溶液の注入とほぼ同時とすることができる。一つの実施形態においては、破壊的なエネルギーを印加する約５秒未満前に注入を実行することができる。他の実施例においては、破壊的なエネルギーを印加する約５秒～約２０秒前に注入が実行される。さらに一つの実施形態においては、破壊的なエネルギーを印加する約２０秒

～約６０秒前に注入が実行される。さらに他の実施形態においては、破壊的なエネルギーを印加する約１分～５分前に注入が実行される。さらに一つの実施形態においては、破壊的なエネルギーを印加する約５分～１５分前に注入が実行される。もう一つの実施形態においては、破壊的なエネルギーを印加する約１５分～３０分前に注入が実行される。さらに他の実施例においては、破壊的なエネルギーを印加する約３０分～６０分前に注入が実行される。

【０１０２】

安定した結果を生じさせるさらに他の要因は、破壊的なエネルギーを印加する前に溶液をエネルギーによって組織内に分散させる期間である。一つの実施形態において、治療する組織に溶液を分散させるために超音波を用いることができる。一つの実施形態において、破壊的なエネルギーを印加する前に、エネルギーによって溶液を組織内に分散させる期間は約１秒～５秒である。他の実施形態において、破壊的なエネルギーを印加する前に、エネルギーによって溶液を組織内に分散させる期間は約５秒～３０秒である。さらに一つの実施形態において、破壊的なエネルギーを印加する前に、エネルギーによって溶液を組織内に分散させる期間は約３０秒～６０秒である。さらに他の実施形態において、破壊的なエネルギーを印加する前に、エネルギーによって溶液を組織内に分散させる期間は約１分～５分である。

【０１０３】

一つの実施形態においては、治療する組織の破壊に続いて、破壊された組織を患者の内部に残し、例えば患者の身体によって吸収させることができる。他の実施例においては、破壊した組織は、例えば脂肪吸引によって患者の身体から取り除くことができる。

【０１０４】

一つの実施形態において、電極は、肌の上に配置できるとともに、望まれない表面の火傷を回避するために最小限のエッジ効果を有するように構成される。さらに他の実施形態おいて、皮下の針電極は、少なくとも一つの針の遠位端に隣接した特定の位置にエネルギー電界強度を集中させるように構成することができる。例えば、ピラミッド状あるいは斜めに切断した遠位側を有する針は、その遠位端に隣接するきわめて高いエッジ効果を有する傾向がある。さらに他の実施形態においては、針の配列の配置、例えば針を並べて配置すると、複数の高い電界強度の組織治療箇所に結びつき、それによって治療する組織のより大きな領域の全体に局所性の組織剥離を生じさせる。身体が治療された組織を回復させてリモデリングすると、これらの組織の治療部位は再吸収され、破壊させた脂肪細胞は取り除かれる。このことは、局所性の火傷が健康な組織の島と共に治療された組織に作り出されて治癒および移動を容易にする、高い強度で焦点合わせされた超音波アレイを含む治療の後に生じるリモデリングに類似している。少なくとも一つの他の実施形態においては、鈍い針電極を含めることができ、それによって治療した組織におけるより大きな治療破壊効果領域に結びつく。

【０１０５】

本発明は、組織を治療する他の方法あるいは装置と組み合わせることができる。例えば、本発明は、肌を締める手技、例えばRayward（カリフォルニア州）のThermage Corporationから入手可能なThermage（商標）、Brisbane（カリフォルニア州）のCutera, Inc.から入手可能なCutera Titan(商標)、あるいは、Santa Clara（カリフォルニア州）のLumenis, Inc.から利用可能なAluma（商標）の使用を含むことができる。

【０１０６】

本発明は、その精神および必須の特徴から逸脱することなしに他の形態で具体化することができる。したがって、説明した実施形態はあらゆる観点において例示的なものであって限定的なものではないことが考慮されるべきである。ある好ましい実施形態について本発明を説明してきたが、当業者にとって明らかな他の実施形態もまた本発明の範囲内である。したがって、本発明の範囲は、添付の請求の範囲を参照することのみによって定められることが意図される。

【図面の簡単な説明】

【０１０７】
【図１Ａ】皮膚および皮下組織の正常領域の様々な層を示す図。
【図１Ｂ】皮膚および皮下組織の病的な領域の様々な層を示す図。
【図２】非侵襲的にエネルギーを負荷する本発明の装置の一実施形態を示す図。
【図３Ａ】本発明のクランプの実施形態を模式的に示す図。
【図３Ｂ】図３Ａのクランプの実施形態における電流分布のモデルを模式的に示す図。
【図４】円柱状の電極を用いた図３Ａのクランプの実施形態を模式的に示す図。
【図５Ａ】本発明のローラボールの実施形態を模式的に示す図。
【図５Ｂ】図５Ａのローラボールの実施形態における電流分布を模式的に示す図。
【図６】外側に設けられたエネルギー負荷装置を有した治療促進剤と共に用いる本発明の注入システムの実施形態を示す図。
【図７Ａ】皮膚表面に当てられる極微針を具備したパッドを有するシステムを備えた本発明の実施形態を示す図。
【図７Ｂ】吸引が肌の表面をパッドに向けて上方に引っ張り上げたことにより極微針が肌表面を貫通している状態を示す図７Ａの実施形態を示す図。
【図８Ａ】目標とする組織に当てられた状態を示す図７Ａの実施形態の断面図。
【図８Ｂ】パッド上に配列として配設された極微針を有した本発明の装置の一実施形態を示す図。
【図８Ｃ】図８Ｂの装置の要部拡大図。
【図９】本発明の侵入型電極の配列の実施形態を示す図。
【図１０】本発明の侵入型電極の配列の実施形態を示す図。
【図１１】本発明の侵入型電極の配列の実施形態を示す図。
【図１２】皮膚表面に当てられる電極と共に用いられる、本発明の侵入型電極の配列の実施形態を示す図。
【図１３】皮膚表面に当てられる電極と共に用いられる、本発明の侵入型電極の配列の実施形態を示す図。
【図１４】皮膚表面に当てられる電極および提案する治療のレイアウトと共に用いられる、本発明の侵入型電極の配列の実施形態を示す図。
【図１４Ａ】電極治療のレイアウトの一例を示す図。
【図１５】個別に配置されるエネルギー伝達要素に使用するテンプレートを示す図。
【図１６】複数のエネルギー伝達要素に使用する治療アルゴリズムの一例を示す図。
【図１７Ａ】治療改善薬剤を注入するエネルギー負荷システムおよび装置を示す図。
【図１７Ｂ】治療する組織にハンドピースが挿入される図１７Ａのシステムおよび装置を示す図。
【図１８】皮下組織を治療するための組立体を示す図。

【図１Ａ】

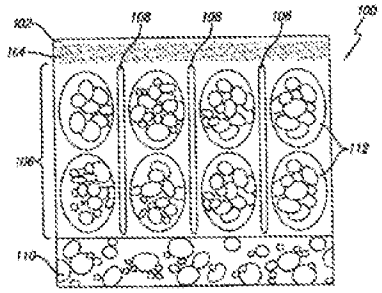

FIG. 1A

【図１Ｂ】

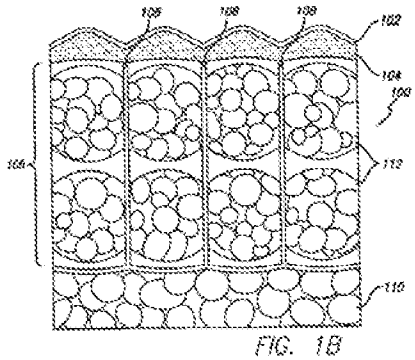

FIG. 1B

【図２】

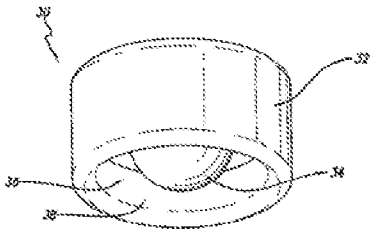

FIG. 2

【図３Ａ】

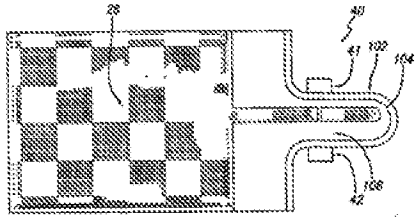

FIG. 3A

【図３Ｂ】

FIG. 3B

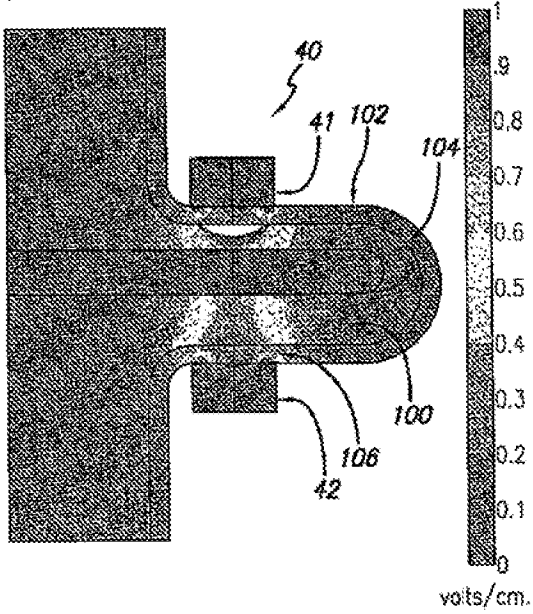


【図４】

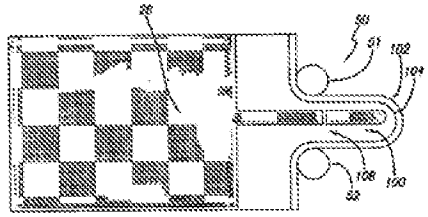

FIG. 4

【図５Ａ】

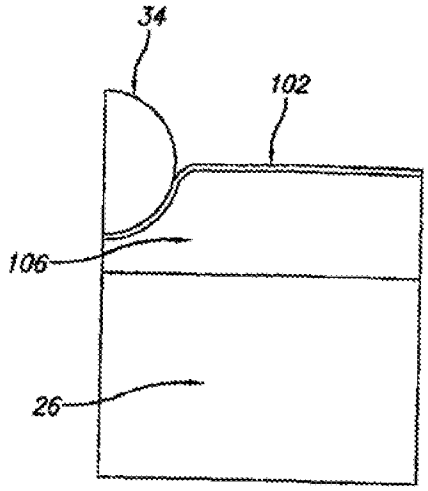


FIG. 5A

【図５Ｂ】

FIG. 5B

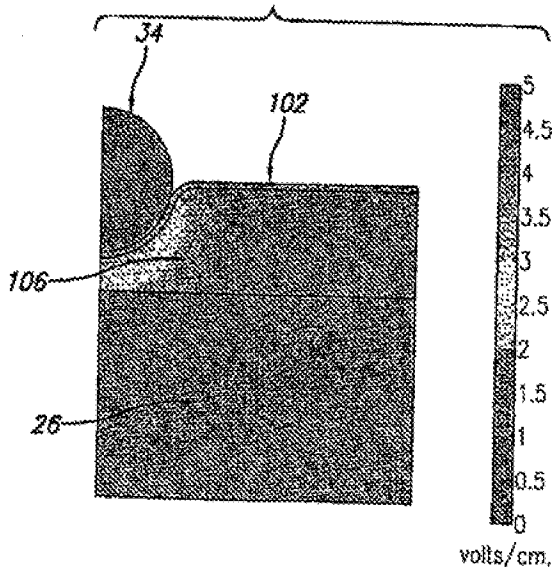


【図６】

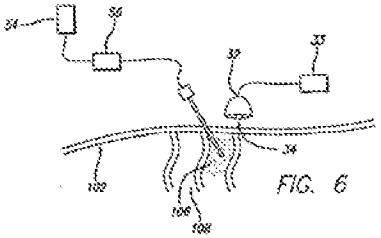

FIG. 6

【図７Ａ】

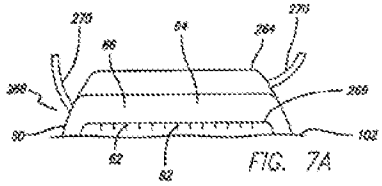

FIG. 7A

【図７Ｂ】

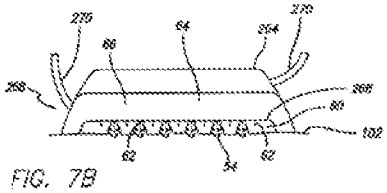

FIG. 7B

【図８Ａ】

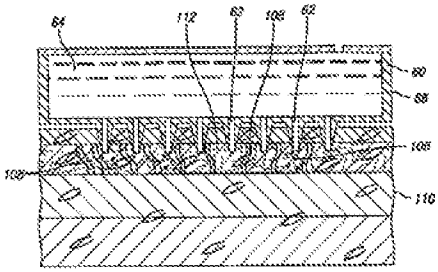

FIG. 8A

【図８Ｂ】

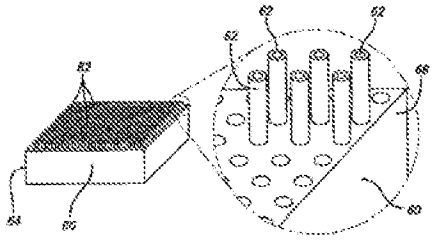

FIG. 8B FIG. 8C

【図８Ｃ】

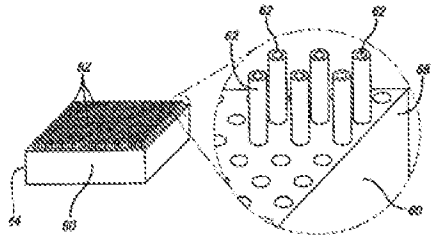

FIG. 8B FIG. 8C

【図９】

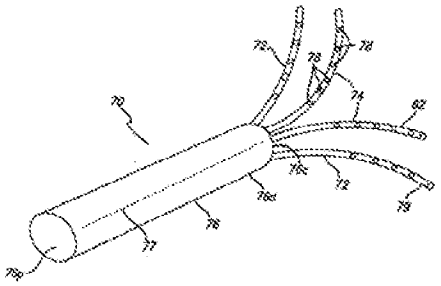

FIG. 9

【図１０】

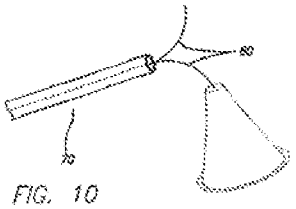

FIG. 10

【図１１】

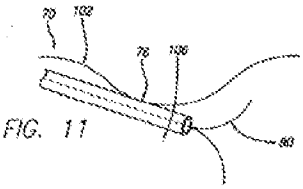

FIG. 11

【図１２】

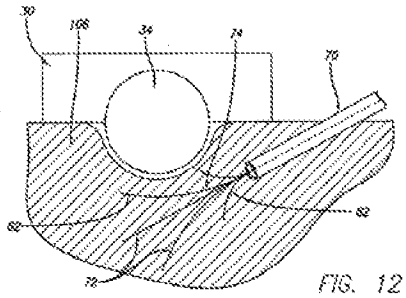

FIG. 12

【図１３】

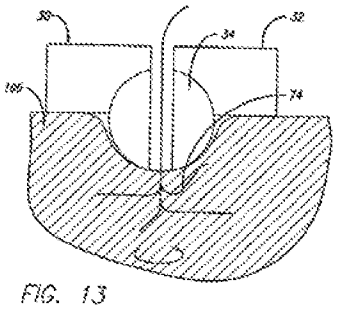

FIG. 13

【図１４】

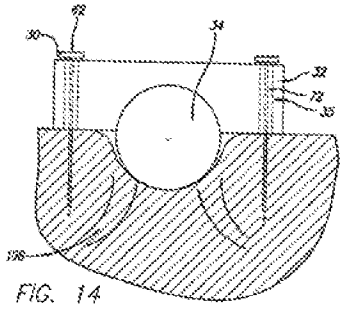

FIG. 14

【図１４Ａ】

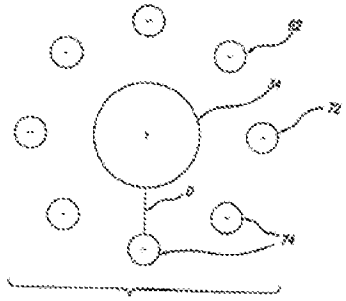

FIG. 14A

【図１５】

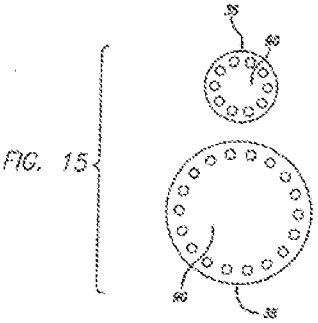

FIG. 15

【図１６】

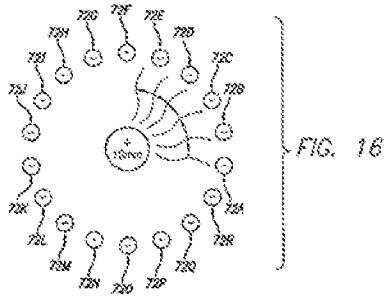

FIG. 16

【図１７Ａ】

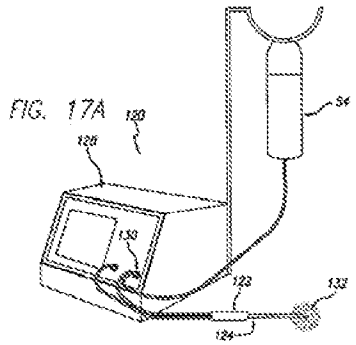

FIG. 17A

【図１７Ｂ】

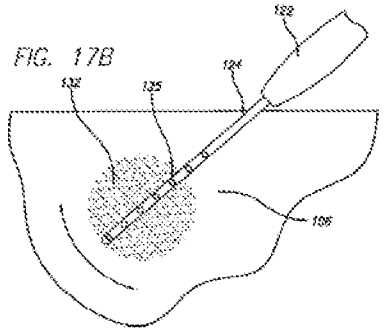

FIG. 17B

【図１８】

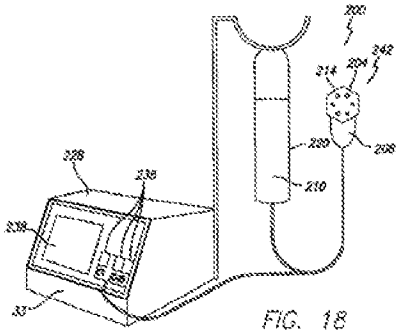

FIG. 18

【手続補正書】
【提出日】平成20年5月8日(2008.5.8)
【手続補正１】
【補正対象書類名】特許請求の範囲
【補正対象項目名】全文
【補正方法】変更
【補正の内容】
【特許請求の範囲】
【請求項１】
音波を発生させるための音波発生装置と、
前記音波発生装置に作動的に接続されるとともに患者の皮下組織に音波を印加するように構成された音波トランスデューサと、
ガス供給源と、
溶液供給源と、
前記溶液供給源および前記ガス供給源に作動的に接続された溶液注入部材と、
を備え、
前記溶液注入部材は、患者の皮下組織にガスおよび溶液を経皮的に注入するように構成され、
前記皮下組織に対する音波の印加は、前記皮下組織に注入された溶液内における皮下の空洞化による生物学効果を生み出し、
前記音波発生装置は、０．１Ｍｐａ～１０．０ＭＰａの範囲のピーク負圧を有するとともに約０．２５ＭＨｚ～約２０ＭＨｚの範囲の振動数を有した音波を生じさせる皮下組織を治療するための組立体。
【請求項２】
前記ガス供給源が室内空気であることを特徴とする請求項１に記載の組立体。

【請求項３】
内部に前記ガス供給源を保持するように構成されたガスハウジングをさらに備えることを特徴とする請求項１に記載の組立体。
【請求項４】
内部に前記溶液供給源を保持するように構成された溶液ハウジングをさらに備えることを特徴とする請求項１に記載の組立体。
【請求項５】
前記溶液供給源および前記ガス供給源に作動的に接続された溶液攪拌機をさらに備え，
前記溶液攪拌機は溶液の微小な泡を作り出すように構成されていることを特徴とする請求項１に記載の組立体。
【請求項６】
前記溶液注入部材は、ハウジングおよび複数の中空の注入部材を含んでいることを特徴とする請求項１に記載の組立体。
【請求項７】
前記中空注入部材の少なくとも１つの遠位端は、溶液注入部材ハウジングの内側にある第１の状態と，前記遠位端が前記溶液注入部材ハウジングの外側に延びる第２の状態と，の間で動くことができることを特徴とする請求項６に記載の組立体。
【請求項８】
前記溶液注入部材は、扇形に広がる針の配列を有していることを特徴とする請求項１に記載の組立体。
【請求項９】
前記音波トランスデューサが平面トランスデューサであることを特徴とする請求項１に記載の組立体。
【請求項１０】
前記平面トランスデューサの焦点ゾーンは，表皮の下方において約１ミリメートル～約１５ミリメートルの組織深さで延びる近いゾーンから、表皮の下方において約１５ミリメートル～約３０ミリメートルの組織深さで延びる離れたゾーンへと延びていることを特徴とする請求項９に記載の組立体。
【請求項１１】
前記トランスデューサに作動的に接続されて所望の組織深さに平面トランスデューサの焦点ゾーンを配置する，音響的に連結された音響スタンドオフをさらに備えることを特徴とする請求項９に記載の組立体。
【請求項１２】
前記トランスデューサおよび前記注入部材の一つに作動的に接続されて、この組立体による美容整形あるいは皮膚科的治療に伴う不快感、腫大、瘢痕化あるいは他の望まれない効果を減少させる組織冷却モジュールをさらに備えることを特徴とする請求項１に記載の組立体。
【請求項１３】
前記溶液注入部材および前記音波発生装置に作動的に接続されるとともに溶液の注入と音波の印加とを協調させるように構成された制御モジュールをさらに備えることを特徴とする請求項１に記載の組立体。
【請求項１４】
前記制御モジュールは、音波の負荷と協調して様々な組織深さにおいて注入の段階的な順序を提供するように構成されていることを特徴とする請求項１３に記載の組立体。
【請求項１５】
前記溶液と前記ガスとを混ぜ合わせるように構成された溶液攪拌機と、
前記溶液の攪拌、前記溶液の皮下組織への注入、および前記皮下組織に対する音波の負荷を協調させるように構成された制御モジュールとをさらに備えることを特徴とする請求項１に記載の組立体。
【請求項１６】

前記溶液撹拌機は、微小な泡を含んでいる溶液を生じさせるために前記溶液と前記ガスとを撹拌することを特徴とする請求項１５に記載の組立体。

【請求項１７】

約０．２５ＭＨｚ～約２０ＭＨｚの範囲の振動数および０．１Ｍｐａ～１０．０ＭＰａの範囲のピーク負圧を有した音波を生じさせるための音波発生装置と、

前記音波発生装置に作動的に連結されるとともに患者の皮下組織に音波を印加するように構成された音波トランスデューサと、

ガス供給源と、

前記ガス供給源に作動的に接続されるとともに前記ガスを前記溶液に混ぜ合わせて気体を含む溶液を生じさせるように構成された溶液撹拌機と、

前記溶液撹拌機に作動的に接続されるとともに気体を含んでいる溶液を患者の皮下組織に経皮的に注入するように構成された溶液注入部材と、

を備え、

前記音波が前記気体を含んでいる溶液と相互に作用する、皮下組織を治療するための組立体。

【請求項１８】

約０．２５ＭＨｚ～約２０ＭＨｚの範囲の振動数および０．１Ｍｐａ～１０．０ＭＰａの範囲のピーク負圧を有した超音波を生じさせるための超音波発生装置と、

前記超音波発生装置に作動的に接続されるとともに患者の皮下組織に超音波を印加するように構成された超音波トランスデューサと、

ガス供給源と、

溶液供給源と、

前記ガス供給源および前記溶液供給源に作動的に接続されるとともに前記ガスを前記溶液と混ぜ合わせて微小泡溶液を形成するように構成された溶液撹拌機と、

前記溶液撹拌機に作動的に接続されるとともに少なくとも一つの中空注入部材を有し、前記少なくとも一つの中空注入部材の遠位端は溶液注入部材ハウジングの内側にある第１の状態と前記注入部材の遠位端が前記溶液注入部材ハウジングの外側に延びる第２の状態との間で動くことができるようになっている溶液注入部材と、

微小な泡溶液の発生、治療する組織への微小な泡溶液の注入、治療する組織内における微小な泡溶液の分散、および治療する組織内の微小な泡溶液への超音波の照射を統合して協調させる制御モジュールと、

を備えることを特徴とする皮下組織を治療するための組立体。

【国際調査報告】

## INTERNATIONAL SEARCH REPORT

International application No.
PCT/US 05/34414

A. CLASSIFICATION OF SUBJECT MATTER
IPC(8)- A61N 1/18 (2007.01)
USPC- 606/131
According to International Patent Classification (IPC) or to both national classification and IPC

B. FIELDS SEARCHED

Minimum documentation searched (classification system followed by classification symbols)
USPC: 606/131

Documentation searched other than minimum documentation to the extent that such documents are included in the fields searched
USPC: 606/9, 32, 41, 191, 167; 604/22, 201, 288 (text search - see terms below)

Electronic data base consulted during the international search (name of data base and, where practicable, search terms used)
Electronic data base: PubWEST(USPT,PGPB,EPAB,JPAB); WIPO search
Search Terms Used: electrode; subcutaneous; needle etc.

C. DOCUMENTS CONSIDERED TO BE RELEVANT

| Category* | Citation of document, with indication, where appropriate, of the relevant passages | Relevant to claim No. |
|---|---|---|
| X<br>---<br>Y | WO 2003/047689 A1 (JOSHI, A.V.) 12 June 2003 (12.06.2003) Entire document | 1-9, 23<br>---<br>10, 15-17 |
| Y | US 2002/0120261 A1 (MORRIS et al) 29 August 2002 (29.08.2002) Entire document | 10, 15-17 |
| A | US 2004/0122483 A1 (Nathan et al.) 24 June 2004 (24.06.2004) | 1-26 |

☐ Further documents are listed in the continuation of Box C. ☐

* Special categories of cited documents:
"A" document defining the general state of the art which is not considered to be of particular relevance
"E" earlier application or patent but published on or after the international filing date
"L" document which may throw doubts on priority claim(s) or which is cited to establish the publication date of another citation or other special reason (as specified)
"O" document referring to an oral disclosure, use, exhibition or other means
"P" document published prior to the international filing date but later than the priority date claimed
"T" later document published after the international filing date or priority date and not in conflict with the application but cited to understand the principle or theory underlying the invention
"X" document of particular relevance; the claimed invention cannot be considered novel or cannot be considered to involve an inventive step when the document is taken alone
"Y" document of particular relevance; the claimed invention cannot be considered to involve an inventive step when the document is combined with one or more other such documents, such combination being obvious to a person skilled in the art
"&" document member of the same patent family

| Date of the actual completion of the international search | Date of mailing of the international search report |
|---|---|
| 16 February 2007 (16.02.2007) | 24 JUL 2007 |
| Name and mailing address of the ISA/US<br>Mail Stop PCT, Attn: ISA/US, Commissioner for Patents<br>P.O. Box 1450, Alexandria, Virginia 22313-1450<br>Facsimile No. 571-273-3201 | Authorized officer:<br>Lee W. Young<br>PCT Helpdesk: 571-272-4300<br>PCT OSP: 571-272-7774 |

Form PCT/ISA/210 (second sheet) (April 2005)

フロントページの続き

(81)指定国 AP(BW,GH,GM,KE,LS,MW,MZ,NA,SD,SL,SZ,TZ,UG,ZM,ZW),EA(AM,AZ,BY,KG,KZ,MD,RU,TJ,TM),EP(AT,BE,BG,CH,CY,CZ,DE,DK,EE,ES,FI,FR,GB,GR,HU,IE,IS,IT,LT,LU,LV,MC,NL,PL,PT,RO,SE,SI,SK,TR),OA(BF,BJ,CF,CG,CI,CM,GA,GN,GQ,GW,ML,MR,NE,SN,TD,TG),AE,AG,AL,AM,AT,AU,AZ,BA,BB,BG,BR,BW,BY,BZ,CA,CH,CN,CO,CR,CU,CZ,DE,DK,DM,DZ,EC,EE,EG,ES,FI,GB,GD,GE,GH,GM,HN,HR,HU,ID,IL,IN,IS,JP,KE,KG,KM,KN,KP,KR,KZ,LA,LC,LK,LR,LS,LT,LU,LV,LY,MA,MD,MG,MK,MN,MW,MX,MY,MZ,NA,NG,NI,NO,NZ,OM,PG,PH,PL,PT,RO,RS,RU,SC,SD,SE,SG,SK,SL,SM,SV,SY,TJ,TM,TN,TR,TT,TZ,UA,UG,US,UZ,VC,VN,ZA,ZM,ZW

(74)代理人 100106655
弁理士 森 秀行
(72)発明者 マーク、イー. ディーム
アメリカ合衆国カリフォルニア州、マウンテン. ビュー、シエラ、アベニュ、６８５
(72)発明者 ハンソン、エス. ギフォード、ザ. サード
アメリカ合衆国カリフォルニア州、ウッドサイド、ウッドサイド、ロード、３１８０

Ｆターム(参考) 4C053 DD02 DD08
4C160 JJ33

# INTERNATIONAL SEARCH REPORT

International application No.
**PCT/KR2012/001335**

A. CLASSIFICATION OF SUBJECT MATTER

***A61N 1/30(2006.01)i, A61H 23/02(2006.01)i, A61M 37/00(2006.01)i, A61N 5/06(2006.01)i***

According to International Patent Classification (IPC) or to both national classification and IPC

B. FIELDS SEARCHED

Minimum documentation searched (classification system followed by classification symbols)

A61N 1/30; A61B 18/00; A61H 15/00; A61B 18/20; A61H 39/08; A61N 1/00; A61N 1/06

Documentation searched other than minimum documentation to the extent that such documents are included in the fields searched
Korean Utility models and applications for Utility models: IPC as above
Japanese Utility models and applications for Utility models: IPC as above

Electronic data base consulted during the international search (name of data base and, where practicable, search terms used)

eKOMPASS (KIPO internal) & Keywords: skin, beauty appliance, protrusion, needle, motor, distance, signal, electricity, vibration.

C. DOCUMENTS CONSIDERED TO BE RELEVANT

| Category* | Citation of document, with indication, where appropriate, of the relevant passages | Relevant to claim No. |
|---|---|---|
| Y | KR 10-2011-0002210 A (YANG, WON DONG) 07 January 2011<br>See paragraphs [0024], [0055], [0057], [0062], [0071], [0073]-[0075], [0078], [0095], [0099]-[0100], [0103], [0107] and [0211], claims 1-3, 11 and 14 and figure 4. | 1-20 |
| Y | US 2008-0082090 A1 (MANSTEIN, DIETER) 03 April 2008<br>See paragraphs [0002] and [0036], claims 1, 3-5, 16, 19 and 22-24 and figures 3-5. | 1-20 |
| A | KR 10-2010-0018288 A (NA, JONG JU) 17 February 2010<br>See paragraphs [0030]-[0037] and [0043], claims 3-4 and figures 4-6. | 1-20 |
| A | JP 2009-506873 A (THE FOUNDRY, INC.) 19 February 2009<br>See paragraphs [0053], [0085] and [0088], claims 1-4 and 14-17 and figures 8A-8C. | 1-20 |

☐ Further documents are listed in the continuation of Box C.  ☒ See patent family annex.

* Special categories of cited documents:
"A" document defining the general state of the art which is not considered to be of particular relevance
"E" earlier application or patent but published on or after the international filing date
"L" document which may throw doubts on priority claim(s) or which is cited to establish the publication date of another citation or other special reason (as specified)
"O" document referring to an oral disclosure, use, exhibition or other means
"P" document published prior to the international filing date but later than the priority date claimed
"T" later document published after the international filing date or priority date and not in conflict with the application but cited to understand the principle or theory underlying the invention
"X" document of particular relevance; the claimed invention cannot be considered novel or cannot be considered to involve an inventive step when the document is taken alone
"Y" document of particular relevance; the claimed invention cannot be considered to involve an inventive step when the document is combined with one or more other such documents, such combination being obvious to a person skilled in the art
"&" document member of the same patent family

| Date of the actual completion of the international search | Date of mailing of the international search report |
|---|---|
| 28 SEPTEMBER 2012 (28.09.2012) | **28 SEPTEMBER 2012 (28.09.2012)** |
| Name and mailing address of the ISA/KR<br>Korean Intellectual Property Office<br>Government Complex-Daejeon, 139 Seonsa-ro, Daejeon 302-701, Republic of Korea<br>Facsimile No. 82-42-472-7140 | Authorized officer<br><br>Telephone No. |

Form PCT/ISA/210 (second sheet) (July 2009)

| Patent document cited in search report | Publication date | Patent family member | Publication date |
|---|---|---|---|
| KR 10-2011-0002210 A | 07.01.2011 | NONE | |
| US 2008-0082090 A1 | 03.04.2008 | AU 2005-231443 A1 | 20.10.2005 |
| | | AU 2005-231470 A1 | 20.10.2005 |
| | | AU 2005-231470 B2 | 06.10.2011 |
| | | CA 2579145 A1 | 20.10.2005 |
| | | CA 2579146 A1 | 20.10.2005 |
| | | EP 1740117 A2 | 10.01.2007 |
| | | EP 1742588 A1 | 17.01.2007 |
| | | EP 2301471 A1 | 30.03.2011 |
| | | JP 2007-531578 A | 08.11.2007 |
| | | JP 2007-537781 A | 27.12.2007 |
| | | JP 4971133 B2 | 11.07.2012 |
| | | US 2005-0222565 A1 | 06.10.2005 |
| | | US 2007-0264288 A1 | 15.11.2007 |
| | | US 2011-0046615 A1 | 24.02.2011 |
| | | US 7824394 B2 | 02.11.2010 |
| | | US 8268332 B2 | 18.09.2012 |
| | | WO 2005-096979 A1 | 20.10.2005 |
| | | WO 2005-096981 A2 | 20.10.2005 |
| | | WO 2005-096981 A3 | 20.10.2005 |
| | | WO 2005-107848 A2 | 17.11.2005 |
| KR 10-2010-0018288 A | 17.02.2010 | NONE | |
| JP 2009-506873 A | 19.02.2009 | AU 2006-287633 A1 | 15.03.2007 |
| | | AU 2006-287676 A1 | 15.03.2007 |
| | | AU 2006-270794 A1 | 08.01.2009 |
| | | CA 2621354 A1 | 15.03.2007 |
| | | CA 2621535 A1 | 15.03.2007 |
| | | CA 2702420 A1 | 08.01.2009 |
| | | CA 2769813 A1 | 10.02.2011 |
| | | EP 1928540 A2 | 11.06.2008 |
| | | EP 1928540 A4 | 10.03.2010 |
| | | EP 1940300 A2 | 09.07.2008 |
| | | EP 2173870 A1 | 14.04.2010 |
| | | EP 2209424 A1 | 28.07.2010 |
| | | JP 2009-506870 A | 19.02.2009 |
| | | JP 2010-532219 A | 07.10.2010 |
| | | US 2007-0055179 A1 | 08.03.2007 |
| | | US 2007-0055180 A1 | 08.03.2007 |
| | | US 2007-0055181 A1 | 08.03.2007 |
| | | US 2007-0060989 A1 | 15.03.2007 |
| | | US 2008-0014627 A1 | 17.01.2008 |
| | | US 2008-0195036 A1 | 14.08.2008 |
| | | US 2008-0197517 A1 | 21.08.2008 |
| | | US 2008-0200863 A1 | 21.08.2008 |
| | | US 2008-0200864 A1 | 21.08.2008 |
| | | US 2008-0248554 A1 | 09.10.2008 |

| Patent document cited in search report | Publication date | Patent family member | Publication date |
|---|---|---|---|
| | | US 2009-0093737 A1 | 09.04.2009 |
| | | US 2009-0275879 A1 | 05.11.2009 |
| | | US 2009-0275899 A1 | 05.11.2009 |
| | | US 2009-0326439 A1 | 31.12.2009 |
| | | US 2010-0010420 A1 | 14.01.2010 |
| | | US 2010-0228182 A1 | 09.09.2010 |
| | | US 2010-0228207 A1 | 09.09.2010 |
| | | US 2011-0028898 A1 | 03.02.2011 |
| | | US 7588547 B2 | 15.09.2009 |
| | | US 7601128 B2 | 13.10.2009 |
| | | US 7967763 B2 | 28.06.2011 |
| | | WO 2007-030367 A2 | 15.03.2007 |
| | | WO 2007-030367 A3 | 15.03.2007 |
| | | WO 2007-030415 A2 | 15.03.2007 |
| | | WO 2007-030415 A3 | 20.09.2007 |
| | | WO 2009-005980 A2 | 08.01.2009 |
| | | WO 2009-005982 A1 | 08.01.2009 |
| | | WO 2009-005995 A1 | 08.01.2009 |
| | | WO 2009-006001 A1 | 08.01.2009 |
| | | WO 2009-006006 A1 | 08.01.2009 |
| | | WO 2009-006009 A1 | 08.01.2009 |
| | | WO 2009-048969 A1 | 16.04.2009 |
| | | WO 2011-017663 A1 | 10.02.2011 |
| | | WO 2011-149980 A1 | 01.12.2011 |
| | | WO 2011-149984 A1 | 01.12.2011 |

# PATENT COOPERATION TREATY

TRANSLATION

From the
INTERNATIONAL SEARCHING AUTHORITY

To:

# PCT

WRITTEN OPINION OF THE
INTERNATIONAL SEARCHING AUTHORITY

(PCT Rule 43*bis*.1)

| | |
|---|---|
| Date of mailing *(day/month/year)* | 28.09.2012 |
| Applicant's or agent's file reference: IP117107-PCT | FOR FURTHER ACTION: See paragraph 2 below |

| International application No. | International filing date *(day/month/year)* | Priority date *(day/month/year)* |
|---|---|---|
| PCT/KR2012/001335 | 22.02.2012 | 03.03.2011 |

International Patent Classification (IPC) or both national classification and IPC
A61N1/30(2006.01)i, A61H23/02(2006.01)i, A61M37/00(2006.01)i, A61N5/06(2006.01)i

Applicant
NA, Jongju

1. This opinion contains indications relating to the following items:

- ☒ Box No. I — Basis of the opinion
- ☐ Box No. II — Priority
- ☐ Box No. III — Non-establishment of opinion with regard to novelty, inventive step and industrial applicability
- ☐ Box No. IV — Lack of unity of invention
- ☒ Box No. V — Reasoned statement under Rule 43*bis*.1(a)(i) with regard to novelty, inventive step or industrial applicability; citations and explanations supporting such statement
- ☐ Box No. VI — Certain documents cited
- ☐ Box No. VII — Certain defects in the international application
- ☒ Box No. VIII — Certain observations on the international application

2. **FURTHER ACTION**

If a demand for international preliminary examination is made, this opinion will be considered to be a written opinion of the International Preliminary Examining Authority ("IPEA") except that this does not apply where the applicant chooses an Authority other than this one to be the IPEA and the chosen IPEA has notified the International Bureau under Rule 66.1*bis*(b) that written opinions of this International Searching Authority will not be so considered.

If this opinion is, as provided above, considered to be a written opinion of the IPEA, the applicant is invited to submit to the IPEA a written reply together, where appropriate, with amendments, before the expiration of 3 months from the date of mailing of Form PCT/ISA/220 or before the expiration of 22 months from the priority date, whichever expires later.

For further options, see Form PCT/ISA/220.

| Name and mailing address of the ISA/KR | Date of completion of this opinion | Authorized officer |
|---|---|---|
| Facsimile No | | Telephone No |

**WRITTEN OPINION OF THE INTERNATIONAL SEARCHING AUTHORITY**

International application No.
PCT/KR2012/001335

**Box No. I Basis of this opinion**

1. With regard to the **language**, this opinion has been established on the basis of:

   ☒ the international application in the language in which it was filed

   ☐ a translation of the international application into _____, which is the language of a translation furnished for the purposes of international search (Rules 12.3(a) and 23.1(b)).

2. ☐ This opinion has been established taking into account the **rectification of an obvious mistake** authorized by or notified to this Authority under Rule 91 (Rule 43*bis*.1(a))

3. With regard to any **nucleotide and/or amino acid sequence** disclosed in the international application, this opinion has been established on the basis of a sequence listing filed or furnished:

   a. (means)

      ☐ on paper

      ☐ in electronic form

   b. (time)

      ☐ in the international application as filed

      ☐ together with the international application in electronic form

      ☐ subsequently to this Authority for the purposes of search

4. ☐ In addition, in the case that more than one version or copy of a sequence listing has been filed or furnished, the required statements that the information in the subsequent or additional copies is identical to that in the application as filed or does not go beyond the application as filed, as appropriate, were furnished.

5. Additional comments:

**WRITTEN OPINION OF THE INTERNATIONAL SEARCHING AUTHORITY**

International application No.
PCT/KR2012/001335

**Box No. V** **Reasoned statement under Rule 43bis.1(a)(i) with regard to novelty, inventive step or industrial applicability; citations and explanations supporting such statement**

1. Statement

| | | | |
|---|---|---|---|
| Novelty (N) | Claims | 1-20 | YES |
| | Claims | None | NO |
| Inventive step (IS) | Claims | None | YES |
| | Claims | 1-20 | NO |
| Industrial applicability (IA) | Claims | 1-20 | YES |
| | Claims | None | NO |

2. Citations and explanations:

Reference is made to the following documents:

D1: KR 10-2011-0002210 A (YANG, Won Dong) 07 January 2011
D2: US 2008-0082090 A1 (MANSTEIN, Dieter) 03 April 2008
D3: KR 10-2010-0018288 A (LA, Jong Ju) 17 February 2010
D4: JP 2009-506873 A (THE FOUNDRY, INC.) 19 February 2009

(Notice)
The expression of claim 11 of "power is applied by a needle" is interpreted and determined to be expressed as "power is applied to a needle".

2.1. Novelty and Inventive Step

2.1.1. Independent Claims: Claims 1 and 11

Document D1, which is considered to be the closest prior art to the invention as set forth in claims 1 and 11, discloses an electromagnetic wave skin stimulator (see paragraphs [0024], [0055], and [0057]), comprising: a needle body part (300; see paragraphs [0074], [0075] and [0095] and figure 4) having a plurality of needle bodies protruding toward a lower end surface; a needle body

driving member (420; see paragraphs [0100] and [0211]) which enables a reciprocating operation by moving the needle body part and is composed of a motor and the like; and an electromagnetic wave generation unit (see paragraphs [0078] and [0103]) for enabling the needle bodies to vibrate by applying electromagnetic waves to the needle bodies. Said electromagnetic wave skin stimulator corresponds to a skin tissue care device comprising a tool, a motor, and a signal generator. Claim 1 pertains to a method for caring skin by driving the skin tissue care device. Thus, claim 1 substantially comprises the same technical feature as claim 11.

The invention of claims 1 and 11 differs from the invention disclosed in document D1 in that a needle is protruded as much as a desired distance from an end surface of the tool by the motor. However, document D2 discloses a skin treatment device for controlling a needle (350) so that the needle protrudes at a required length from a bottom surface of a spacer substrate (315) according to the depth of the needle to be inserted into the skin (see paragraphs [0002] and [0036] and figure 3).

The invention as set forth in claims 1 and 11 would be obviously derived by a person skilled in the art from the combination between the invention disclosed in document D1 and the feature disclosed in document D2. Thus, the invention as set forth in claims 1 and 11 is novel under PCT Article 33(2), but lacks an inventive step under PCT Article 33(3).

2.1.2. Dependent Claims: Claims 2 to 10 and 12 to 20

Box No. V Reasoned statement under Rule 43bis.1(a)(i) with regard to novelty, inventive step or industrial applicability; citations and explanations supporting such statement

Claims 2 and 3 are dependent on claim 1 and claims 12 and 13 are dependent on claim 11.

A step of loading a cosmetic article on a skin tissue in claim 2 is the same as a step of drilling the skin using the needle body and injecting a drug therein in document D1 (see paragraph [0062]).

An upper knob and a developing type needle assembly coupled detachably with the upper knob in claims 3 and 13, are substantially the same as a knob unit (60) and a needle body attaching/detaching unit (340) in document D1 (see figure 4 and paragraphs [0073], [0074] and [0099]).

Claims 4, 9, and 10 are dependent on claim 3 and claims 14, 19, and 20 are dependent on claim 13.

A needle developing motor and a driving shaft as set forth in claim 4, claim 7 which is dependent on claim 4, claim 14, and claim 17 which is dependent on claim 14, are substantially the same as the motor for constituting the needle body driving member and a crank part/cam part in document D1 (see paragraphs [0100] and [0211]).

A built-in LED as set forth in claim 5, which is dependent on claim 4, and claim 15, which is dependent on claim 14, is substantially the same as an LED and an electromagnetic wave radiation source in document D2 (see claims 16 and 24). Blue and infrared optical signals as set forth in claim 6, which is dependent on claim 5, and claim 16, which is dependent on claim 15, could be simply selected according to an application area for treatment.

A transparent part for transferring the optical signals

to the needle in claim 8, which is dependent on claim 5, and claim 18, which is dependent on claim 15, is substantially the same as an optical fiber for playing a role of an optical guide in document D2 (see claims 4 and 5).

A radio frequency (RF) signal generator in claims 9, 10, 19, and 20 is substantially the same as the electromagnetic wave generation unit for generating radio waves in document D1 (see paragraph [0107] and claim 11).

An upper end capable of being coupled with the signal generator in claim 12 is substantially the same as the knob part (60) comprising the electromagnetic wave generation unit in document D1 (see paragraph [0071]).

Thus, the invention as set forth in claims 2 to 10 and 12 to 20 is novel under PCT Article 33(2), but lacks an inventive step under PCT Article 33(3).

2.2. Industrial Applicability

The invention as set forth in claims 1 to 20 is industrially applicable under PCT Article 33(4).

WRITTEN OPINION OF THE
INTERNATIONAL SEARCHING AUTHORITY

International application No.
PCT/KR2012/001335

**Box No. VIII** **Certain observations on the international application**

The following observations on the clarity of the claims, description, and drawings or on the question whether the claims are fully supported by the description, are made:

Claim 11 sets forth the feature in which "power is applied by a needle". However, the feature of providing an electrical signal by supplying power to a needle is set forth in the entire part of the description. The feature in which the power is applied by the needle is not supported by the description and does not meet the requirement of PCT Article 6.

# Electronic Patent Application Fee Transmittal

| | |
|---|---|
| **Application Number:** | 15096686 |
| **Filing Date:** | 12-Apr-2016 |
| **Title of Invention:** | METHOD, SYSTEM, AND APPARATUS FOR DERMATOLOGICAL TREATMENT |
| **First Named Inventor/Applicant Name:** | Jongju Na |
| **Filer:** | Merle W. Richman |
| **Attorney Docket Number:** | NA001KR_US2 |

Filed as Small Entity

**Filing Fees for Utility under 35 USC 111(a)**

| Description | Fee Code | Quantity | Amount | Sub-Total in USD($) |
|---|---|---|---|---|
| **Basic Filing:** | | | | |
| **Pages:** | | | | |
| **Claims:** | | | | |
| **Miscellaneous-Filing:** | | | | |
| **Petition:** | | | | |
| **Patent-Appeals-and-Interference:** | | | | |
| **Post-Allowance-and-Post-Issuance:** | | | | |
| **Extension-of-Time:** | | | | |

| Description | Fee Code | Quantity | Amount | Sub-Total in USD($) |
|---|---|---|---|---|
| **Miscellaneous:** | | | | |
| SUBMISSION- INFORMATION DISCLOSURE STMT | 2806 | 1 | 90 | 90 |
| | | **Total in USD ($)** | | **90** |

# Electronic Acknowledgement Receipt

| | |
|---|---|
| **EFS ID:** | 30123710 |
| **Application Number:** | 15096686 |
| **International Application Number:** | |
| **Confirmation Number:** | 2620 |
| **Title of Invention:** | METHOD, SYSTEM, AND APPARATUS FOR DERMATOLOGICAL TREATMENT |
| **First Named Inventor/Applicant Name:** | Jongju Na |
| **Customer Number:** | 26338 |
| **Filer:** | Merle W. Richman |
| **Filer Authorized By:** | |
| **Attorney Docket Number:** | NA001KR_US2 |
| **Receipt Date:** | 18-AUG-2017 |
| **Filing Date:** | 12-APR-2016 |
| **Time Stamp:** | 15:38:55 |
| **Application Type:** | Utility under 35 USC 111(a) |

## Payment information:

| | |
|---|---|
| Submitted with Payment | yes |
| Payment Type | CARD |
| Payment was successfully received in RAM | $90 |
| RAM confirmation Number | 082117INTEFSW15400401 |
| Deposit Account | |
| Authorized User | |

The Director of the USPTO is hereby authorized to charge indicated fees and credit any overpayment as follows:

## File Listing:

| Document Number | Document Description | File Name | File Size(Bytes)/ Message Digest | Multi Part /.zip | Pages (if appl.) |
|---|---|---|---|---|---|
| 1 | Information Disclosure Statement (IDS) Form (SB08) | na001kr_us2-ids.pdf | 1036134<br>d253d677fafbc74cc7037ff70fb077c46a39dd09 | no | 5 |
| **Warnings:** | | | | | |
| **Information:** | | | | | |
| 2 | Foreign Reference | 1020080076993.pdf | 316702<br>7466a619be6d425a3f7f7cef4d76f4720bdd07e6 | no | 9 |
| **Warnings:** | | | | | |
| **Information:** | | | | | |
| 3 | Foreign Reference | 1020090059689.pdf | 519476<br>86ddfbafb601451b8090039cf469735140923fc7 | no | 25 |
| **Warnings:** | | | | | |
| **Information:** | | | | | |
| 4 | Foreign Reference | JPid00000008929341-af.pdf | 18543454<br>8787fed8f954285d17c4cb0e34a69e102430f8b4 | no | 34 |
| **Warnings:** | | | | | |
| **Information:** | | | | | |
| 5 | Other Reference-Patent/App/Search documents | WO2012118293-ETISR-130-af.pdf | 1149016<br>843d3485abfb4aa2d9d30aa04dab08509bc391bd | no | 3 |
| **Warnings:** | | | | | |
| **Information:** | | | | | |
| 6 | Other Reference-Patent/App/Search documents | WO2012118293-ETWOS-971-af.pdf | 1670123<br>9a515f0d4200a6bf430fcb9da5b976d009c308c4 | no | 7 |
| **Warnings:** | | | | | |
| **Information:** | | | | | |

| | | | | | |
|---|---|---|---|---|---|
| 7 | Fee Worksheet (SB06) | fee-info.pdf | 30733<br>41ba9aa78847908d64bdc558e3736cf4299ff72e | no | 2 |

| | |
|---|---|
| **Warnings:** | |
| **Information:** | |
| **Total Files Size (in bytes):** | 23265638 |

**This Acknowledgement Receipt evidences receipt on the noted date by the USPTO of the indicated documents, characterized by the applicant, and including page counts, where applicable. It serves as evidence of receipt similar to a Post Card, as described in MPEP 503.**

**New Applications Under 35 U.S.C. 111**

**If a new application is being filed and the application includes the necessary components for a filing date (see 37 CFR 1.53(b)-(d) and MPEP 506), a Filing Receipt (37 CFR 1.54) will be issued in due course and the date shown on this Acknowledgement Receipt will establish the filing date of the application.**

**National Stage of an International Application under 35 U.S.C. 371**

**If a timely submission to enter the national stage of an international application is compliant with the conditions of 35 U.S.C. 371 and other applicable requirements a Form PCT/DO/EO/903 indicating acceptance of the application as a national stage submission under 35 U.S.C. 371 will be issued in addition to the Filing Receipt, in due course.**

**New International Application Filed with the USPTO as a Receiving Office**

**If a new international application is being filed and the international application includes the necessary components for an international filing date (see PCT Article 11 and MPEP 1810), a Notification of the International Application Number and of the International Filing Date (Form PCT/RO/105) will be issued in due course, subject to prescriptions concerning national security, and the date shown on this Acknowledgement Receipt will establish the international filing date of the application.**

# PART B - FEE(S) TRANSMITTAL

**Complete and send this form, together with applicable fee(s), to: Mail** Mail Stop ISSUE FEE
Commissioner for Patents
P.O. Box 1450
Alexandria, Virginia 22313-1450
**or Fax** (571)-273-2885

INSTRUCTIONS: This form should be used for transmitting the ISSUE FEE and PUBLICATION FEE (if required). Blocks 1 through 5 should be completed where appropriate. All further correspondence including the Patent, advance orders and notification of maintenance fees will be mailed to the current correspondence address as indicated unless corrected below or directed otherwise in Block 1, by (a) specifying a new correspondence address; and/or (b) indicating a separate "FEE ADDRESS" for maintenance fee notifications.

CURRENT CORRESPONDENCE ADDRESS (Note: Use Block 1 for any change of address)

26338 7590 05/19/2017
MERLE W. RICHMAN, III
P.O. BOX 3333
LA JOLLA, CA 92038

Note: A certificate of mailing can only be used for domestic mailings of the Fee(s) Transmittal. This certificate cannot be used for any other accompanying papers. Each additional paper, such as an assignment or formal drawing, must have its own certificate of mailing or transmission.

**Certificate of Mailing or Transmission**
I hereby certify that this Fee(s) Transmittal is being deposited with the United States Postal Service with sufficient postage for first class mail in an envelope addressed to the Mail Stop ISSUE FEE address above, or being facsimile transmitted to the USPTO (571) 273-2885, on the date indicated below.

| | |
|---|---|
| Merle W. Richman, Esq. | (Depositor's name) |
| | (Signature) |
| 8/21/2017 | (Date) |

| APPLICATION NO. | FILING DATE | FIRST NAMED INVENTOR | ATTORNEY DOCKET NO. | CONFIRMATION NO. |
|---|---|---|---|---|
| 15/096,686 | 04/12/2016 | Jongju Na | NA001KR_US2 | 2620 |

TITLE OF INVENTION: METHOD, SYSTEM, AND APPARATUS FOR DERMATOLOGICAL TREATMENT

| APPLN. TYPE | ENTITY STATUS | ISSUE FEE DUE | PUBLICATION FEE DUE | PREV. PAID ISSUE FEE | TOTAL FEE(S) DUE | DATE DUE |
|---|---|---|---|---|---|---|
| nonprovisional | SMALL | $480 | $0 | $0 | $480 | 08/21/2017 |

| EXAMINER | ART UNIT | CLASS-SUBCLASS |
|---|---|---|
| COMSTOCK, DAVID C | 3733 | 600-249000 |

1. Change of correspondence address or indication of "Fee Address" (37 CFR 1.363).
- ☐ Change of correspondence address (or Change of Correspondence Address form PTO/SB/122) attached.
- ☐ "Fee Address" indication (or "Fee Address" Indication form PTO/SB/47; Rev 03-02 or more recent) attached. **Use of a Customer Number is required.**

2. For printing on the patent front page, list
(1) The names of up to 3 registered patent attorneys or agents OR, alternatively,
(2) The name of a single firm (having as a member a registered attorney or agent) and the names of up to 2 registered patent attorneys or agents. If no name is listed, no name will be printed.
1 Merle W. Richman, Esq.
2
3

3. ASSIGNEE NAME AND RESIDENCE DATA TO BE PRINTED ON THE PATENT (print or type)

PLEASE NOTE: Unless an assignee is identified below, no assignee data will appear on the patent. If an assignee is identified below, the document has been filed for recordation as set forth in 37 CFR 3.11. Completion of this form is NOT a substitute for filing an assignment.

(A) NAME OF ASSIGNEE (B) RESIDENCE: (CITY and STATE OR COUNTRY)

Please check the appropriate assignee category or categories (will not be printed on the patent): ☐ Individual ☐ Corporation or other private group entity ☐ Government

4a. The following fee(s) are submitted:
- ☒ Issue Fee
- ☐ Publication Fee (No small entity discount permitted)
- ☐ Advance Order - # of Copies _____

4b. Payment of Fee(s): **(Please first reapply any previously paid issue fee shown above)**
- ☐ A check is enclosed.
- ☐ Payment by credit card. Form PTO-2038 is attached.
- ☐ The director is hereby authorized to charge the required fee(s), any deficiency, or credits any overpayment, to Deposit Account Number _____ (enclose an extra copy of this form).

5. **Change in Entity Status** (from status indicated above)
- ☐ Applicant certifying micro entity status. See 37 CFR 1.29
- ☒ Applicant asserting small entity status. See 37 CFR 1.27
- ☐ Applicant changing to regular undiscounted fee status.

NOTE: Absent a valid certification of Micro Entity Status (see forms PTO/SB/15A and 15B), issue fee payment in the micro entity amount will not be accepted at the risk of application abandonment.

NOTE: If the application was previously under micro entity status, checking this box will be taken to be a notification of loss of entitlement to micro entity status.

NOTE: Checking this box will be taken to be a notification of loss of entitlement to small or micro entity status, as applicable.

NOTE: This form must be signed in accordance with 37 CFR 1.31 and 1.33. See 37 CFR 1.4 for signature requirements and certifications.

Authorized Signature /mwresq/ Date August 21, 2017

Typed or printed name Merle W. Richman, Esq. Registration No. 38,282

# Electronic Patent Application Fee Transmittal

| | |
|---|---|
| **Application Number:** | 15096686 |
| **Filing Date:** | 12-Apr-2016 |
| **Title of Invention:** | METHOD, SYSTEM, AND APPARATUS FOR DERMATOLOGICAL TREATMENT |
| **First Named Inventor/Applicant Name:** | Jongju Na |
| **Filer:** | Merle W. Richman |
| **Attorney Docket Number:** | NA001KR_US2 |

Filed as Small Entity

**Filing Fees for Utility under 35 USC 111(a)**

| Description | Fee Code | Quantity | Amount | Sub-Total in USD($) |
|---|---|---|---|---|
| **Basic Filing:** | | | | |
| **Pages:** | | | | |
| **Claims:** | | | | |
| **Miscellaneous-Filing:** | | | | |
| **Petition:** | | | | |
| **Patent-Appeals-and-Interference:** | | | | |
| **Post-Allowance-and-Post-Issuance:** | | | | |
| UTILITY APPL ISSUE FEE | 2501 | 1 | 480 | 480 |

| Description | Fee Code | Quantity | Amount | Sub-Total in USD($) |
|---|---|---|---|---|
| **Extension-of-Time:** | | | | |
| **Miscellaneous:** | | | | |
| | | | **Total in USD ($)** | **480** |

# Electronic Acknowledgement Receipt

| | |
|---|---|
| **EFS ID:** | 30134941 |
| **Application Number:** | 15096686 |
| **International Application Number:** | |
| **Confirmation Number:** | 2620 |
| **Title of Invention:** | METHOD, SYSTEM, AND APPARATUS FOR DERMATOLOGICAL TREATMENT |
| **First Named Inventor/Applicant Name:** | Jongju Na |
| **Customer Number:** | 26338 |
| **Filer:** | Merle W. Richman |
| **Filer Authorized By:** | |
| **Attorney Docket Number:** | NA001KR_US2 |
| **Receipt Date:** | 21-AUG-2017 |
| **Filing Date:** | 12-APR-2016 |
| **Time Stamp:** | 14:33:13 |
| **Application Type:** | Utility under 35 USC 111(a) |

## Payment information:

| | |
|---|---|
| Submitted with Payment | yes |
| Payment Type | CARD |
| Payment was successfully received in RAM | $480 |
| RAM confirmation Number | 082217INTEFSW14341300 |
| Deposit Account | |
| Authorized User | |
| The Director of the USPTO is hereby authorized to charge indicated fees and credit any overpayment as follows: | |

## File Listing:

| Document Number | Document Description | File Name | File Size(Bytes)/ Message Digest | Multi Part /.zip | Pages (if appl.) |
|---|---|---|---|---|---|
| 1 | Issue Fee Payment (PTO-85B) | na001kr_us2-issue-fee-transmittal-ft.pdf | 678884<br>e105c4f3a744134b48f2a2e36a56fc54f8945c76 | no | 1 |
| **Warnings:** | | | | | |
| **Information:** | | | | | |
| 2 | Fee Worksheet (SB06) | fee-info.pdf | 30757<br>ff74a20a197ce1faae3b6014f5d206f34841023 5 | no | 2 |
| **Warnings:** | | | | | |
| **Information:** | | | | | |
| | | **Total Files Size (in bytes):** | 709641 | | |

**This Acknowledgement Receipt evidences receipt on the noted date by the USPTO of the indicated documents, characterized by the applicant, and including page counts, where applicable. It serves as evidence of receipt similar to a Post Card, as described in MPEP 503.**

**New Applications Under 35 U.S.C. 111**

**If a new application is being filed and the application includes the necessary components for a filing date (see 37 CFR 1.53(b)-(d) and MPEP 506), a Filing Receipt (37 CFR 1.54) will be issued in due course and the date shown on this Acknowledgement Receipt will establish the filing date of the application.**

**National Stage of an International Application under 35 U.S.C. 371**

**If a timely submission to enter the national stage of an international application is compliant with the conditions of 35 U.S.C. 371 and other applicable requirements a Form PCT/DO/EO/903 indicating acceptance of the application as a national stage submission under 35 U.S.C. 371 will be issued in addition to the Filing Receipt, in due course.**

**New International Application Filed with the USPTO as a Receiving Office**

**If a new international application is being filed and the international application includes the necessary components for an international filing date (see PCT Article 11 and MPEP 1810), a Notification of the International Application Number and of the International Filing Date (Form PCT/RO/105) will be issued in due course, subject to prescriptions concerning national security, and the date shown on this Acknowledgement Receipt will establish the international filing date of the application.**

UNITED STATES PATENT AND TRADEMARK OFFICE

UNITED STATES DEPARTMENT OF COMMERCE
United States Patent and Trademark Office
Address: COMMISSIONER FOR PATENTS
P.O. Box 1450
Alexandria, Virginia 22313-1450
www.uspto.gov

| APPLICATION NO. | FILING DATE | FIRST NAMED INVENTOR | ATTORNEY DOCKET NO. | CONFIRMATION NO. |
|---|---|---|---|---|
| 15/096,686 | 04/12/2016 | Jongju Na | NA001KR_US2 | 2620 |

7590 08/24/2017

MERLE W. RICHMAN, III
P.O. BOX 3333
LA JOLLA, CA 92038

| EXAMINER | |
|---|---|
| COMSTOCK, DAVID C | |
| ART UNIT | PAPER NUMBER |
| 3733 | |
| MAIL DATE | DELIVERY MODE |
| 08/24/2017 | PAPER |

# NOTICE OF NON-COMPLIANT INFORMATION DISCLOSURE STATEMENT

An Information Disclosure Statement (IDS) filed 08.18.2017 in the above-identified application fails to meet the requirements of 37 CFR 1.97(d) for the reason(s) specified below. Accordingly, the IDS will be placed in the file, but the information referred to therein has not been considered.

The IDS is not compliant with 37 CFR 1.97(d) because:

☒ The IDS lacks a statement as specified in 37 CFR 1.97(e).

☐ The IDS lacks the fee set forth in 37 CFR 1.17(p).

☐ The IDS was filed after the issue fee was paid. Applicant may wish to consider filing a petition to withdraw the application from issue under 37 CFR 1.313(c) to have the IDS considered. See MPEP 1308.

/Bernice Crittenden/

571-272-4200 or 1-888-786-0101
Application Assistance Unit
Office of Data Management

UNITED STATES PATENT AND TRADEMARK OFFICE

UNITED STATES DEPARTMENT OF COMMERCE
United States Patent and Trademark Office
Address: COMMISSIONER FOR PATENTS
P.O. Box 1450
Alexandria, Virginia 22313-1450
www.uspto.gov

| APPLICATION NO. | ISSUE DATE | PATENT NO. | ATTORNEY DOCKET NO. | CONFIRMATION NO. |
|---|---|---|---|---|
| 15/096,686 | 10/03/2017 | 9775774 | NA001KR_US2 | 2620 |

26338 7590 09/13/2017

MERLE W. RICHMAN, III
P.O. BOX 3333
LA JOLLA, CA 92038

# ISSUE NOTIFICATION

The projected patent number and issue date are specified above.

**Determination of Patent Term Adjustment under 35 U.S.C. 154 (b)**
(application filed on or after May 29, 2000)

The Patent Term Adjustment is 0 day(s). Any patent to issue from the above-identified application will include an indication of the adjustment on the front page.

If a Continued Prosecution Application (CPA) was filed in the above-identified application, the filing date that determines Patent Term Adjustment is the filing date of the most recent CPA.

Applicant will be able to obtain more detailed information by accessing the Patent Application Information Retrieval (PAIR) WEB site (http://pair.uspto.gov).

Any questions regarding the Patent Term Extension or Adjustment determination should be directed to the Office of Patent Legal Administration at (571)-272-7702. Questions relating to issue and publication fee payments should be directed to the Application Assistance Unit (AAU) of the Office of Data Management (ODM) at (571)-272-4200.

APPLICANT(s) (Please see PAIR WEB site http://pair.uspto.gov for additional applicants):

Jongju Na, Songpa-Gu, KOREA, REPUBLIC OF;

The United States represents the largest, most dynamic marketplace in the world and is an unparalleled location for business investment, innovation, and commercialization of new technologies. The USA offers tremendous resources and advantages for those who invest and manufacture goods here. Through SelectUSA, our nation works to encourage and facilitate business investment. To learn more about why the USA is the best country in the world to develop technology, manufacture products, and grow your business, visit SelectUSA.gov.

# PATENT ASSIGNMENT COVER SHEET

Electronic Version v1.1
Stylesheet Version v1.2

EPAS ID: PAT6424983

| | |
|---|---|
| **SUBMISSION TYPE:** | NEW ASSIGNMENT |
| **NATURE OF CONVEYANCE:** | ASSIGNMENT |

**CONVEYING PARTY DATA**

| Name | Execution Date |
|---|---|
| VIOL CO., LTD. | 11/26/2020 |

**RECEIVING PARTY DATA**

| | |
|---|---|
| **Name:** | SERENDIA LLC |
| **Street Address:** | 31631 PASEO DON JOSE |
| **City:** | SAN JUAN CAPISTRANO |
| **State/Country:** | CALIFORNIA |
| **Postal Code:** | 92675 |

**PROPERTY NUMBERS Total: 8**

| Property Type | Number |
|---|---|
| **Patent Number:** | 9480836 |
| **Patent Number:** | 10058379 |
| **Patent Number:** | 10799286 |
| **Patent Number:** | 8979912 |
| **Patent Number:** | 9320536 |
| **Patent Number:** | 9775774 |
| **Patent Number:** | 9630002 |
| **Application Number:** | 15095098 |

**CORRESPONDENCE DATA**

**Fax Number:**

***Correspondence will be sent to the e-mail address first; if that is unsuccessful, it will be sent using a fax number, if provided; if that is unsuccessful, it will be sent via US Mail.***

**Phone:** 9493512006
**Email:** ks.im@ideahub.co.kr
**Correspondent Name:** KYEONGSU IM
**Address Line 1:** 9880 IRVINE CENTER DRIVE
**Address Line 4:** IRVINE, CALIFORNIA 92618

| | |
|---|---|
| **NAME OF SUBMITTER:** | KYEONGSU IM |
| **SIGNATURE:** | /keith k. lm/ |
| **DATE SIGNED:** | 12/01/2020 |

| | |
|---|---|
| | This document serves as an Oath/Declaration (37 CFR 1.63). |

**Total Attachments: 2**
source=Patent Assignment#page1.tif
source=Patent Assignment#page2.tif

**EXHIBIT B**

**INTELLECTUAL PROPERTY ASSIGNMENT AGREEMENT**

WHEREAS, **Viol Co., Ltd.** a corporation organized and existing under the laws of Republic of Korea, having an address at #808, #809 Bundang Technopark C, 744 Pangyo-ro, Bundang-gu, Seongnam-si Gyeonggi-do 13510 South Korea (hereinafter, "ASSIGNOR") is the sole and exclusive owner of certain United States and/or patent applications listed in Schedule A annexed hereto (collectively referred to as the "Patents"); and

WHEREAS, **Serendia, LLC**, a California Limited Liability Company having a place of business at 31631 Paseo Don Jose, San Juan Capistrano, CA 92675. (hereinafter, "ASSIGNEE") is desirous of acquiring the right, title and interest in, to and under the said Patents (and all foreign counterparts and related foreign patents).

*Now, Therefore,*

For good and valuable consideration, the receipt of which is hereby acknowledged, ASSIGNOR does hereby assigns, transfers and sets over to ASSIGNEE, the Patents aforesaid, and any inventions claimed in said Patents, any reissue or reissues of said Patents already granted and which may be granted, any certificates of reexamination already granted and which may be granted the same to be held and enjoyed by ASSIGNEE for its own use and enjoyment, and for the use and enjoyment of its successors, assigns or other legal representatives, to the end of the term or terms for which said Patents are or may be granted, reissued or extended as fully and entirely as the same would have been held and enjoyed by ASSIGNOR, if this assignment and sale had not been made; together with all claims for damages by reason of past, current, and future infringement and/or provisional rights under said Patents, with the right to sue for, and collect the same for its own use and behalf, and for the use and behalf of its successors, assigns or other legal representatives.

And, ASSIGNOR, hereby authorizes and requests the Commissioner of Patents and Trademarks to issue any and all Letters Patents of the United States on said inventions to ASSIGNEE as assignee of the entire interest, and hereby covenants that ASSIGNOR has full right to convey the entire interest herein assigned, and that, except as otherwise provided between the Parties, ASSIGNOR has not executed, and will not execute, any agreements in conflict therewith.

In Witness Whereof, ASSIGNOR has caused this Intellectual Property Assignment Agreement to be executed by its duly authorized representative.

**VIOL CO., LTD.**

By: _____

Name: Lee Sang Jun

Title: CEO

Date: 11/26/20

**SERENDIA, LLC**

By: _____

Name: Song'u Na

Title: General manager

Date: 11/26/20

## SCHEDULE A

| Family | Pat/Pub. No. | Title | Inventor | Filing no. | Filing Date | Expiry |
|---|---|---|---|---|---|---|
| 1 | US9480836 | Skin treatment apparatus and method | Na; Jongju | US14/006930 | 2012.06.14 | 2032.07.10 |
| | US10058379 | Electrically based medical treatment device and method | Na; Jongju | US15/202511 | 2016.07.05 | 2032.08.19 |
| | US20180360528A1 | ELECTRICALLY BASED MEDICAL TREATMENT DEVICE AND METHOD | Na; Jongju | US16/111616 | 2018.08.24 | |
| 2 | US8979912 | Method, system, and apparatus for dermalogical treatment | Na; Jongju\|Richman; Merle | US13/060274 | 2008.08.22 | 2030.05.27 |
| | US9320536 | Method, system, and apparatus for dermatological treatment | Na; Jongju | US13/825083 | 2012.02.22 | 2032.07.23 |
| | US9775774 | Method, system, and apparatus for dermatological treatment | Na; Jongju | US15/096686 | 2016.04.12 | 2036.04.12 |
| | US9630002 | Method, system, and apparatus for dermatological treatment | Na; Jongju\|Richman; Merle | US14/598208 | 2015.01.15 | 2028.08.22 |
| | US20170014305A1 | METHOD, SYSTEM, AND APPARATUS FOR DERMATOLOGICAL TREATMENT | Na; Jongju\|Richman; Merle | US15/095098 | 2016.04.10 | |

The United States Patent and Trademark Office
PATENT TRIAL AND APPEAL BOARD

A petition has been filed in Patent Number 9,775,774, Application Number 15/096,686 on 12/28/2021 (Date).

The Case Number is IPR2022-00376.
(IPR, CBM, PGR, DER #)

To view the documents filed in this petition, go to https://ptab.uspto.gov.

Use the Search PTAB tab and enter the Patent Number or the Trial or Case Number and select the Search button.

Questions regarding this notice should be directed to the Patent Trial and Appeal Board at 571-272-7822.

Trials@uspto.gov
571-272-7822

Paper 9
Entered: June 27, 2022

UNITED STATES PATENT AND TRADEMARK OFFICE

---

BEFORE THE PATENT TRIAL AND APPEAL BOARD

---

CARTESSA AESTHETICS, LLC,
Petitioner,

v.

SERENDIA, LLC,
Patent Owner.

---

IPR2022-00376
Patent 9,775,774 B2

---

Before SHERIDAN K. SNEDDEN, CARL M. DEFRANCO, and TINA E. HULSE, *Administrative Patent Judges*.

DEFRANCO, *Administrative Patent Judge*.

DECISION
Denying Institution of *Inter Partes* Review
*35 U.S.C. § 314*

Serendia, LLC ("Serendia") is the owner of U.S. Patent No. 9,775,774 B2 (Ex. 1001, "the '774 patent").[1] Cartessa Aesthetics, LLC ("Cartessa")

---

[1] Serendia identifies SynKloud Technologies, LLC as having the exclusive right to assert the '774 patent. *See* Paper 4.

filed a Petition requesting *inter partes* review of claims 1–7 and 9–19 of the '774 patent.[2] Paper 1 ("Pet."). Serendia filed a Preliminary Response. Paper 8 ("Prelim. Resp."). Because Cartessa's Petition fails to demonstrate a reasonable likelihood that any of the challenged claims are unpatentable, we deny institution of *inter partes* review. *See* 35 U.S.C. § 314(a) (2018).

## I. BACKGROUND

### *A. Related Matters*

Also pending before the Office are petitions filed by Cartessa for *inter partes* review of two related patents, namely, U.S. Patent Nos. 10,869,812 B2 (IPR2022-00377) and 9,320,536 B2 (IPR2022-00378). Pet. 2. Those patents, along with the '774 patent at issue here, are the subject of an infringement action filed August 6, 2021[3] in *SynKloud Techs., LLC v. Cartessa Aesthetics, LLC*, No. 2:21-cv-04423 (E.D.N.Y.) ("New York action"). *See id.*; *see also* Paper 4 (Patent Owner Mandatory Notice). According to the district court's docket, that action has been stayed pending the outcome of our review of Cartessa's Petition here and in the related proceedings.

The '774 patent is also the subject of an infringement action in *SynKloud Techs., LLC v. Sung Hwan E&B Co., Ltd.*, No. 6:21-cv-00811 (W.D. Tex.) ("Texas action"), which appears to have been filed the same day as the New York action. Paper 4. We are not apprised of the status of the Texas action.

---

[2] Cartessa identifies Sung Hwan E&B Co., Ltd. as also being a real party-in-interest. *See* Pet. 2.

[3] The original complaint did not assert the '774 patent, but the complaint was later amended to do so on November 3, 2021. Pet. 2 n.1.

*B. The '774 Patent*

The '774 patent is directed to an apparatus and method "used in treating dermatological tissue." Ex. 1001, 1:30–32. As described and shown in the '774 patent, the "dermatological treatment apparatus" comprises "a user handle 220 coupled to an acupuncture plate 200." *Id.* at 2:60–64, Figs. 1A, 1B. The acupuncture plate includes "a plurality of acupuncture pins or needles 230." *Id.* at 3:3–9, Figs. 1B, 1C. In operation, a user employs the apparatus "to create a plurality of micro-wounds or holes in dermatological layers of a mammal's . . . skin or dermis." *Id.* at 3:32–34. Creating such micro-wounds or holes in the skin "may improve the absorption or application of one or more chemicals applied on or about the micro-wounds or holes" (*id.* at 3:34–37) and "may increase cellular activity and help heal tissue faster and facilitate the delivery, uptake and use in the cell of the cosmetics, medications, or chemicals [] used" (*id.* at 8:5–8).

To assist in creating the micro-wounds or holes in the skin, "electrical signal generation system 300 may be electrically coupled to the acupuncture apparatus 320 via one or more wires 300A and to a mammal 20 to be treated via one or more wires 300B" so as to "generate a variety of signals . . . to vibrate one or more pins 351 electrically coupled to the system 300." *Id.* at 3:41–60, Figs. 2A–2C. In addition, the dermatological treatment apparatus may include "a disposable needle module 924 . . . to be removed and disposed after one or more treatments or for each patient, client, or user." *Id.* at 9:47–51, Figs. 9C–9D, 10A–10D.

*C. The Sole Challenge*

| Claims Challenged | 35 U.S.C. § | Basis |
|---|---|---|
| 1–7, 9–19 | 103 | Morris[4] and Pearson[5] |

In further support of this challenge, Cartessa submits the declaration of Robert E. Grove, Ph.D. *See* Ex. 1007. Serendia submits a rebuttal declaration from Paul Stauffer. *See* Ex. 2002.

*D. The Challenged Claims*

Two of the challenged claims are independent—claims 1 and 11. Claim 1 is a method claim, while claim 11 is an apparatus claim. In challenging these claims, Cartessa "starts with claim 11" (Pet. 15), which recites:

> 11. An apparatus for *treating dermatological tissue*, comprising:
>
> a device including a plurality of needles one of extending or extendable a desired distance from a surface, the desired distance selected to *enable the plurality of needles to penetrate dermatological tissue*; and
>
> a signal generator electrically coupled to the plurality of extended needles to produce pulsed radio frequency signals across the plurality of needles to *affect dermatological tissue near the plurality of needles*.

Ex. 1001, 16:34–43 (emphases added).

[4] US 2002/0120260 A1, published August 29, 2002 (Ex. 1002, "Morris").

[5] US 2003/0130711 A1, published July 10, 2003 (Ex. 1003, "Pearson").

## II. ANALYSIS

### *A. Claim Construction*

We apply the claim construction standard set forth in *Phillips v. AWH Corp.*, 415 F.3d 1303, 1312–13 (Fed. Cir. 2005) (en banc). That is, "the words of a claim 'are generally given their ordinary and customary meaning' . . . that the term would have to a person of ordinary skill in the art in question at the time of the invention." *Id.* at 1312–13; *see also* 37 C.F.R. § 42.100(b). Here, Cartessa asserts that we need not construe any claim terms aside from assigning them their ordinary and customary meaning. Pet. 14. Serendia proposes that we construe the claim limitation reciting the production of "pulsed radio frequency signals across the plurality of needles to affect dermatological tissue near the plurality of needles." Prelim. Resp. 16–20. We do not perceive the need to expressly construe that limitation in order to decide the threshold question of institution in this case. *See Nidec Motor Corp. v. Zhongshan Broad Ocean Motor Co.*, 868 F.3d 1013, 1017 (Fed. Cir. 2017) (approving Board decision not to construe claim language where the construction is not material to the dispute).

### *B. Level of Ordinary Skill in the Art*

Cartessa's declarant, Dr. Grove, testifies that one skilled in the art during the relevant time frame "would typically have had (1) seven to ten years of experience with development and/or use of treatment systems for delivery of electromagnetic radiation energy to skin or other tissues, and (2) a related graduate engineering degree or M.D." and "may have worked as part of a multidisciplinary team and drawn upon not only his or her own skills, but also taken advantage of certain specialized skills of others on the team when solving a technical problem." Ex. 1007 ¶ 27. Serendia does not

contest Dr. Grove's articulation of the level of skill in the art. *See generally* Prelim. Resp. Nor do we see any reason to question it. Thus, for purposes of this decision, we analyze the asserted prior art with that level of skill in mind.

*C. Independent Claim 11 (and its dependents)*

As does Cartessa (*see* Pet. 15), we begin with claim 11, assessing whether the Petition supports a reasonable likelihood that the claimed "apparatus" is unpatentable as obvious over the asserted combination of Morris and Pearson. Cartessa maps the limitations of apparatus claim 11 to various teachings of Morris and Pearson (*see id.* at 16–29) and contends that one skilled in the art would have combined those teachings because "Pearson is an extension of Morris" given they share "common inventors" (*id.* at 29–30). Although Cartessa's reason for combining the teachings of Morris and Pearson may find support in the record, we find that Cartessa fails in its showing that the asserted combination discloses or otherwise suggests an apparatus pertaining to the treatment of "dermatological tissue," as required by claim 11.

More specifically, claim 11 recites that the apparatus "treat[s] dermatological tissue" with a plurality of needles that "penetrate dermatological tissue" and "affect dermatological tissue near the plurality of needles." Ex. 1001, 16:34–43. For those limitations, Cartessa points to disclosures in Morris that concern *ablation of tumor tissue*, not treatment of dermatological tissue. Pet. 17–25 (citing Ex. 1002 ¶¶ 2, 78–79, 113, 124, 145–146). In doing so, Cartessa acknowledges that "dermatological tissue" as recited in claim 11 "is skin." *Id.* at 17. But nowhere do we discern that the cited disclosures in Morris relate to the treatment of dermatological

tissue, i.e., skin, as claimed. Rather, Morris is directed to an entirely different application, namely, the ablation of tumors.

In that regard, Morris focuses exclusively on "the minimally invasive treatment *and ablation of tissue masses such as tumors*" using "independently deployable electrodes configured to controllably *ablate a tumor* proximate or beneath a tissue surface." Ex. 1002 ¶ 2 (emphases added); *see also id.* ¶ 192 ("It will be appreciated that the applicants have provided a novel and useful apparatus and method for the treatment of tumors using surgical or minimally invasive methods."). Indeed, throughout Morris, the discussion centers on the apparatus's ability to ablate unhealthy tumor masses in target organs such as the liver and prostate while minimizing unwanted heating of surrounding healthy tissue. *See id.* ¶¶ 4–6, 78–79, 91, 122, 126–127, 155, 161, 178, 192. Likewise, all the features of Morris's apparatus, such as the configuration of the electrodes, depth of the deployed electrodes, and frequency and duty cycle of RF power supplied to the deployed electrodes, speak to treatment of the tumor mass by "ablation." *See id.* ¶¶ 7, 81, 91–92, 113, 124–127, 129, 144–147, 155, 170, 179–180, 191. Morris's clear and unequivocal focus on using the disclosed apparatus for the treatment and ablation of harmful tumor cells, in our view, negates the use of such an apparatus for the treatment and healing of skin cells.

That ablation of harmful tumor cells does not equate to treatment of skin cells is further supported by Morris's disclosure that the electrodes are deployed "into a tumor or tissue mass so as . . . to precisely treat the tumor while avoiding adjacent critical anatomical structures such as vasculature (e.g. hepatic veins) and nerve plexi." *Id.* ¶ 79; *see also id.* ¶ 78 ("deploy electrodes into the tumor while avoiding and minimizing injury to adjacent

critical anatomical structures that are adjacent and underneath the target tumor mass"). To that end, the electrodes are positioned "to heat, necrose, or ablate any selected target tissue volume" and "to create a variety of different geometric ablation volumes or cell necrosis zones." *Id.* ¶¶ 114, 145. Notably, Morris further explains:

> The heating causes tissue temperature to rise sufficiently *to cause cell injury and death* particularly for temperatures in excess of 50-55° C. Increased amounts of power will result[] in higher temperature and greater magnitude of cell death it is desirable to be able to deliver a range of RF power levels depending upon a variety of parameters include but not limited to tumor size, tissue type, tumor location and amount of tumor vascularization.

*Id.* ¶ 124 (emphasis added). Indeed, given the increased power levels used by Morris's apparatus in performing tumor ablation, Morris provides precautionary measures "to prevent any appreciable heating of the patient's skin." *Id.* ¶ 154.

After reviewing Morris's disclosure as a whole, we highly doubt one skilled in the art would consider the claimed apparatus, where acupuncture needles are used for the treatment of skin, to be an obvious variant of Morris's apparatus, where ablation electrodes are used to cause "cell injury and death." *Compare* Ex. 1001, 3:3–11, 3:17–21, 3:32–60, Figs. 1B, 2A, *with* Ex. 1002 ¶¶ 124, 129, 145, Figs. 1, 22, 31. More likely than not, Morris's disclosure supports a clear distinction between tumor ablation and skin treatment such that one skilled in the art would not consider Morris's ablation apparatus to be suitable for skin treatment. *See, e.g.*, Ex. 2002 ¶¶ 15, 46, 50.

Nor does Cartessa's addition of Pearson compensate for the deficiencies of Morris in the asserted combination. That is because Cartessa

relies on Pearson for teaching something other than the "dermatological" limitations of claim 11. *See* Pet. 27–30 (relying on Pearson only for the "pulsed radio frequency signals" limitation). In any event, we find that Pearson does not cure the deficiencies of Morris because, as Cartessa acknowledges, Pearson, like Morris, relates to ablation of undesirable tumor cells. *See id.* at 29 (citing Ex. 1003 ¶¶ 2–4). Nor does the testimony of Cartessa's declarant relieve our concerns with Cartessa's showing, as the testimony merely parrots, essentially verbatim, the arguments in the Petition. *Compare* Ex. 1007 ¶¶ 66–71, *with* Pet. 15–17.

In the end, because the asserted combination of Morris and Pearson lacks the limitations of claim 11 requiring that the apparatus "treat[] dermatological tissue," "penetrate dermatological tissue," and "affect dermatological tissue," we determine that Cartessa's Petition fails to support a reasonable likelihood that claim 11 is unpatentable as obvious over Morris and Pearson. And because Cartessa's challenge of dependent claims 12–19 suffers the same deficiencies, we likewise determine that Cartessa falls short in demonstrating a reasonable likelihood that those dependent claims are unpatentable as obvious over Morris and Pearson.

*D. Independent Claim 1 (and its dependents)*

Like apparatus claim 11, method claim 1 recites limitations directed to treating "dermatological tissue." Ex. 1001, 15:48–57. Cartessa's challenge of claim 1, as well as dependent claims 2–7, 9, and 10, relies on the same challenge and arguments as asserted against claims 11–19. *See* Pet. 44–45 (asserting that "[i]ndependent claim 1 is similar to claim 11" and "[t]hus, for brevity, Petitioner refers back to the analysis of claim 11 for the overlapping limitations"). For the same reasons discussed above with respect to claims

11–19, we determine that Cartessa fails to demonstrate a reasonable likelihood that claims 1–7, 9, and 10 are unpatentable as obvious over Morris and Pearson.

## III. CONCLUSION

For the above reasons, we decline to institute *inter partes* review of any of the challenged claims of the '774 patent.

## IV. ORDER

Accordingly, it is:

ORDERED that the Petition is *denied*.

For PETITIONER:

Richard LaCava
Taniel Anderson
Jasjit S. Vidwan
ARENT FOX LLP
richard.lacava@arentfox.com
taniel.anderson@arentfox.com
jasjit.vidwan@arentfox.com

For PATENT OWNER:

Dr. Gregory J. Gonsalves
Yeasun Yoon
CAPITOL IP LAW GROUP, PLLC
gonsalves@capitoliplaw.com
yoon@capitoliplaw.com

Trials@uspto.gov
571-272-7822

Paper 9
Entered: June 27, 2022

UNITED STATES PATENT AND TRADEMARK OFFICE

---

BEFORE THE PATENT TRIAL AND APPEAL BOARD

---

CARTESSA AESTHETICS, LLC,
Petitioner,

v.

SERENDIA, LLC,
Patent Owner.

---

IPR2022-00376
Patent 9,775,774 B2

---

Before SHERIDAN K. SNEDDEN, CARL M. DEFRANCO, and TINA E. HULSE, *Administrative Patent Judges*.

DEFRANCO, *Administrative Patent Judge*.

DECISION
Denying Institution of *Inter Partes* Review
*35 U.S.C. § 314*

Serendia, LLC ("Serendia") is the owner of U.S. Patent No. 9,775,774 B2 (Ex. 1001, "the '774 patent").[1] Cartessa Aesthetics, LLC ("Cartessa")

---

[1] Serendia identifies SynKloud Technologies, LLC as having the exclusive right to assert the '774 patent. *See* Paper 4.

filed a Petition requesting *inter partes* review of claims 1–7 and 9–19 of the '774 patent.[2] Paper 1 ("Pet."). Serendia filed a Preliminary Response. Paper 8 ("Prelim. Resp."). Because Cartessa's Petition fails to demonstrate a reasonable likelihood that any of the challenged claims are unpatentable, we deny institution of *inter partes* review. *See* 35 U.S.C. § 314(a) (2018).

## I. BACKGROUND

### *A. Related Matters*

Also pending before the Office are petitions filed by Cartessa for *inter partes* review of two related patents, namely, U.S. Patent Nos. 10,869,812 B2 (IPR2022-00377) and 9,320,536 B2 (IPR2022-00378). Pet. 2. Those patents, along with the '774 patent at issue here, are the subject of an infringement action filed August 6, 2021[3] in *SynKloud Techs., LLC v. Cartessa Aesthetics, LLC*, No. 2:21-cv-04423 (E.D.N.Y.) ("New York action"). *See id.*; *see also* Paper 4 (Patent Owner Mandatory Notice). According to the district court's docket, that action has been stayed pending the outcome of our review of Cartessa's Petition here and in the related proceedings.

The '774 patent is also the subject of an infringement action in *SynKloud Techs., LLC v. Sung Hwan E&B Co., Ltd.*, No. 6:21-cv-00811 (W.D. Tex.) ("Texas action"), which appears to have been filed the same day as the New York action. Paper 4. We are not apprised of the status of the Texas action.

---

[2] Cartessa identifies Sung Hwan E&B Co., Ltd. as also being a real party-in-interest. *See* Pet. 2.

[3] The original complaint did not assert the '774 patent, but the complaint was later amended to do so on November 3, 2021. Pet. 2 n.1.

*B. The '774 Patent*

The '774 patent is directed to an apparatus and method "used in treating dermatological tissue." Ex. 1001, 1:30–32. As described and shown in the '774 patent, the "dermatological treatment apparatus" comprises "a user handle 220 coupled to an acupuncture plate 200." *Id.* at 2:60–64, Figs. 1A, 1B. The acupuncture plate includes "a plurality of acupuncture pins or needles 230." *Id.* at 3:3–9, Figs. 1B, 1C. In operation, a user employs the apparatus "to create a plurality of micro-wounds or holes in dermatological layers of a mammal's . . . skin or dermis." *Id.* at 3:32–34. Creating such micro-wounds or holes in the skin "may improve the absorption or application of one or more chemicals applied on or about the micro-wounds or holes" (*id.* at 3:34–37) and "may increase cellular activity and help heal tissue faster and facilitate the delivery, uptake and use in the cell of the cosmetics, medications, or chemicals [] used" (*id.* at 8:5–8).

To assist in creating the micro-wounds or holes in the skin, "electrical signal generation system 300 may be electrically coupled to the acupuncture apparatus 320 via one or more wires 300A and to a mammal 20 to be treated via one or more wires 300B" so as to "generate a variety of signals . . . to vibrate one or more pins 351 electrically coupled to the system 300." *Id.* at 3:41–60, Figs. 2A–2C. In addition, the dermatological treatment apparatus may include "a disposable needle module 924 . . . to be removed and disposed after one or more treatments or for each patient, client, or user." *Id.* at 9:47–51, Figs. 9C–9D, 10A–10D.

*C. The Sole Challenge*

| Claims Challenged | 35 U.S.C. § | Basis |
|---|---|---|
| 1–7, 9–19 | 103 | Morris[4] and Pearson[5] |

In further support of this challenge, Cartessa submits the declaration of Robert E. Grove, Ph.D. *See* Ex. 1007. Serendia submits a rebuttal declaration from Paul Stauffer. *See* Ex. 2002.

*D. The Challenged Claims*

Two of the challenged claims are independent—claims 1 and 11. Claim 1 is a method claim, while claim 11 is an apparatus claim. In challenging these claims, Cartessa "starts with claim 11" (Pet. 15), which recites:

> 11. An apparatus for *treating dermatological tissue*, comprising:
>
> a device including a plurality of needles one of extending or extendable a desired distance from a surface, the desired distance selected to *enable the plurality of needles to penetrate dermatological tissue*; and
>
> a signal generator electrically coupled to the plurality of extended needles to produce pulsed radio frequency signals across the plurality of needles to *affect dermatological tissue near the plurality of needles*.

Ex. 1001, 16:34–43 (emphases added).

[4] US 2002/0120260 A1, published August 29, 2002 (Ex. 1002, "Morris").

[5] US 2003/0130711 A1, published July 10, 2003 (Ex. 1003, "Pearson").

## II. ANALYSIS

### *A. Claim Construction*

We apply the claim construction standard set forth in *Phillips v. AWH Corp.*, 415 F.3d 1303, 1312–13 (Fed. Cir. 2005) (en banc). That is, "the words of a claim 'are generally given their ordinary and customary meaning' . . . that the term would have to a person of ordinary skill in the art in question at the time of the invention." *Id.* at 1312–13; *see also* 37 C.F.R. § 42.100(b). Here, Cartessa asserts that we need not construe any claim terms aside from assigning them their ordinary and customary meaning. Pet. 14. Serendia proposes that we construe the claim limitation reciting the production of "pulsed radio frequency signals across the plurality of needles to affect dermatological tissue near the plurality of needles." Prelim. Resp. 16–20. We do not perceive the need to expressly construe that limitation in order to decide the threshold question of institution in this case. *See Nidec Motor Corp. v. Zhongshan Broad Ocean Motor Co.*, 868 F.3d 1013, 1017 (Fed. Cir. 2017) (approving Board decision not to construe claim language where the construction is not material to the dispute).

### *B. Level of Ordinary Skill in the Art*

Cartessa's declarant, Dr. Grove, testifies that one skilled in the art during the relevant time frame "would typically have had (1) seven to ten years of experience with development and/or use of treatment systems for delivery of electromagnetic radiation energy to skin or other tissues, and (2) a related graduate engineering degree or M.D." and "may have worked as part of a multidisciplinary team and drawn upon not only his or her own skills, but also taken advantage of certain specialized skills of others on the team when solving a technical problem." Ex. 1007 ¶ 27. Serendia does not

contest Dr. Grove's articulation of the level of skill in the art. *See generally* Prelim. Resp. Nor do we see any reason to question it. Thus, for purposes of this decision, we analyze the asserted prior art with that level of skill in mind.

*C. Independent Claim 11 (and its dependents)*

As does Cartessa (*see* Pet. 15), we begin with claim 11, assessing whether the Petition supports a reasonable likelihood that the claimed "apparatus" is unpatentable as obvious over the asserted combination of Morris and Pearson. Cartessa maps the limitations of apparatus claim 11 to various teachings of Morris and Pearson (*see id.* at 16–29) and contends that one skilled in the art would have combined those teachings because "Pearson is an extension of Morris" given they share "common inventors" (*id.* at 29–30). Although Cartessa's reason for combining the teachings of Morris and Pearson may find support in the record, we find that Cartessa fails in its showing that the asserted combination discloses or otherwise suggests an apparatus pertaining to the treatment of "dermatological tissue," as required by claim 11.

More specifically, claim 11 recites that the apparatus "treat[s] dermatological tissue" with a plurality of needles that "penetrate dermatological tissue" and "affect dermatological tissue near the plurality of needles." Ex. 1001, 16:34–43. For those limitations, Cartessa points to disclosures in Morris that concern *ablation of tumor tissue*, not treatment of dermatological tissue. Pet. 17–25 (citing Ex. 1002 ¶¶ 2, 78–79, 113, 124, 145–146). In doing so, Cartessa acknowledges that "dermatological tissue" as recited in claim 11 "is skin." *Id.* at 17. But nowhere do we discern that the cited disclosures in Morris relate to the treatment of dermatological

tissue, i.e., skin, as claimed. Rather, Morris is directed to an entirely different application, namely, the ablation of tumors.

In that regard, Morris focuses exclusively on "the minimally invasive treatment *and ablation of tissue masses such as tumors*" using "independently deployable electrodes configured to controllably *ablate a tumor* proximate or beneath a tissue surface." Ex. 1002 ¶ 2 (emphases added); *see also id.* ¶ 192 ("It will be appreciated that the applicants have provided a novel and useful apparatus and method for the treatment of tumors using surgical or minimally invasive methods."). Indeed, throughout Morris, the discussion centers on the apparatus's ability to ablate unhealthy tumor masses in target organs such as the liver and prostate while minimizing unwanted heating of surrounding healthy tissue. *See id.* ¶¶ 4–6, 78–79, 91, 122, 126–127, 155, 161, 178, 192. Likewise, all the features of Morris's apparatus, such as the configuration of the electrodes, depth of the deployed electrodes, and frequency and duty cycle of RF power supplied to the deployed electrodes, speak to treatment of the tumor mass by "ablation." *See id.* ¶¶ 7, 81, 91–92, 113, 124–127, 129, 144–147, 155, 170, 179–180, 191. Morris's clear and unequivocal focus on using the disclosed apparatus for the treatment and ablation of harmful tumor cells, in our view, negates the use of such an apparatus for the treatment and healing of skin cells.

That ablation of harmful tumor cells does not equate to treatment of skin cells is further supported by Morris's disclosure that the electrodes are deployed "into a tumor or tissue mass so as . . . to precisely treat the tumor while avoiding adjacent critical anatomical structures such as vasculature (e.g. hepatic veins) and nerve plexi." *Id.* ¶ 79; *see also id.* ¶ 78 ("deploy electrodes into the tumor while avoiding and minimizing injury to adjacent

critical anatomical structures that are adjacent and underneath the target tumor mass"). To that end, the electrodes are positioned "to heat, necrose, or ablate any selected target tissue volume" and "to create a variety of different geometric ablation volumes or cell necrosis zones." *Id.* ¶¶ 114, 145. Notably, Morris further explains:

> The heating causes tissue temperature to rise sufficiently *to cause cell injury and death* particularly for temperatures in excess of 50-55° C. Increased amounts of power will result[] in higher temperature and greater magnitude of cell death it is desirable to be able to deliver a range of RF power levels depending upon a variety of parameters include but not limited to tumor size, tissue type, tumor location and amount of tumor vascularization.

*Id.* ¶ 124 (emphasis added). Indeed, given the increased power levels used by Morris's apparatus in performing tumor ablation, Morris provides precautionary measures "to prevent any appreciable heating of the patient's skin." *Id.* ¶ 154.

After reviewing Morris's disclosure as a whole, we highly doubt one skilled in the art would consider the claimed apparatus, where acupuncture needles are used for the treatment of skin, to be an obvious variant of Morris's apparatus, where ablation electrodes are used to cause "cell injury and death." *Compare* Ex. 1001, 3:3–11, 3:17–21, 3:32–60, Figs. 1B, 2A, *with* Ex. 1002 ¶¶ 124, 129, 145, Figs. 1, 22, 31. More likely than not, Morris's disclosure supports a clear distinction between tumor ablation and skin treatment such that one skilled in the art would not consider Morris's ablation apparatus to be suitable for skin treatment. *See, e.g.*, Ex. 2002 ¶¶ 15, 46, 50.

Nor does Cartessa's addition of Pearson compensate for the deficiencies of Morris in the asserted combination. That is because Cartessa

relies on Pearson for teaching something other than the "dermatological" limitations of claim 11. *See* Pet. 27–30 (relying on Pearson only for the "pulsed radio frequency signals" limitation). In any event, we find that Pearson does not cure the deficiencies of Morris because, as Cartessa acknowledges, Pearson, like Morris, relates to ablation of undesirable tumor cells. *See id.* at 29 (citing Ex. 1003 ¶¶ 2–4). Nor does the testimony of Cartessa's declarant relieve our concerns with Cartessa's showing, as the testimony merely parrots, essentially verbatim, the arguments in the Petition. *Compare* Ex. 1007 ¶¶ 66–71, *with* Pet. 15–17.

In the end, because the asserted combination of Morris and Pearson lacks the limitations of claim 11 requiring that the apparatus "treat[] dermatological tissue," "penetrate dermatological tissue," and "affect dermatological tissue," we determine that Cartessa's Petition fails to support a reasonable likelihood that claim 11 is unpatentable as obvious over Morris and Pearson. And because Cartessa's challenge of dependent claims 12–19 suffers the same deficiencies, we likewise determine that Cartessa falls short in demonstrating a reasonable likelihood that those dependent claims are unpatentable as obvious over Morris and Pearson.

*D. Independent Claim 1 (and its dependents)*

Like apparatus claim 11, method claim 1 recites limitations directed to treating "dermatological tissue." Ex. 1001, 15:48–57. Cartessa's challenge of claim 1, as well as dependent claims 2–7, 9, and 10, relies on the same challenge and arguments as asserted against claims 11–19. *See* Pet. 44–45 (asserting that "[i]ndependent claim 1 is similar to claim 11" and "[t]hus, for brevity, Petitioner refers back to the analysis of claim 11 for the overlapping limitations"). For the same reasons discussed above with respect to claims

11–19, we determine that Cartessa fails to demonstrate a reasonable likelihood that claims 1–7, 9, and 10 are unpatentable as obvious over Morris and Pearson.

## III. CONCLUSION

For the above reasons, we decline to institute *inter partes* review of any of the challenged claims of the '774 patent.

## IV. ORDER

Accordingly, it is:

ORDERED that the Petition is *denied*.

For PETITIONER:

Richard LaCava
Taniel Anderson
Jasjit S. Vidwan
ARENT FOX LLP
richard.lacava@arentfox.com
taniel.anderson@arentfox.com
jasjit.vidwan@arentfox.com

For PATENT OWNER:

Dr. Gregory J. Gonsalves
Yeasun Yoon
CAPITOL IP LAW GROUP, PLLC
gonsalves@capitoliplaw.com
yoon@capitoliplaw.com

PTO/SB/44 (09-07)
Approved for use through 03/31/2023. OMB 0651-0033
U.S. Patent and Trademark Office; U.S. DEPARTMENT OF COMMERCE
Under the Paperwork Reduction Act of 1995, no persons are required to respond to a collection of information unless it displays a valid OMB control number.
(Also Form PTO-1050)

# UNITED STATES PATENT AND TRADEMARK OFFICE
# CERTIFICATE OF CORRECTION



PATENT NO. : 9,775,774

APPLICATION NO.: 15/096,686

ISSUE DATE : 10/03/2017

INVENTOR(S) : Jongju Na

It is certified that an error appears or errors appear in the above-identified patent and that said Letters Patent is hereby corrected as shown below:

On the cover page of United States Patent No. 9,775,774, there should be:
legend of --Related U.S. Application Data--;
item (63) reciting --Continuation of application No. 13/825,083, filed as application No. PCT/KR2012/001335 on Feb. 22, 2012, now Pat. No. 9,320,536, which is a continuation of application No. 13/060,274, filed as application No. PCT/US2008/074131 on Aug. 22, 2008, now Pat. No. 8,979,912--; and
item (60) reciting --Provisional application No. 61/449,080, filed on Mar. 3, 2011--.

MAILING ADDRESS OF SENDER (Please do not use Customer Number below):

This collection of information is required by 37 CFR 1.322, 1.323, and 1.324. The information is required to obtain or retain a benefit by the public which is to file (and by the USPTO to process) an application. Confidentiality is governed by 35 U.S.C. 122 and 37 CFR 1.14. This collection is estimated to take 1.0 hour to complete, including gathering, preparing, and submitting the completed application form to the USPTO. Time will vary depending upon the individual case. Any comments on the amount of time you require to complete this form and/or suggestions for reducing this burden, should be sent to the Chief Information Officer, U.S. Patent and Trademark Office, U.S. Department of Commerce, P.O. Box 1450, Alexandria, VA 22313-1450. DO NOT SEND FEES OR COMPLETED FORMS TO THIS ADDRESS. **SEND TO: Attention Certificate of Corrections Branch, Commissioner for Patents, P.O. Box 1450, Alexandria, VA 22313-1450.**

*If you need assistance in completing the form, call 1-800-PTO-9199 and select option 2.*

# Privacy Act Statement

The **Privacy Act of 1974 (P.L. 93-579)** requires that you be given certain information in connection with your submission of the attached form related to a patent application or patent. Accordingly, pursuant to the requirements of the Act, please be advised that: (1) the general authority for the collection of this information is 35 U.S.C. 2(b)(2); (2) furnishing of the information solicited is voluntary; and (3) the principal purpose for which the information is used by the U.S. Patent and Trademark Office is to process and/or examine your submission related to a patent application or patent. If you do not furnish the requested information, the U.S. Patent and Trademark Office may not be able to process and/or examine your submission, which may result in termination of proceedings or abandonment of the application or expiration of the patent.

The information provided by you in this form will be subject to the following routine uses:

1. The information on this form will be treated confidentially to the extent allowed under the Freedom of Information Act (5 U.S.C. 552) and the Privacy Act (5 U.S.C 552a). Records from this system of records may be disclosed to the Department of Justice to determine whether disclosure of these records is required by the Freedom of Information Act.
2. A record from this system of records may be disclosed, as a routine use, in the course of presenting evidence to a court, magistrate, or administrative tribunal, including disclosures to opposing counsel in the course of settlement negotiations.
3. A record in this system of records may be disclosed, as a routine use, to a Member of Congress submitting a request involving an individual, to whom the record pertains, when the individual has requested assistance from the Member with respect to the subject matter of the record.
4. A record in this system of records may be disclosed, as a routine use, to a contractor of the Agency having need for the information in order to perform a contract. Recipients of information shall be required to comply with the requirements of the Privacy Act of 1974, as amended, pursuant to 5 U.S.C. 552a(m).
5. A record related to an International Application filed under the Patent Cooperation Treaty in this system of records may be disclosed, as a routine use, to the International Bureau of the World Intellectual Property Organization, pursuant to the Patent Cooperation Treaty.
6. A record in this system of records may be disclosed, as a routine use, to another federal agency for purposes of National Security review (35 U.S.C. 181) and for review pursuant to the Atomic Energy Act (42 U.S.C. 218(c)).
7. A record from this system of records may be disclosed, as a routine use, to the Administrator, General Services, or his/her designee, during an inspection of records conducted by GSA as part of that agency's responsibility to recommend improvements in records management practices and programs, under authority of 44 U.S.C. 2904 and 2906. Such disclosure shall be made in accordance with the GSA regulations governing inspection of records for this purpose, and any other relevant (*i.e.*, GSA or Commerce) directive. Such disclosure shall not be used to make determinations about individuals.
8. A record from this system of records may be disclosed, as a routine use, to the public after either publication of the application pursuant to 35 U.S.C. 122(b) or issuance of a patent pursuant to 35 U.S.C. 151. Further, a record may be disclosed, subject to the limitations of 37 CFR 1.14, as a routine use, to the public if the record was filed in an application which became abandoned or in which the proceedings were terminated and which application is referenced by either a published application, an application open to public inspection or an issued patent.
9. A record from this system of records may be disclosed, as a routine use, to a Federal, State, or local law enforcement agency, if the USPTO becomes aware of a violation or potential violation of law or regulation.

UNITED STATES PATENT AND TRADEMARK OFFICE

UNITED STATES DEPARTMENT OF COMMERCE
United States Patent and Trademark Office
Address: COMMISSIONER FOR PATENTS
P.O. Box 1450
Alexandria, Virginia 22313-1450
www.uspto.gov

| APPLICATION NUMBER | FILING or 371(c) DATE | GRP ART UNIT | FIL FEE REC'D | ATTY.DOCKET.NO | TOT CLAIMS | IND CLAIMS |
|---|---|---|---|---|---|---|
| 15/096,686 | 04/12/2016 | 3769 | 0.00 | NA001KR_US2 | 20 | 2 |

**CONFIRMATION NO. 2620**

26338
MERLE W. RICHMAN, III
P.O. BOX 3333
LA JOLLA, CA 92038

**FILING RECEIPT**

OC000000082491835

Date Mailed: 04/28/2016

Receipt is acknowledged of this non-provisional patent application. The application will be taken up for examination in due course. Applicant will be notified as to the results of the examination. Any correspondence concerning the application must include the following identification information: the U.S. APPLICATION NUMBER, FILING DATE, NAME OF APPLICANT, and TITLE OF INVENTION. Fees transmitted by check or draft are subject to collection. Please verify the accuracy of the data presented on this receipt. **If an error is noted on this Filing Receipt, please submit a written request for a Filing Receipt Correction. Please provide a copy of this Filing Receipt with the changes noted thereon. If you received a "Notice to File Missing Parts" for this application, please submit any corrections to this Filing Receipt with your reply to the Notice. When the USPTO processes the reply to the Notice, the USPTO will generate another Filing Receipt incorporating the requested corrections**

**Inventor(s)**

Jongju Na, Songpa-Gu, KOREA, REPUBLIC OF;

**Applicant(s)**

Jongju Na, Songpa-Gu, KOREA, REPUBLIC OF;

**Power of Attorney:** None

**Domestic Priority data as claimed by applicant**

This application is a CON of 13/825,083 01/20/2014 PAT 9320536 *
which is a 371 of PCT/KR2012/001335 02/22/2012
which claims benefit of 61/449,080 03/03/2011
and is a CON of 13/060,274 03/30/2011 PAT 8979912 *
which is a 371 of PCT/US08/74131 08/22/2008
(*)Data provided by applicant is not consistent with PTO records.

**Foreign Applications** (You may be eligible to benefit from the **Patent Prosecution Highway** program at the USPTO. Please see http://www.uspto.gov for more information.)
REPUBLIC OF KOREA 10-2008-0076993 08/06/2008

**Permission to Access Application via Priority Document Exchange:** Yes

**Permission to Access Search Results:** No

Applicant may provide or rescind an authorization for access using Form PTO/SB/39 or Form PTO/SB/69 as appropriate.

Request to Retrieve - This application either claims priority to one or more applications filed in an intellectual property Office that participates in the Priority Document Exchange (PDX) program or contains a proper **Request to Retrieve Electronic Priority Application(s)** (PTO/SB/38 or its equivalent). Consequently, the USPTO will attempt to electronically retrieve these priority documents.

**If Required, Foreign Filing License Granted:** 04/27/2016
The country code and number of your priority application, to be used for filing abroad under the Paris Convention, is **US 15/096,686**
**Projected Publication Date:** To Be Determined - pending completion of Missing Parts
**Non-Publication Request:** No
**Early Publication Request:** No
**** SMALL ENTITY ****
**Title**

Method, system, and apparatus for dermatological treatment

**Preliminary Class**

606

**Statement under 37 CFR 1.55 or 1.78 for AIA (First Inventor to File) Transition Applications:** Yes

## PROTECTING YOUR INVENTION OUTSIDE THE UNITED STATES

Since the rights granted by a U.S. patent extend only throughout the territory of the United States and have no effect in a foreign country, an inventor who wishes patent protection in another country must apply for a patent in a specific country or in regional patent offices. Applicants may wish to consider the filing of an international application under the Patent Cooperation Treaty (PCT). An international (PCT) application generally has the same effect as a regular national patent application in each PCT-member country. The PCT process **simplifies** the filing of patent applications on the same invention in member countries, but **does not result** in a grant of "an international patent" and does not eliminate the need of applicants to file additional documents and fees in countries where patent protection is desired.

Almost every country has its own patent law, and a person desiring a patent in a particular country must make an application for patent in that country in accordance with its particular laws. Since the laws of many countries differ in various respects from the patent law of the United States, applicants are advised to seek guidance from specific foreign countries to ensure that patent rights are not lost prematurely.

Applicants also are advised that in the case of inventions made in the United States, the Director of the USPTO must issue a license before applicants can apply for a patent in a foreign country. The filing of a U.S. patent application serves as a request for a foreign filing license. The application's filing receipt contains further information and guidance as to the status of applicant's license for foreign filing.

Applicants may wish to consult the USPTO booklet, "General Information Concerning Patents" (specifically, the section entitled "Treaties and Foreign Patents") for more information on timeframes and deadlines for filing foreign patent applications. The guide is available either by contacting the USPTO Contact Center at 800-786-9199, or it can be viewed on the USPTO website at http://www.uspto.gov/web/offices/pac/doc/general/index.html.

For information on preventing theft of your intellectual property (patents, trademarks and copyrights), you may wish to consult the U.S. Government website, http://www.stopfakes.gov. Part of a Department of Commerce initiative, this website includes self-help "toolkits" giving innovators guidance on how to protect intellectual property in specific

countries such as China, Korea and Mexico. For questions regarding patent enforcement issues, applicants may call the U.S. Government hotline at 1-866-999-HALT (1-866-999-4258).

## LICENSE FOR FOREIGN FILING UNDER

## Title 35, United States Code, Section 184

## Title 37, Code of Federal Regulations, 5.11 & 5.15

**GRANTED**

The applicant has been granted a license under 35 U.S.C. 184, if the phrase "IF REQUIRED, FOREIGN FILING LICENSE GRANTED" followed by a date appears on this form. Such licenses are issued in all applications where the conditions for issuance of a license have been met, regardless of whether or not a license may be required as set forth in 37 CFR 5.15. The scope and limitations of this license are set forth in 37 CFR 5.15(a) unless an earlier license has been issued under 37 CFR 5.15(b). The license is subject to revocation upon written notification. The date indicated is the effective date of the license, unless an earlier license of similar scope has been granted under 37 CFR 5.13 or 5.14.

This license is to be retained by the licensee and may be used at any time on or after the effective date thereof unless it is revoked. This license is automatically transferred to any related applications(s) filed under 37 CFR 1.53(d). This license is not retroactive.

The grant of a license does not in any way lessen the responsibility of a licensee for the security of the subject matter as imposed by any Government contract or the provisions of existing laws relating to espionage and the national security or the export of technical data. Licensees should apprise themselves of current regulations especially with respect to certain countries, of other agencies, particularly the Office of Defense Trade Controls, Department of State (with respect to Arms, Munitions and Implements of War (22 CFR 121-128)); the Bureau of Industry and Security, Department of Commerce (15 CFR parts 730-774); the Office of Foreign AssetsControl, Department of Treasury (31 CFR Parts 500+) and the Department of Energy.

**NOT GRANTED**

No license under 35 U.S.C. 184 has been granted at this time, if the phrase "IF REQUIRED, FOREIGN FILING LICENSE GRANTED" DOES NOT appear on this form. Applicant may still petition for a license under 37 CFR 5.12, if a license is desired before the expiration of 6 months from the filing date of the application. If 6 months has lapsed from the filing date of this application and the licensee has not received any indication of a secrecy order under 35 U.S.C. 181, the licensee may foreign file the application pursuant to 37 CFR 5.15(b).

---

## *SelectUSA*

The United States represents the largest, most dynamic marketplace in the world and is an unparalleled location for business investment, innovation, and commercialization of new technologies. The U.S. offers tremendous resources and advantages for those who invest and manufacture goods here. Through SelectUSA, our nation works to promote and facilitate business investment. SelectUSA provides information assistance to the international investor community; serves as an ombudsman for existing and potential investors; advocates on behalf of U.S. cities, states, and regions competing for global investment; and counsels U.S. economic development organizations on investment attraction best practices. To learn more about why the United States is the best country in the world to develop

technology, manufacture products, deliver services, and grow your business, visit http://www.SelectUSA.gov or call +1-202-482-6800.

UNITED STATES PATENT AND TRADEMARK OFFICE

UNITED STATES DEPARTMENT OF COMMERCE
United States Patent and Trademark Office
Address: COMMISSIONER FOR PATENTS
P.O. Box 1450
Alexandria, Virginia 22313-1450
www.uspto.gov

| APPLICATION NUMBER | FILING or 371(c) DATE | GRP ART UNIT | FIL FEE REC'D | ATTY.DOCKET.NO | TOT CLAIMS | IND CLAIMS |
|---|---|---|---|---|---|---|
| 15/096,686 | 04/12/2016 | 3769 | 800 | NA001KR_US2 | 20 | 2 |

**CONFIRMATION NO. 2620**

**UPDATED FILING RECEIPT**

26338
MERLE W. RICHMAN, III
P.O. BOX 3333
LA JOLLA, CA 92038

OC000000085621982

Date Mailed: 09/07/2016

Receipt is acknowledged of this non-provisional patent application. The application will be taken up for examination in due course. Applicant will be notified as to the results of the examination. Any correspondence concerning the application must include the following identification information: the U.S. APPLICATION NUMBER, FILING DATE, NAME OF APPLICANT, and TITLE OF INVENTION. Fees transmitted by check or draft are subject to collection. Please verify the accuracy of the data presented on this receipt. **If an error is noted on this Filing Receipt, please submit a written request for a Filing Receipt Correction. Please provide a copy of this Filing Receipt with the changes noted thereon. If you received a "Notice to File Missing Parts" for this application, please submit any corrections to this Filing Receipt with your reply to the Notice. When the USPTO processes the reply to the Notice, the USPTO will generate another Filing Receipt incorporating the requested corrections**

**Inventor(s)**

Jongju Na, Songpa-Gu, KOREA, REPUBLIC OF;

**Applicant(s)**

Jongju Na, Songpa-Gu, KOREA, REPUBLIC OF;

**Power of Attorney:** None

**Domestic Priority data as claimed by applicant**

This application is a CON of 13/825,083 01/20/2014 PAT 9320536 *
which is a 371 of PCT/KR2012/001335 02/22/2012
which claims benefit of 61/449,080 03/03/2011
and is a CON of 13/060,274 03/30/2011 PAT 8979912 *
which is a 371 of PCT/US08/74131 08/22/2008
(*)Data provided by applicant is not consistent with PTO records.

**Foreign Applications** (You may be eligible to benefit from the **Patent Prosecution Highway** program at the USPTO. Please see http://www.uspto.gov for more information.)
REPUBLIC OF KOREA 10-2008-0076993 08/06/2008

**Permission to Access Application via Priority Document Exchange:** Yes

**Permission to Access Search Results:** No

Applicant may provide or rescind an authorization for access using Form PTO/SB/39 or Form PTO/SB/69 as appropriate.

Request to Retrieve - This application either claims priority to one or more applications filed in an intellectual property Office that participates in the Priority Document Exchange (PDX) program or contains a proper **Request to Retrieve Electronic Priority Application(s)** (PTO/SB/38 or its equivalent). Consequently, the USPTO will attempt to electronically retrieve these priority documents.

**If Required, Foreign Filing License Granted:** 04/27/2016
The country code and number of your priority application, to be used for filing abroad under the Paris Convention, is **US 15/096,686**
**Projected Publication Date:** 12/15/2016
**Non-Publication Request:** No
**Early Publication Request:** No
**** SMALL ENTITY ****
**Title**

Method, system, and apparatus for dermatological treatment

**Preliminary Class**

606

**Statement under 37 CFR 1.55 or 1.78 for AIA (First Inventor to File) Transition Applications:** Yes

## PROTECTING YOUR INVENTION OUTSIDE THE UNITED STATES

Since the rights granted by a U.S. patent extend only throughout the territory of the United States and have no effect in a foreign country, an inventor who wishes patent protection in another country must apply for a patent in a specific country or in regional patent offices. Applicants may wish to consider the filing of an international application under the Patent Cooperation Treaty (PCT). An international (PCT) application generally has the same effect as a regular national patent application in each PCT-member country. The PCT process **simplifies** the filing of patent applications on the same invention in member countries, but **does not result** in a grant of "an international patent" and does not eliminate the need of applicants to file additional documents and fees in countries where patent protection is desired.

Almost every country has its own patent law, and a person desiring a patent in a particular country must make an application for patent in that country in accordance with its particular laws. Since the laws of many countries differ in various respects from the patent law of the United States, applicants are advised to seek guidance from specific foreign countries to ensure that patent rights are not lost prematurely.

Applicants also are advised that in the case of inventions made in the United States, the Director of the USPTO must issue a license before applicants can apply for a patent in a foreign country. The filing of a U.S. patent application serves as a request for a foreign filing license. The application's filing receipt contains further information and guidance as to the status of applicant's license for foreign filing.

Applicants may wish to consult the USPTO booklet, "General Information Concerning Patents" (specifically, the section entitled "Treaties and Foreign Patents") for more information on timeframes and deadlines for filing foreign patent applications. The guide is available either by contacting the USPTO Contact Center at 800-786-9199, or it can be viewed on the USPTO website at http://www.uspto.gov/web/offices/pac/doc/general/index.html.

For information on preventing theft of your intellectual property (patents, trademarks and copyrights), you may wish to consult the U.S. Government website, http://www.stopfakes.gov. Part of a Department of Commerce initiative, this website includes self-help "toolkits" giving innovators guidance on how to protect intellectual property in specific

countries such as China, Korea and Mexico. For questions regarding patent enforcement issues, applicants may call the U.S. Government hotline at 1-866-999-HALT (1-866-999-4258).

## LICENSE FOR FOREIGN FILING UNDER

## Title 35, United States Code, Section 184

## Title 37, Code of Federal Regulations, 5.11 & 5.15

**GRANTED**

The applicant has been granted a license under 35 U.S.C. 184, if the phrase "IF REQUIRED, FOREIGN FILING LICENSE GRANTED" followed by a date appears on this form. Such licenses are issued in all applications where the conditions for issuance of a license have been met, regardless of whether or not a license may be required as set forth in 37 CFR 5.15. The scope and limitations of this license are set forth in 37 CFR 5.15(a) unless an earlier license has been issued under 37 CFR 5.15(b). The license is subject to revocation upon written notification. The date indicated is the effective date of the license, unless an earlier license of similar scope has been granted under 37 CFR 5.13 or 5.14.

This license is to be retained by the licensee and may be used at any time on or after the effective date thereof unless it is revoked. This license is automatically transferred to any related applications(s) filed under 37 CFR 1.53(d). This license is not retroactive.

The grant of a license does not in any way lessen the responsibility of a licensee for the security of the subject matter as imposed by any Government contract or the provisions of existing laws relating to espionage and the national security or the export of technical data. Licensees should apprise themselves of current regulations especially with respect to certain countries, of other agencies, particularly the Office of Defense Trade Controls, Department of State (with respect to Arms, Munitions and Implements of War (22 CFR 121-128)); the Bureau of Industry and Security, Department of Commerce (15 CFR parts 730-774); the Office of Foreign AssetsControl, Department of Treasury (31 CFR Parts 500+) and the Department of Energy.

**NOT GRANTED**

No license under 35 U.S.C. 184 has been granted at this time, if the phrase "IF REQUIRED, FOREIGN FILING LICENSE GRANTED" DOES NOT appear on this form. Applicant may still petition for a license under 37 CFR 5.12, if a license is desired before the expiration of 6 months from the filing date of the application. If 6 months has lapsed from the filing date of this application and the licensee has not received any indication of a secrecy order under 35 U.S.C. 181, the licensee may foreign file the application pursuant to 37 CFR 5.15(b).

---

## *SelectUSA*

The United States represents the largest, most dynamic marketplace in the world and is an unparalleled location for business investment, innovation, and commercialization of new technologies. The U.S. offers tremendous resources and advantages for those who invest and manufacture goods here. Through SelectUSA, our nation works to promote and facilitate business investment. SelectUSA provides information assistance to the international investor community; serves as an ombudsman for existing and potential investors; advocates on behalf of U.S. cities, states, and regions competing for global investment; and counsels U.S. economic development organizations on investment attraction best practices. To learn more about why the United States is the best country in the world to develop

technology, manufacture products, deliver services, and grow your business, visit http://www.SelectUSA.gov or call +1-202-482-6800.

UNITED STATES PATENT AND TRADEMARK OFFICE

UNITED STATES DEPARTMENT OF COMMERCE
United States Patent and Trademark Office
Address: COMMISSIONER FOR PATENTS
P.O. Box 1450
Alexandria, Virginia 22313-1450
www.uspto.gov

| APPLICATION NO. | FILING DATE | FIRST NAMED INVENTOR | ATTORNEY DOCKET NO. | CONFIRMATION NO. |
|---|---|---|---|---|
| 15/096,686 | 04/12/2016 | Jongju Na | NA001KR_US2 | 2620 |

26338 7590 11/30/2016

MERLE W. RICHMAN, III
P.O. BOX 3333
LA JOLLA, CA 92038

| EXAMINER |
|---|
| COMSTOCK, DAVID C |

| ART UNIT | PAPER NUMBER |
|---|---|
| 3733 | |

| MAIL DATE | DELIVERY MODE |
|---|---|
| 11/30/2016 | PAPER |

**Please find below and/or attached an Office communication concerning this application or proceeding.**

The time period for reply, if any, is set in the attached communication.

| Office Action Summary | Application No. 15/096,686 | Applicant(s) NA, JONGJU | |
|---|---|---|---|
| | Examiner DAVID C. COMSTOCK | Art Unit 3733 | AIA (First Inventor to File) Status Yes |

*-- The MAILING DATE of this communication appears on the cover sheet with the correspondence address --*

**Period for Reply**

A SHORTENED STATUTORY PERIOD FOR REPLY IS SET TO EXPIRE *3* MONTHS FROM THE MAILING DATE OF THIS COMMUNICATION.

- Extensions of time may be available under the provisions of 37 CFR 1.136(a). In no event, however, may a reply be timely filed after SIX (6) MONTHS from the mailing date of this communication.
- If NO period for reply is specified above, the maximum statutory period will apply and will expire SIX (6) MONTHS from the mailing date of this communication.
- Failure to reply within the set or extended period for reply will, by statute, cause the application to become ABANDONED (35 U.S.C. § 133). Any reply received by the Office later than three months after the mailing date of this communication, even if timely filed, may reduce any earned patent term adjustment. See 37 CFR 1.704(b).

**Status**

1)☒ Responsive to communication(s) filed on *12 April 2016*.

☐ A declaration(s)/affidavit(s) under **37 CFR 1.130(b)** was/were filed on _____.

2a)☐ This action is **FINAL**. 2b)☒ This action is non-final.

3)☐ An election was made by the applicant in response to a restriction requirement set forth during the interview on _____; the restriction requirement and election have been incorporated into this action.

4)☐ Since this application is in condition for allowance except for formal matters, prosecution as to the merits is closed in accordance with the practice under *Ex parte Quayle*, 1935 C.D. 11, 453 O.G. 213.

**Disposition of Claims***

5)☒ Claim(s) *21-40* is/are pending in the application.

5a) Of the above claim(s) _____ is/are withdrawn from consideration.

6)☐ Claim(s) _____ is/are allowed.

7)☒ Claim(s) *21-40* is/are rejected.

8)☐ Claim(s) _____ is/are objected to.

9)☐ Claim(s) _____ are subject to restriction and/or election requirement.

* If any claims have been determined allowable, you may be eligible to benefit from the **Patent Prosecution Highway** program at a participating intellectual property office for the corresponding application. For more information, please see http://www.uspto.gov/patents/init_events/pph/index.jsp or send an inquiry to PPHfeedback@uspto.gov.

**Application Papers**

10)☐ The specification is objected to by the Examiner.

11)☒ The drawing(s) filed on *12 April 2016* is/are: a)☒ accepted or b)☐ objected to by the Examiner.

Applicant may not request that any objection to the drawing(s) be held in abeyance. See 37 CFR 1.85(a).

Replacement drawing sheet(s) including the correction is required if the drawing(s) is objected to. See 37 CFR 1.121(d).

**Priority under 35 U.S.C. § 119**

12)☒ Acknowledgment is made of a claim for foreign priority under 35 U.S.C. § 119(a)-(d) or (f).

**Certified copies:**

a)☒ All b)☐ Some** c)☐ None of the:

1.☐ Certified copies of the priority documents have been received.

2.☒ Certified copies of the priority documents have been received in Application No. 13825083.

3.☐ Copies of the certified copies of the priority documents have been received in this National Stage application from the International Bureau (PCT Rule 17.2(a)).

** See the attached detailed Office action for a list of the certified copies not received.

**Attachment(s)**

1) ☒ Notice of References Cited (PTO-892)

2) ☐ Information Disclosure Statement(s) (PTO/SB/08a and/or PTO/SB/08b) Paper No(s)/Mail Date _____.

3) ☐ Interview Summary (PTO-413) Paper No(s)/Mail Date. _____ .

4) ☐ Other: _____.

## DETAILED ACTION

### *Notice of Pre-AIA or AIA Status*

The present application, filed on or after March 16, 2013, is being examined under the first inventor to file provisions of the AIA.

### *Double Patenting*

The nonstatutory double patenting rejection is based on a judicially created doctrine grounded in public policy (a policy reflected in the statute) so as to prevent the unjustified or improper timewise extension of the "right to exclude" granted by a patent and to prevent possible harassment by multiple assignees. A nonstatutory double patenting rejection is appropriate where the conflicting claims are not identical, but at least one examined application claim is not patentably distinct from the reference claim(s) because the examined application claim is either anticipated by, or would have been obvious over, the reference claim(s). See, e.g., *In re Berg*, 140 F.3d 1428, 46 USPQ2d 1226 (Fed. Cir. 1998); *In re Goodman*, 11 F.3d 1046, 29 USPQ2d 2010 (Fed. Cir. 1993); *In re Longi*, 759 F.2d 887, 225 USPQ 645 (Fed. Cir. 1985); *In re Van Ornum*, 686 F.2d 937, 214 USPQ 761 (CCPA 1982); *In re Vogel*, 422 F.2d 438, 164 USPQ 619 (CCPA 1970); *In re Thorington*, 418 F.2d 528, 163 USPQ 644 (CCPA 1969).

A timely filed terminal disclaimer in compliance with 37 CFR 1.321(c) or 1.321(d) may be used to overcome an actual or provisional rejection based on nonstatutory double patenting provided the reference application or patent either is shown to be commonly owned with the examined application, or claims an invention made as a result of activities undertaken within the scope of a joint research agreement. See MPEP § 717.02 for applications subject to examination under the first inventor to file provisions of the AIA as explained in MPEP § 2159. See MPEP §§ 706.02(l)(1) - 706.02(l)(3) for applications not subject to examination under the first inventor to file provisions of the AIA. A terminal disclaimer must be signed in compliance with 37 CFR 1.321(b).

The USPTO Internet website contains terminal disclaimer forms which may be used. Please visit www.uspto.gov/patent/patents-forms. The filing date of the application in which the form is filed determines what form (e.g., PTO/SB/25, PTO/SB/26, PTO/AIA/25, or PTO/AIA/26) should be used. A web-based eTerminal Disclaimer may be filled out completely online using web-screens. An eTerminal

Disclaimer that meets all requirements is auto-processed and approved immediately upon submission. For more information about eTerminal Disclaimers, refer to www.uspto.gov/patents/process/file/efs/guidance/eTD-info-I.jsp.

Claims 21-40 are rejected on the ground of nonstatutory double patenting as being unpatentable over claims 1-20 of U.S. Patent No. 9,320,536. Although the claims at issue are not identical, they are not patentably distinct from each other because the differences amount to minor changes in the phraseology and arrangement of claim limitations. Both the noted issued patent and the present claims are directed to substantially the same invention of a dermatological treatment system utilizing deployable needles, an energized motor, electrical signals, a signal generator, and method of using the same to deliver energy to the needles and dermatological tissue.

Any inquiry concerning this communication or earlier communications from the examiner should be directed to David Comstock whose telephone number is (571) 272-4710. The examiner can normally be reached Monday-Friday, 9 a.m. - 6 p.m.

If attempts to reach the examiner by telephone are unsuccessful, ***please contact*** **the examiner's supervisor, SPE, *at* (571) 272-4760**. The fax phone number for the organization where this application or proceeding is assigned is 571-273-8300.

Information regarding the status of an application may be obtained from the Patent Application Information Retrieval (PAIR) system. Status information for published applications may be obtained from either Private PAIR or Public PAIR. Status information for unpublished applications is available through Private PAIR only. For more information about the PAIR system, see http://pair-direct.uspto.gov. Should you have questions on access to the Private PAIR system, contact the Electronic Business Center (EBC) at 866-217-9197 (toll-free). If you would like assistance from a USPTO Customer Service Representative or access to the automated information system, call 800-786-9199 (IN USA OR CANADA) or 571-272-1000.

/DAVID C COMSTOCK/
Examiner, Art Unit 3733
/PEDRO PHILOGENE/

Primary Examiner, Art Unit 3733

UNITED STATES PATENT AND TRADEMARK OFFICE

UNITED STATES DEPARTMENT OF COMMERCE
United States Patent and Trademark Office
Address: COMMISSIONER FOR PATENTS
P.O. Box 1450
Alexandria, Virginia 22313-1450
www.uspto.gov

# NOTICE OF ALLOWANCE AND FEE(S) DUE

26338 7590 05/19/2017

MERLE W. RICHMAN, III
P.O. BOX 3333
LA JOLLA, CA 92038

| EXAMINER |
|---|
| COMSTOCK, DAVID C |

| ART UNIT | PAPER NUMBER |
|---|---|
| 3733 | |

DATE MAILED: 05/19/2017

| APPLICATION NO. | FILING DATE | FIRST NAMED INVENTOR | ATTORNEY DOCKET NO. | CONFIRMATION NO. |
|---|---|---|---|---|
| 15/096,686 | 04/12/2016 | Jongju Na | NA001KR_US2 | 2620 |

TITLE OF INVENTION: METHOD, SYSTEM, AND APPARATUS FOR DERMATOLOGICAL TREATMENT

| APPLN. TYPE | ENTITY STATUS | ISSUE FEE DUE | PUBLICATION FEE DUE | PREV. PAID ISSUE FEE | TOTAL FEE(S) DUE | DATE DUE |
|---|---|---|---|---|---|---|
| nonprovisional | SMALL | $480 | $0 | $0 | $480 | 08/21/2017 |

**THE APPLICATION IDENTIFIED ABOVE HAS BEEN EXAMINED AND IS ALLOWED FOR ISSUANCE AS A PATENT. PROSECUTION ON THE MERITS IS CLOSED. THIS NOTICE OF ALLOWANCE IS NOT A GRANT OF PATENT RIGHTS. THIS APPLICATION IS SUBJECT TO WITHDRAWAL FROM ISSUE AT THE INITIATIVE OF THE OFFICE OR UPON PETITION BY THE APPLICANT. SEE 37 CFR 1.313 AND MPEP 1308.**

**THE ISSUE FEE AND PUBLICATION FEE (IF REQUIRED) MUST BE PAID WITHIN THREE MONTHS FROM THE MAILING DATE OF THIS NOTICE OR THIS APPLICATION SHALL BE REGARDED AS ABANDONED. THIS STATUTORY PERIOD CANNOT BE EXTENDED. SEE 35 U.S.C. 151. THE ISSUE FEE DUE INDICATED ABOVE DOES NOT REFLECT A CREDIT FOR ANY PREVIOUSLY PAID ISSUE FEE IN THIS APPLICATION. IF AN ISSUE FEE HAS PREVIOUSLY BEEN PAID IN THIS APPLICATION (AS SHOWN ABOVE), THE RETURN OF PART B OF THIS FORM WILL BE CONSIDERED A REQUEST TO REAPPLY THE PREVIOUSLY PAID ISSUE FEE TOWARD THE ISSUE FEE NOW DUE.**

**HOW TO REPLY TO THIS NOTICE:**

I. Review the ENTITY STATUS shown above. If the ENTITY STATUS is shown as SMALL or MICRO, verify whether entitlement to that entity status still applies.

If the ENTITY STATUS is the same as shown above, pay the TOTAL FEE(S) DUE shown above.

If the ENTITY STATUS is changed from that shown above, on PART B - FEE(S) TRANSMITTAL, complete section number 5 titled "Change in Entity Status (from status indicated above)".

For purposes of this notice, small entity fees are 1/2 the amount of undiscounted fees, and micro entity fees are 1/2 the amount of small entity fees.

II. PART B - FEE(S) TRANSMITTAL, or its equivalent, must be completed and returned to the United States Patent and Trademark Office (USPTO) with your ISSUE FEE and PUBLICATION FEE (if required). If you are charging the fee(s) to your deposit account, section "4b" of Part B - Fee(s) Transmittal should be completed and an extra copy of the form should be submitted. If an equivalent of Part B is filed, a request to reapply a previously paid issue fee must be clearly made, and delays in processing may occur due to the difficulty in recognizing the paper as an equivalent of Part B.

III. All communications regarding this application must give the application number. Please direct all communications prior to issuance to Mail Stop ISSUE FEE unless advised to the contrary.

**IMPORTANT REMINDER: Utility patents issuing on applications filed on or after Dec. 12, 1980 may require payment of maintenance fees. It is patentee's responsibility to ensure timely payment of maintenance fees when due.**

# PART B - FEE(S) TRANSMITTAL

**Complete and send this form, together with applicable fee(s), to: Mail** **Mail Stop ISSUE FEE**
**Commissioner for Patents**
**P.O. Box 1450**
**Alexandria, Virginia 22313-1450**
**or Fax (571)-273-2885**

INSTRUCTIONS: This form should be used for transmitting the ISSUE FEE and PUBLICATION FEE (if required). Blocks 1 through 5 should be completed where appropriate. All further correspondence including the Patent, advance orders and notification of maintenance fees will be mailed to the current correspondence address as indicated unless corrected below or directed otherwise in Block 1, by (a) specifying a new correspondence address; and/or (b) indicating a separate "FEE ADDRESS" for maintenance fee notifications.

CURRENT CORRESPONDENCE ADDRESS (Note: Use Block 1 for any change of address)

26338 7590 05/19/2017
MERLE W. RICHMAN, III
P.O. BOX 3333
LA JOLLA, CA 92038

Note: A certificate of mailing can only be used for domestic mailings of the Fee(s) Transmittal. This certificate cannot be used for any other accompanying papers. Each additional paper, such as an assignment or formal drawing, must have its own certificate of mailing or transmission.

**Certificate of Mailing or Transmission**
I hereby certify that this Fee(s) Transmittal is being deposited with the United States Postal Service with sufficient postage for first class mail in an envelope addressed to the Mail Stop ISSUE FEE address above, or being facsimile transmitted to the USPTO (571) 273-2885, on the date indicated below.

| |
|---|
| (Depositor's name) |
| (Signature) |
| (Date) |

| APPLICATION NO. | FILING DATE | FIRST NAMED INVENTOR | ATTORNEY DOCKET NO. | CONFIRMATION NO. |
|---|---|---|---|---|
| 15/096,686 | 04/12/2016 | Jongju Na | NA001KR_US2 | 2620 |

TITLE OF INVENTION: METHOD, SYSTEM, AND APPARATUS FOR DERMATOLOGICAL TREATMENT

| APPLN. TYPE | ENTITY STATUS | ISSUE FEE DUE | PUBLICATION FEE DUE | PREV. PAID ISSUE FEE | TOTAL FEE(S) DUE | DATE DUE |
|---|---|---|---|---|---|---|
| nonprovisional | SMALL | $480 | $0 | $0 | $480 | 08/21/2017 |

| EXAMINER | ART UNIT | CLASS-SUBCLASS |
|---|---|---|
| COMSTOCK, DAVID C | 3733 | 600-249000 |

1. Change of correspondence address or indication of "Fee Address" (37 CFR 1.363).
- ❑ Change of correspondence address (or Change of Correspondence Address form PTO/SB/122) attached.
- ❑ "Fee Address" indication (or "Fee Address" Indication form PTO/SB/47; Rev 03-02 or more recent) attached. **Use of a Customer Number is required.**

2. For printing on the patent front page, list
(1) The names of up to 3 registered patent attorneys or agents OR, alternatively,
(2) The name of a single firm (having as a member a registered attorney or agent) and the names of up to 2 registered patent attorneys or agents. If no name is listed, no name will be printed.
1 _____
2 _____
3 _____

3. ASSIGNEE NAME AND RESIDENCE DATA TO BE PRINTED ON THE PATENT (print or type)

PLEASE NOTE: Unless an assignee is identified below, no assignee data will appear on the patent. If an assignee is identified below, the document has been filed for recordation as set forth in 37 CFR 3.11. Completion of this form is NOT a substitute for filing an assignment.

(A) NAME OF ASSIGNEE (B) RESIDENCE: (CITY and STATE OR COUNTRY)

Please check the appropriate assignee category or categories (will not be printed on the patent) : ❑ Individual ❑ Corporation or other private group entity ❑ Government

4a. The following fee(s) are submitted:
- ❑ Issue Fee
- ❑ Publication Fee (No small entity discount permitted)
- ❑ Advance Order - # of Copies _____

4b. Payment of Fee(s): **(Please first reapply any previously paid issue fee shown above)**
- ❑ A check is enclosed.
- ❑ Payment by credit card. Form PTO-2038 is attached.
- ❑ The director is hereby authorized to charge the required fee(s), any deficiency, or credits any overpayment, to Deposit Account Number _____ (enclose an extra copy of this form).

5. **Change in Entity Status** (from status indicated above)
- ❑ Applicant certifying micro entity status. See 37 CFR 1.29
  NOTE: Absent a valid certification of Micro Entity Status (see forms PTO/SB/15A and 15B), issue fee payment in the micro entity amount will not be accepted at the risk of application abandonment.
- ❑ Applicant asserting small entity status. See 37 CFR 1.27
  NOTE: If the application was previously under micro entity status, checking this box will be taken to be a notification of loss of entitlement to micro entity status.
- ❑ Applicant changing to regular undiscounted fee status.
  NOTE: Checking this box will be taken to be a notification of loss of entitlement to small or micro entity status, as applicable.

NOTE: This form must be signed in accordance with 37 CFR 1.31 and 1.33. See 37 CFR 1.4 for signature requirements and certifications.

Authorized Signature _____ Date _____

Typed or printed name _____ Registration No. _____



PTOL-85 Part B (10-13) Approved for use through 10/31/2013. OMB 0651-0033 U.S. Patent and Trademark Office; U.S. DEPARTMENT OF COMMERCE

UNITED STATES PATENT AND TRADEMARK OFFICE

UNITED STATES DEPARTMENT OF COMMERCE
United States Patent and Trademark Office
Address: COMMISSIONER FOR PATENTS
P.O. Box 1450
Alexandria, Virginia 22313-1450
www.uspto.gov

| APPLICATION NO. | FILING DATE | FIRST NAMED INVENTOR | ATTORNEY DOCKET NO. | CONFIRMATION NO. |
|---|---|---|---|---|
| 15/096,686 | 04/12/2016 | Jongju Na | NA001KR_US2 | 2620 |

26338 7590 05/19/2017

MERLE W. RICHMAN, III
P.O. BOX 3333
LA JOLLA, CA 92038

| EXAMINER | |
|---|---|
| COMSTOCK, DAVID C | |
| **ART UNIT** | **PAPER NUMBER** |
| 3733 | |

DATE MAILED: 05/19/2017

**Determination of Patent Term Adjustment under 35 U.S.C. 154 (b)**
(Applications filed on or after May 29, 2000)

The Office has discontinued providing a Patent Term Adjustment (PTA) calculation with the Notice of Allowance.

Section 1(h)(2) of the AIA Technical Corrections Act amended 35 U.S.C. 154(b)(3)(B)(i) to eliminate the requirement that the Office provide a patent term adjustment determination with the notice of allowance. See Revisions to Patent Term Adjustment, 78 Fed. Reg. 19416, 19417 (Apr. 1, 2013). Therefore, the Office is no longer providing an initial patent term adjustment determination with the notice of allowance. The Office will continue to provide a patent term adjustment determination with the Issue Notification Letter that is mailed to applicant approximately three weeks prior to the issue date of the patent, and will include the patent term adjustment on the patent. Any request for reconsideration of the patent term adjustment determination (or reinstatement of patent term adjustment) should follow the process outlined in 37 CFR 1.705.

Any questions regarding the Patent Term Extension or Adjustment determination should be directed to the Office of Patent Legal Administration at (571)-272-7702. Questions relating to issue and publication fee payments should be directed to the Customer Service Center of the Office of Patent Publication at 1-(888)-786-0101 or (571)-272-4200.

## OMB Clearance and PRA Burden Statement for PTOL-85 Part B

The Paperwork Reduction Act (PRA) of 1995 requires Federal agencies to obtain Office of Management and Budget approval before requesting most types of information from the public. When OMB approves an agency request to collect information from the public, OMB (i) provides a valid OMB Control Number and expiration date for the agency to display on the instrument that will be used to collect the information and (ii) requires the agency to inform the public about the OMB Control Number's legal significance in accordance with 5 CFR 1320.5(b).

The information collected by PTOL-85 Part B is required by 37 CFR 1.311. The information is required to obtain or retain a benefit by the public which is to file (and by the USPTO to process) an application. Confidentiality is governed by 35 U.S.C. 122 and 37 CFR 1.14. This collection is estimated to take 12 minutes to complete, including gathering, preparing, and submitting the completed application form to the USPTO. Time will vary depending upon the individual case. Any comments on the amount of time you require to complete this form and/or suggestions for reducing this burden, should be sent to the Chief Information Officer, U.S. Patent and Trademark Office, U.S. Department of Commerce, P.O. Box 1450, Alexandria, Virginia 22313-1450. DO NOT SEND FEES OR COMPLETED FORMS TO THIS ADDRESS. SEND TO: Commissioner for Patents, P.O. Box 1450, Alexandria, Virginia 22313-1450. Under the Paperwork Reduction Act of 1995, no persons are required to respond to a collection of information unless it displays a valid OMB control number.

## Privacy Act Statement

**The Privacy Act of 1974 (P.L. 93-579)** requires that you be given certain information in connection with your submission of the attached form related to a patent application or patent. Accordingly, pursuant to the requirements of the Act, please be advised that: (1) the general authority for the collection of this information is 35 U.S.C. 2(b)(2); (2) furnishing of the information solicited is voluntary; and (3) the principal purpose for which the information is used by the U.S. Patent and Trademark Office is to process and/or examine your submission related to a patent application or patent. If you do not furnish the requested information, the U.S. Patent and Trademark Office may not be able to process and/or examine your submission, which may result in termination of proceedings or abandonment of the application or expiration of the patent.

The information provided by you in this form will be subject to the following routine uses:

1. The information on this form will be treated confidentially to the extent allowed under the Freedom of Information Act (5 U.S.C. 552) and the Privacy Act (5 U.S.C 552a). Records from this system of records may be disclosed to the Department of Justice to determine whether disclosure of these records is required by the Freedom of Information Act.
2. A record from this system of records may be disclosed, as a routine use, in the course of presenting evidence to a court, magistrate, or administrative tribunal, including disclosures to opposing counsel in the course of settlement negotiations.
3. A record in this system of records may be disclosed, as a routine use, to a Member of Congress submitting a request involving an individual, to whom the record pertains, when the individual has requested assistance from the Member with respect to the subject matter of the record.
4. A record in this system of records may be disclosed, as a routine use, to a contractor of the Agency having need for the information in order to perform a contract. Recipients of information shall be required to comply with the requirements of the Privacy Act of 1974, as amended, pursuant to 5 U.S.C. 552a(m).
5. A record related to an International Application filed under the Patent Cooperation Treaty in this system of records may be disclosed, as a routine use, to the International Bureau of the World Intellectual Property Organization, pursuant to the Patent Cooperation Treaty.
6. A record in this system of records may be disclosed, as a routine use, to another federal agency for purposes of National Security review (35 U.S.C. 181) and for review pursuant to the Atomic Energy Act (42 U.S.C. 218(c)).
7. A record from this system of records may be disclosed, as a routine use, to the Administrator, General Services, or his/her designee, during an inspection of records conducted by GSA as part of that agency's responsibility to recommend improvements in records management practices and programs, under authority of 44 U.S.C. 2904 and 2906. Such disclosure shall be made in accordance with the GSA regulations governing inspection of records for this purpose, and any other relevant (i.e., GSA or Commerce) directive. Such disclosure shall not be used to make determinations about individuals.
8. A record from this system of records may be disclosed, as a routine use, to the public after either publication of the application pursuant to 35 U.S.C. 122(b) or issuance of a patent pursuant to 35 U.S.C. 151. Further, a record may be disclosed, subject to the limitations of 37 CFR 1.14, as a routine use, to the public if the record was filed in an application which became abandoned or in which the proceedings were terminated and which application is referenced by either a published application, an application open to public inspection or an issued patent.
9. A record from this system of records may be disclosed, as a routine use, to a Federal, State, or local law enforcement agency, if the USPTO becomes aware of a violation or potential violation of law or regulation.

| Notice of Allowability | Application No. 15/096,686 | Applicant(s) NA, JONGJU | |
|---|---|---|---|
| | Examiner DAVID C. COMSTOCK | Art Unit 3733 | AIA (First Inventor to File) Status Yes |

***-- The MAILING DATE of this communication appears on the cover sheet with the correspondence address--***

All claims being allowable, PROSECUTION ON THE MERITS IS (OR REMAINS) CLOSED in this application. If not included herewith (or previously mailed), a Notice of Allowance (PTOL-85) or other appropriate communication will be mailed in due course. **THIS NOTICE OF ALLOWABILITY IS NOT A GRANT OF PATENT RIGHTS.** This application is subject to withdrawal from issue at the initiative of the Office or upon petition by the applicant. See 37 CFR 1.313 and MPEP 1308.

1. ☒ This communication is responsive to *terminal disclaimer and amendment filed 28 April 2017*.
   ☐ A declaration(s)/affidavit(s) under **37 CFR 1.130(b)** was/were filed on_____.
2. ☐ An election was made by the applicant in response to a restriction requirement set forth during the interview on _____; the restriction requirement and election have been incorporated into this action.
3. ☒ The allowed claim(s) is/are *21-40*. As a result of the allowed claim(s), you may be eligible to benefit from the **Patent Prosecution Highway** program at a participating intellectual property office for the corresponding application. For more information, please see http://www.uspto.gov/patents/init_events/pph/index.jsp or send an inquiry to PPHfeedback@uspto.gov.
4. ☒ Acknowledgment is made of a claim for foreign priority under 35 U.S.C. § 119(a)-(d) or (f).

   **Certified copies:**

   a) ☒ All b) ☐ Some *c) ☐ None of the:
   1. ☐ Certified copies of the priority documents have been received.
   2. ☒ Certified copies of the priority documents have been received in Application No. *13825083* .
   3. ☐ Copies of the certified copies of the priority documents have been received in this national stage application from the International Bureau (PCT Rule 17.2(a)).

   * Certified copies not received: _____.

Applicant has THREE MONTHS FROM THE "MAILING DATE" of this communication to file a reply complying with the requirements noted below. Failure to timely comply will result in ABANDONMENT of this application.
**THIS THREE-MONTH PERIOD IS NOT EXTENDABLE**.

5. ☐ CORRECTED DRAWINGS ( as "replacement sheets") must be submitted.
   ☐ including changes required by the attached Examiner's Amendment / Comment or in the Office action of Paper No./Mail Date _____.

   **Identifying indicia such as the application number (see 37 CFR 1.84(c)) should be written on the drawings in the front (not the back) of each sheet. Replacement sheet(s) should be labeled as such in the header according to 37 CFR 1.121(d).**
6. ☐ DEPOSIT OF and/or INFORMATION about the deposit of BIOLOGICAL MATERIAL must be submitted. Note the attached Examiner's comment regarding REQUIREMENT FOR THE DEPOSIT OF BIOLOGICAL MATERIAL.

**Attachment(s)**

1. ☐ Notice of References Cited (PTO-892)
2. ☐ Information Disclosure Statements (PTO/SB/08), Paper No./Mail Date _____
3. ☐ Examiner's Comment Regarding Requirement for Deposit of Biological Material
4. ☐ Interview Summary (PTO-413), Paper No./Mail Date _____ .
5. ☐ Examiner's Amendment/Comment
6. ☐ Examiner's Statement of Reasons for Allowance
7. ☐ Other _____.

| /DAVID C COMSTOCK/<br>Examiner, Art Unit 3733 | /Pedro Philogene/<br>Primary Examiner, Art Unit 3733 |
|---|---|

IN THE UNITED STATES PATENT AND TRADEMARK OFFICE

Application No.: 15/096,686 Filing Date: April 12, 2016

Patent No.: 9,775,774 Date of Patent: October 3, 2017

First Inventor: Jongju Na

Title: METHOD, SYSTEM, AND APPARATUS FOR DERMATOLOGICAL TREATMENT

Attorney Docket: YS-0072-SR-SE

---

**REQUEST FOR EXPEDITED ISSUANCE OF CERTIFICATE OF CORRECTION UNDER 37 C.F.R § 1.322 OF OFFICE MISTAKE**

Commissioner for Patents
P.O. Box 1450
Alexandria, VA 22313
ATTENTION: Decision and Certificate of Correction
Branch of the Patent Issue Division

Sir or Madam:

Applicant respectfully request that this Request for Certificate of Correction to correct an Office mistake be granted for the following reasons.

As evidenced by various records on file with the Office, including:

Official Filing Receipt issued on April 28, 2016

Updated Filing Receipts issued on September 7, 2016

Acknowledgment of a claim for foreign priority made in the Non-Final Office Action issued on November 30, 2016; and

Acknowledgment of a claim for foreign priority made in the Notice of Allowance issued on May 19, 2017,

claims for priority to and benefit of Korean Patent Application No. 10-2008-0076993, International Patent Application Nos. PCT/US2008/074131 and PCT/KR2012/001335, and United States Patent Application Nos. 61/449,080, 13/060,274, and 13/825,083 were made under 35 U.S.C. § 119, 120, and 365(c), and acknowledged by the Office. However, United States Patent No. 9,775,774, issued on October 3, 2017 does not indicate these claims of priority and benefit, which is error attributable solely to the Office.

Pursuant to 35 U.S.C. 254, Applicant herewith submits Form PTO-1050 being suitable for printing and requests issuance of a Certificate of Correction correcting the information as shown in the Form PTO-1050 and also as described below:

on the cover page of United States Patent No. 9,775,774, please insert:

a legend of --Related U.S. Application Data--;

item (63) reciting --Continuation of application No. 13/825,083, filed as application No. PCT/KR2012/001335 on Feb. 22, 2012, now Pat. No. 9,320,536, which is a continuation of application No. 13/060,274, filed as application No. PCT/US2008/074131 on Aug. 22, 2008, now Pat. No. 8,979,912--; and

item (60) reciting --Provisional application No. 61/449,080, filed on Mar. 3, 2011--.

Prompt and favorable consideration of this Request is respectfully requested.

It is believed that no fee is required in relation to this request. However, if there is any fee with respect to this request or otherwise, please charge to the Deposit Account 50-5622 maintained by the patentee's attorneys.

If it is believed that a telephone conference with Applicant's attorneys would be advantageous to the disposition of this case, a telephone call is cordially requested to the undersigned.

Respectfully submitted,

Date: **March 6, 2023**

By: / Yeasun Yoon/

Yeasun Yoon
USPTO Reg. No. 73,663
Jae Y. Park /Jae Y. Park/
USPTO Reg. No. 62,629
Customer No. 82,727
Attorney for Applicant(s)
Kile Park Reed & Houtteman PLLC
1101 30th St., NW
Suite 500
Washington, DC 20007
Tel. No.: 202-263-0809
Fax No.: 202-697-4306

PTO/AIA/81A (02-15)
Approved for use through 03/31/2021. OMB 0651-0035
U.S. Patent and Trademark Office; U.S. DEPARTMENT OF COMMERCE
Under the Paperwork Reduction Act of 1995 no persons are required to respond to a collection of information unless it displays a valid OMB control number

# PATENT - POWER OF ATTORNEY OR REVOCATION OF POWER OF ATTORNEY WITH A NEW POWER OF ATTORNEY AND CHANGE OF CORRESPONDENCE ADDRESS

| | |
|---|---|
| Patent Number | 9,775,774 |
| Issue Date | 10/03/2017 |
| First Named Inventor | Jongju Na |
| Title | METHOD, SYSTEM, AND APPARATUS FOR DERMATOLOGICAL |
| Attorney Docket No. | NA001KR_US2 |

I hereby revoke all previous powers of attorney given in the above-identified patent.

☐ A Power of Attorney is submitted herewith.

OR

☒ I hereby appoint Practitioner(s) associated with the Customer Number identified in the box at right as my/our attorney(s) or agent(s) with respect to the patent identified above, and to transact all business in the United States Patent and Trademark Office connected therewith: 82,727

OR

☐ I hereby appoint Practitioner(s) named below as my/our attorney(s) or agent(s) with respect to the patent identified above, and to transact all business in the United States Patent and Trademark Office connected therewith:

| Practitioner(s) Name | Registration Number |
|---|---|
| | |
| | |
| | |
| | |

Please recognize or change the correspondence address for the above-identified patent to:

☒ The address associated with the above-identified Customer Number.

OR

☐ The address associated with the Customer Number identified in the box at right:

OR

| | | | | | |
|---|---|---|---|---|---|
| ☐ Firm or Individual Name | | | | | |
| Address | | | | | |
| City | | State | | Zip | |
| Country | | | | | |
| Telephone | | Email | | | |

I am the:

☐ Applicant.

OR

☒ Patent owner.

*Statement under 37 CFR 3.73(c) (Form PTO/AIA/96) submitted herewith or filed on* _____.

**SIGNATURE of Applicant or Patent Owner**

| | | | |
|---|---|---|---|
| Signature | | Date | Feb. 28, 2023 |
| Name | Jongju Na | Telephone | 9496063885 |
| Title and Company | General Manager, Serendia LLC | | |

NOTE: Signatures of all the applicants or patent owners of the entire interest or their representative(s) are required. If more than one signature is required, submit multiple forms, check the box below, and identify the total number of forms submitted in the blank below.

☑ A total of 1 forms are submitted.

This collection of information is required by 37 CFR 1.31, 1.32, and 1.33. The information is required to obtain or retain a benefit by the public, which is to update (and by the USPTO to process) the file of a patent or reexamination proceeding. Confidentiality is governed by 35 U.S.C. 122 and 37 CFR 1.14. This collection is estimated to take 3 minutes to complete, including gathering, preparing, and submitting the completed application form to the USPTO. Time will vary depending upon the individual case. Any comments on the amount of time you require to complete this form and/or suggestions for reducing this burden, should be sent to the Chief Information Officer, U.S. Patent and Trademark Office, U.S. Department of Commerce, P.O. Box 1450, Alexandria, VA 22313-1450. DO NOT SEND FEES OR COMPLETED FORMS TO THIS ADDRESS. **SEND TO: Commissioner for Patents, P.O. Box 1450, Alexandria, VA 22313-1450.**

*If you need assistance in completing the form, call 1-800-PTO-9199 and select option 2.*

# Privacy Act Statement

The **Privacy Act of 1974 (P.L. 93-579)** requires that you be given certain information in connection with your submission of the attached form related to a patent application or patent. Accordingly, pursuant to the requirements of the Act, please be advised that: (1) the general authority for the collection of this information is 35 U.S.C. 2(b)(2); (2) furnishing of the information solicited is voluntary; and (3) the principal purpose for which the information is used by the U.S. Patent and Trademark Office is to process and/or examine your submission related to a patent application or patent. If you do not furnish the requested information, the U.S. Patent and Trademark Office may not be able to process and/or examine your submission, which may result in termination of proceedings or abandonment of the application or expiration of the patent.

The information provided by you in this form will be subject to the following routine uses:

1. The information on this form will be treated confidentially to the extent allowed under the Freedom of Information Act (5 U.S.C. 552) and the Privacy Act (5 U.S.C 552a). Records from this system of records may be disclosed to the Department of Justice to determine whether disclosure of these records is required by the Freedom of Information Act.
2. A record from this system of records may be disclosed, as a routine use, in the course of presenting evidence to a court, magistrate, or administrative tribunal, including disclosures to opposing counsel in the course of settlement negotiations.
3. A record in this system of records may be disclosed, as a routine use, to a Member of Congress submitting a request involving an individual, to whom the record pertains, when the individual has requested assistance from the Member with respect to the subject matter of the record.
4. A record in this system of records may be disclosed, as a routine use, to a contractor of the Agency having need for the information in order to perform a contract. Recipients of information shall be required to comply with the requirements of the Privacy Act of 1974, as amended, pursuant to 5 U.S.C. 552a(m).
5. A record related to an International Application filed under the Patent Cooperation Treaty in this system of records may be disclosed, as a routine use, to the International Bureau of the World Intellectual Property Organization, pursuant to the Patent Cooperation Treaty.
6. A record in this system of records may be disclosed, as a routine use, to another federal agency for purposes of National Security review (35 U.S.C. 181) and for review pursuant to the Atomic Energy Act (42 U.S.C. 218(c)).
7. A record from this system of records may be disclosed, as a routine use, to the Administrator, General Services, or his/her designee, during an inspection of records conducted by GSA as part of that agency's responsibility to recommend improvements in records management practices and programs, under authority of 44 U.S.C. 2904 and 2906. Such disclosure shall be made in accordance with the GSA regulations governing inspection of records for this purpose, and any other relevant (*i.e.*, GSA or Commerce) directive. Such disclosure shall not be used to make determinations about individuals.
8. A record from this system of records may be disclosed, as a routine use, to the public after either publication of the application pursuant to 35 U.S.C. 122(b) or issuance of a patent pursuant to 35 U.S.C. 151. Further, a record may be disclosed, subject to the limitations of 37 CFR 1.14, as a routine use, to the public if the record was filed in an application which became abandoned or in which the proceedings were terminated and which application is referenced by either a published application, an application open to public inspection or an issued patent.
9. A record from this system of records may be disclosed, as a routine use, to a Federal, State, or local law enforcement agency, if the USPTO becomes aware of a violation or potential violation of law or regulation.

PTO/AIA/96 (08-12)
Approved for use through 11/30/2020. OMB 0651-0031
U.S. Patent and Trademark Office; U.S. DEPARTMENT OF COMMERCE
Under the Paperwork Reduction Act of 1995, no persons are required to respond to a collection of information unless it displays a valid OMB control number.

# STATEMENT UNDER 37 CFR 3.73(c)

Applicant/Patent Owner: SERENDIA LLC

Application No./Patent No.: 9,775,774 Filed/Issue Date: 10/03/2017

Titled: METHOD, SYSTEM, AND APPARATUS FOR DERMATOLOGICAL TREATMENT

SERENDIA LLC, a Corporation

(Name of Assignee) (Type of Assignee, e.g., corporation, partnership, university, government agency, etc.)

states that, for the patent application/patent identified above, it is (choose **one** of options 1, 2, 3 or 4 below):

1. ☑ The assignee of the entire right, title, and interest.

2. ☐ An assignee of less than the entire right, title, and interest (check applicable box):

   ☐ The extent (by percentage) of its ownership interest is _____%. Additional Statement(s) by the owners holding the balance of the interest must be submitted to account for 100% of the ownership interest.

   ☐ There are unspecified percentages of ownership. The other parties, including inventors, who together own the entire right, title and interest are:

   Additional Statement(s) by the owner(s) holding the balance of the interest must be submitted to account for the entire right, title, and interest.

3. ☐ The assignee of an undivided interest in the entirety (a complete assignment from one of the joint inventors was made). The other parties, including inventors, who together own the entire right, title, and interest are:

   Additional Statement(s) by the owner(s) holding the balance of the interest must be submitted to account for the entire right, title, and interest.

4. ☐ The recipient, via a court proceeding or the like (*e.g.*, bankruptcy, probate), of an undivided interest in the entirety (a complete transfer of ownership interest was made). The certified document(s) showing the transfer is attached.

The interest identified in option 1, 2 or 3 above (not option 4) is evidenced by either (choose **one** of options A or B below):

A. ☐ An assignment from the inventor(s) of the patent application/patent identified above. The assignment was recorded in the United States Patent and Trademark Office at Reel _____, Frame _____, or for which a copy thereof is attached.

B. ☑ A chain of title from the inventor(s), of the patent application/patent identified above, to the current assignee as follows:

1. From: NA, JONGJU To: VIOL CO., LTD.

   The document was recorded in the United States Patent and Trademark Office at
   Reel 045935, Frame 0155, or for which a copy thereof is attached.

2. From: VIOL CO., LTD. To: SERENDIA LLC

   The document was recorded in the United States Patent and Trademark Office at
   Reel 054503, Frame 0344, or for which a copy thereof is attached.



This collection of information is required by 37 CFR 3.73(b). The information is required to obtain or retain a benefit by the public which is to file (and by the USPTO to process) an application. Confidentiality is governed by 35 U.S.C. 122 and 37 CFR 1.11 and 1.14. This collection is estimated to take 12 minutes to complete, including gathering, preparing, and submitting the completed application form to the USPTO. Time will vary depending upon the individual case. Any comments on the amount of time you require to complete this form and/or suggestions for reducing this burden, should be sent to the Chief Information Officer, U.S. Patent and Trademark Office, U.S. Department of Commerce, P.O. Box 1450, Alexandria, VA 22313-1450. DO NOT SEND FEES OR COMPLETED FORMS TO THIS ADDRESS. **SEND TO: Commissioner for Patents, P.O. Box 1450, Alexandria, VA 22313-1450.**

*If you need assistance in completing the form, call 1-800-PTO-9199 and select option 2.*

PTO/AIA/96 (08-12)
Approved for use through 11/30/2020. OMB 0651-0031
U.S. Patent and Trademark Office; U.S. DEPARTMENT OF COMMERCE
Under the Paperwork Reduction Act of 1995, no persons are required to respond to a collection of information unless it displays a valid OMB control number.

## STATEMENT UNDER 37 CFR 3.73(c)

3. From: _____ To: _____

The document was recorded in the United States Patent and Trademark Office at

Reel _____, Frame _____, or for which a copy thereof is attached.

4. From: _____ To: _____

The document was recorded in the United States Patent and Trademark Office at

Reel _____, Frame _____, or for which a copy thereof is attached.

5. From: _____ To: _____

The document was recorded in the United States Patent and Trademark Office at

Reel _____, Frame _____, or for which a copy thereof is attached.

6. From: _____ To: _____

The document was recorded in the United States Patent and Trademark Office at

Reel _____, Frame _____, or for which a copy thereof is attached.

☐ Additional documents in the chain of title are listed on a supplemental sheet(s).

☐ As required by 37 CFR 3.73(c)(1)(i), the documentary evidence of the chain of title from the original owner to the assignee was, or concurrently is being, submitted for recordation pursuant to 37 CFR 3.11.

[NOTE: A separate copy (i.e., a true copy of the original assignment document(s)) must be submitted to Assignment Division in accordance with 37 CFR Part 3, to record the assignment in the records of the USPTO. See MPEP 302.08]

The undersigned (whose title is supplied below) is authorized to act on behalf of the assignee.

| | |
|---|---|
| /Jae Y. Park/ | 2023-03-06 |
| Signature | Date |
| Jae Y. Park | 62629 |
| Printed or Typed Name | Title or Registration Number |

# Privacy Act Statement

The **Privacy Act of 1974 (P.L. 93-579)** requires that you be given certain information in connection with your submission of the attached form related to a patent application or patent. Accordingly, pursuant to the requirements of the Act, please be advised that: (1) the general authority for the collection of this information is 35 U.S.C. 2(b)(2); (2) furnishing of the information solicited is voluntary; and (3) the principal purpose for which the information is used by the U.S. Patent and Trademark Office is to process and/or examine your submission related to a patent application or patent. If you do not furnish the requested information, the U.S. Patent and Trademark Office may not be able to process and/or examine your submission, which may result in termination of proceedings or abandonment of the application or expiration of the patent.

The information provided by you in this form will be subject to the following routine uses:

1. The information on this form will be treated confidentially to the extent allowed under the Freedom of Information Act (5 U.S.C. 552) and the Privacy Act (5 U.S.C 552a). Records from this system of records may be disclosed to the Department of Justice to determine whether disclosure of these records is required by the Freedom of Information Act.
2. A record from this system of records may be disclosed, as a routine use, in the course of presenting evidence to a court, magistrate, or administrative tribunal, including disclosures to opposing counsel in the course of settlement negotiations.
3. A record in this system of records may be disclosed, as a routine use, to a Member of Congress submitting a request involving an individual, to whom the record pertains, when the individual has requested assistance from the Member with respect to the subject matter of the record.
4. A record in this system of records may be disclosed, as a routine use, to a contractor of the Agency having need for the information in order to perform a contract. Recipients of information shall be required to comply with the requirements of the Privacy Act of 1974, as amended, pursuant to 5 U.S.C. 552a(m).
5. A record related to an International Application filed under the Patent Cooperation Treaty in this system of records may be disclosed, as a routine use, to the International Bureau of the World Intellectual Property Organization, pursuant to the Patent Cooperation Treaty.
6. A record in this system of records may be disclosed, as a routine use, to another federal agency for purposes of National Security review (35 U.S.C. 181) and for review pursuant to the Atomic Energy Act (42 U.S.C. 218(c)).
7. A record from this system of records may be disclosed, as a routine use, to the Administrator, General Services, or his/her designee, during an inspection of records conducted by GSA as part of that agency's responsibility to recommend improvements in records management practices and programs, under authority of 44 U.S.C. 2904 and 2906. Such disclosure shall be made in accordance with the GSA regulations governing inspection of records for this purpose, and any other relevant (*i.e.*, GSA or Commerce) directive. Such disclosure shall not be used to make determinations about individuals.
8. A record from this system of records may be disclosed, as a routine use, to the public after either publication of the application pursuant to 35 U.S.C. 122(b) or issuance of a patent pursuant to 35 U.S.C. 151. Further, a record may be disclosed, subject to the limitations of 37 CFR 1.14, as a routine use, to the public if the record was filed in an application which became abandoned or in which the proceedings were terminated and which application is referenced by either a published application, an application open to public inspection or an issued patent.
9. A record from this system of records may be disclosed, as a routine use, to a Federal, State, or local law enforcement agency, if the USPTO becomes aware of a violation or potential violation of law or regulation.

# Electronic Acknowledgement Receipt

| | |
|---|---|
| **EFS ID:** | 47634366 |
| **Application Number:** | 15096686 |
| **International Application Number:** | |
| **Confirmation Number:** | 2620 |
| **Title of Invention:** | METHOD, SYSTEM, AND APPARATUS FOR DERMATOLOGICAL TREATMENT |
| **First Named Inventor/Applicant Name:** | Jongju Na |
| **Customer Number:** | 26338 |
| **Filer:** | Jae Y. Park/Emmeline Park |
| **Filer Authorized By:** | Jae Y. Park |
| **Attorney Docket Number:** | NA001KR_US2 |
| **Receipt Date:** | 06-MAR-2023 |
| **Filing Date:** | 12-APR-2016 |
| **Time Stamp:** | 17:32:26 |
| **Application Type:** | Utility under 35 USC 111(a) |

## Payment information:

| | |
|---|---|
| Submitted with Payment | no |

## File Listing:

| Document Number | Document Description | File Name | File Size(Bytes)/ Message Digest | Multi Part /.zip | Pages (if appl.) |
|---|---|---|---|---|---|
| 1 | Request for Certificate of Correction | CoC_Request_YS0072.pdf | 180402<br>6ab0734ebab28973fd4ce059058293d11414a220 | no | 2 |

**Warnings:**

| | | | | | |
|---|---|---|---|---|---|
| **Information:** | | | | | |
| 2 | Request for Certificate of Correction | CoC_Attachment_YS0072.pdf | 822102<br>3148ebe7dcd68a1a2dc6d5f7a84b919e4c980256 | no | 18 |
| **Warnings:** | | | | | |
| **Information:** | | | | | |
| 3 | Transmittal Letter | CoC_Transmittal_YS0072.pdf | 65246<br>bf24800b24fb7cb9781c1e92d34d5170be1d7de7 | no | 3 |
| **Warnings:** | | | | | |
| **Information:** | | | | | |
| 4 | Power of Attorney | POA_YS0072.pdf | 214806<br>221964cc7b17cbdfc5868b8de8a1a51b0402d909 | no | 2 |
| **Warnings:** | | | | | |
| **Information:** | | | | | |
| 5 | Assignee showing of ownership per 37 CFR 3.73 | Statement373C_YS0072.pdf | 201473<br>913aa4191263921557106e26e926d8d130711504 | no | 3 |
| **Warnings:** | | | | | |
| **Information:** | | | | | |
| | | **Total Files Size (in bytes):** | 1484029 | | |

**This Acknowledgement Receipt evidences receipt on the noted date by the USPTO of the indicated documents, characterized by the applicant, and including page counts, where applicable. It serves as evidence of receipt similar to a Post Card, as described in MPEP 503.**

**<u>New Applications Under 35 U.S.C. 111</u>**

**If a new application is being filed and the application includes the necessary components for a filing date (see 37 CFR 1.53(b)-(d) and MPEP 506), a Filing Receipt (37 CFR 1.54) will be issued in due course and the date shown on this Acknowledgement Receipt will establish the filing date of the application.**

**<u>National Stage of an International Application under 35 U.S.C. 371</u>**

**If a timely submission to enter the national stage of an international application is compliant with the conditions of 35 U.S.C. 371 and other applicable requirements a Form PCT/DO/EO/903 indicating acceptance of the application as a national stage submission under 35 U.S.C. 371 will be issued in addition to the Filing Receipt, in due course.**

**<u>New International Application Filed with the USPTO as a Receiving Office</u>**

**If a new international application is being filed and the international application includes the necessary components for an international filing date (see PCT Article 11 and MPEP 1810), a Notification of the International Application Number and of the International Filing Date (Form PCT/RO/105) will be issued in due course, subject to prescriptions concerning national security, and the date shown on this Acknowledgement Receipt will establish the international filing date of the application.**

UNITED STATES PATENT AND TRADEMARK OFFICE

UNITED STATES DEPARTMENT OF COMMERCE
**United States Patent and Trademark Office**
Address: COMMISSIONER FOR PATENTS
P.O. Box 1450
Alexandria, Virginia 22313-1450
www.uspto.gov

| APPLICATION NUMBER | FILING OR 371(C) DATE | FIRST NAMED APPLICANT | ATTY. DOCKET NO./TITLE |
|---|---|---|---|
| 15/096,686 | 04/12/2016 | Jongju Na | NA001KR_US2 |

**CONFIRMATION NO. 2620**

**POA ACCEPTANCE LETTER**

82727
KILE PARK REED & HOUTTEMAN PLLC
JAE Y PARK
1101 30th Street, N.W.
Suite 500
Washington, DC 20007

*OC000000137568161*

Date Mailed: 03/15/2023

## NOTICE OF ACCEPTANCE OF POWER OF ATTORNEY

This is in response to the Power of Attorney filed 03/06/2023.

The Power of Attorney in this application is accepted. Correspondence in this application will be mailed to the above address as provided by 37 CFR 1.33.

Questions about the contents of this notice and the requirements it sets forth should be directed to the Office of Data Management, Application Assistance Unit, at **(571) 272-4000** or **(571) 272-4200** or **1-888-786-0101**.

/ttran/

UNITED STATES PATENT AND TRADEMARK OFFICE

UNITED STATES DEPARTMENT OF COMMERCE
United States Patent and Trademark Office
Address: COMMISSIONER FOR PATENTS
P.O. Box 1450
Alexandria, Virginia 22313-1450
www.uspto.gov

| APPLICATION NUMBER | FILING OR 371(C) DATE | FIRST NAMED APPLICANT | ATTY. DOCKET NO./TITLE |
|---|---|---|---|
| 15/096,686 | 04/12/2016 | Jongju Na | NA001KR_US2 |

**CONFIRMATION NO. 2620**

**POWER OF ATTORNEY NOTICE**

26338
MERLE W. RICHMAN, III
P.O. BOX 3333
LA JOLLA, CA 92038

*OC000000137568156*

Date Mailed: 03/15/2023

## NOTICE REGARDING CHANGE OF POWER OF ATTORNEY

This is in response to the Power of Attorney filed 03/06/2023.

- The Power of Attorney to you in this application has been revoked by the assignee who has intervened as provided by 37 CFR 3.71. Future correspondence will be mailed to the new address of record(37 CFR 1.33).

Questions about the contents of this notice and the requirements it sets forth should be directed to the Office of Data Management, Application Assistance Unit, at **(571) 272-4000** or **(571) 272-4200** or **1-888-786-0101**.

/ttran/

**To:** info@kilepark.com,jpark@kilepark.com,email@kilepark.com
**From:** PAIR_eOfficeAction@uspto.gov
**Cc:** PAIR_eOfficeAction@uspto.gov
**Subject:** Private PAIR Correspondence Notification for Customer Number 82727

Mar 15, 2023 04:22:42 AM

Dear PAIR Customer:

KILE PARK REED & HOUTTEMAN PLLC
JAE Y PARK
1101 30th Street, N.W.
Suite 500
Washington, DC 20007
UNITED STATES

The following USPTO patent application(s) associated with your Customer Number, 82727 , have new outgoing correspondence. This correspondence is now available for viewing in Private PAIR.

The official date of notification of the outgoing correspondence will be indicated on the form PTOL-90 accompanying the correspondence.

Disclaimer:
The list of documents shown below is provided as a courtesy and is not part of the official file wrapper. The content of the images shown in PAIR is the official record.

| Application | Document | Mailroom Date | Attorney Docket No. |
|---|---|---|---|
| 15096686 | N570 | 03/15/2023 | NA001KR_US2 |
| | N570 | 03/15/2023 | NA001KR_US2 |

To view your correspondence online or update your email addresses, please visit us anytime at https://sportal.uspto.gov/secure/myportal/privatepair.

If you have any questions, please email the Electronic Business Center (EBC) at EBC@uspto.gov with 'e-Office Action' on the subject line or call 1-866-217-9197 during the following hours:

Monday - Friday 6:00 a.m. to 12:00 a.m.

Thank you for prompt attention to this notice,

UNITED STATES PATENT AND TRADEMARK OFFICE

PATENT APPLICATION INFORMATION RETRIEVAL SYSTEM

UNITED STATES PATENT AND TRADEMARK OFFICE

# CERTIFICATE OF CORRECTION



PATENT NO. : 9,775,774 B2
APPLICATION NO. : 15/096686
DATED : October 3, 2017
INVENTOR(S) : Jongju Na

It is certified that error appears in the above-identified patent and that said Letters Patent is hereby corrected as shown below:

On the Title Page

There should be Related U.S. Application Data reciting:
--(63) Continuation of application No. 13/825,083, filed as application No. PCT/KR2012/001335 on Feb. 22, 2012, now Pat. No. 9,320,536, which is a continuation of application No. 13/060,274, filed as application No. PCT/US2008/074131 on Aug. 22, 2008, now Pat. No. 8,979,912
(60) Provisional application No. 61/449,080, filed on Mar. 3, 2011--.

Signed and Sealed this
Fourth Day of April, 2023

Katherine Kelly Vidal

Katherine Kelly Vidal
*Director of the United States Patent and Trademark Office*

Trials@uspto.gov
571-272-7822

Paper No. 4

UNITED STATES PATENT AND TRADEMARK OFFICE

---

BEFORE THE PATENT TRIAL AND APPEAL BOARD

---

JEISYS MEDICAL INC. and ILOODA CO., LTD.,
Petitioner,

v.

SERENDIA, LLC
Patent Owner.

---

Case IPR2024-00383
Patent 9,775,774

---

Mailed: January 23, 2024

Before Cathy Underwood, *Trial Paralegal*

NOTICE OF FILING DATE ACCORDED TO PETITION
AND
TIME FOR FILING PATENT OWNER PRELIMINARY RESPONSE

The petition for *inter partes* review, filed in the above proceeding has been accorded the filing date of January 9, 2024.

Patent Owner may file a preliminary response to the petition no later than three months from the date of this notice. The preliminary response is limited to setting forth the reasons why the requested review should not be instituted. Patent Owner may also file an election to waive the preliminary response to expedite the proceeding. For more information, please consult

the Office Patent Trial Practice Guide, 77 Fed. Reg. 48756 (Aug. 14, 2012), which is available on the Board Web site at http://www.uspto.gov/PTAB.

Patent Owner is advised of the requirement to submit mandatory notice information under 37 C.F.R. § 42.8(a)(2) within 21 days of service of the petition. Mandatory notices include identifying any other judicial or administrative matter that would affect, or be affected by, a decision in the proceeding. 37 C.F.R. § 42.8(b)(2). Such administrative matters include requests for certificates of correction.

The parties are encouraged to use the heading on the first page of this Notice for all future filings in the proceeding.

The parties are advised that under 37 C.F.R. § 42.10(c), recognition of counsel *pro hac vice* requires a showing of good cause. The parties are authorized to file motions for *pro hac vice* admission under 37 C.F.R. § 42.10(c). Such motions shall be filed in accordance with the "Order -- Authorizing Motion *for Pro Hac Vice* Admission" in Case IPR2013-00639, Paper 7, a copy of which is available on the Board Web site under "Representative Orders, Decisions, and Notices."

The parties are reminded that unless otherwise permitted by 37 C.F.R. § 42.6(b)(2), all filings in this proceeding must be made electronically in the Patent Trial Appeal Case Tracking System (P-TACTS), accessible from the Board Web site at http://www.uspto.gov/PTAB.

To file documents, users must first obtain a user ID by registering with MyUSPTO. Information regarding how to register with MyUSPTO and use P-TACTS is available at the Board Web site at https://www.uspto.gov/patents/ptab/patent-trial-and-appeal-case-tracking-system-p-tacts.

The parties are directed to contact the Board within a month of this Order if there is a need to discuss proposed changes to this Scheduling Order or proposed motions that have not been authorized in this Order or other prior Order or Notice. *See* Consolidated Trial Practice Guide ("Trial Practice Guide")[1] at 9–10, 65 (guidance in preparing for a conference call); *see also* 84 Fed. Reg. 64,280 (Nov. 21, 2019). A request for an initial conference call shall include a list of proposed motions, if any.

The parties may request additional conference calls as needed. Any email requesting a conference call with the Board should: (a) copy all parties, (b) indicate generally the relief being requested or the subject matter of the conference call, (c) include multiple times when all parties are available, (d) state whether the opposing party opposes any relief requested, and (e) if opposed, either certify that the parties have met and conferred telephonically or in person in an attempt to reach agreement, or explain why such meet and confer did not occur. The email may not contain substantive argument and, unless otherwise authorized, may not include attachments. *See* Trial Practice Guide at 9–10. If practicable, in order to ensure emails are consistent with the above, the panel recommends that the parties send a single, joint email that includes items (a)–(e).

If there are any questions pertaining to this notice, please contact Cathy Underwood at 571-272-8358 or the Patent Trial and Appeal Board at 571-272-7822.

[1] Available at https://www.uspto.gov/TrialPracticeGuideConsolidated.

PETITIONER:

Wesley Mueller
Leonard Hua
Paul Filbin
Brent Chatham
wmueller@leydig.com
lhua@leydig.com
pfilbin@leydig.com
bchatham@leydig.com

Scott Weidenfeller
Anupam Sharma
Peter Chen
sweidenfeller@cov.com
asharma@cov.com
pchen@cov.com

Wonseon Choi
wchoi@steptoe.com

PATENT OWNER:

Jae Y Park
KILE PARK REED & HOUTTEMAN PLLC
1101 30th Street, N.W.
Suite 500
Washington, DC 20007

and

Timothy Devlin
DEVLIN LAW FIRM LLC
1526 Gilpin Avenue
Wilmington, DE 19806
tdevlin@devlinlawfirm.com

**NOTICE CONCERNING ALTERNATIVE DISPUTE RESOLUTION (ADR)**

The Patent Trial and Appeal Board (PTAB) strongly encourages parties who are considering settlement to consider alternative dispute resolution as a means of settling the issues that may be raised in an AIA trial proceeding. Many AIA trials are settled prior to a Final Written Decision. Those considering settlement may wish to consider alternative dispute resolution techniques early in a proceeding to produce a quicker, mutually agreeable resolution of a dispute or to at least narrow the scope of matters in dispute. Alternative dispute resolution has the potential to save parties time and money.

Many non-profit organizations, both inside and outside the intellectual property field, offer alternative dispute resolution services. Listed below are the names and addresses of several such organizations. The listings are provided for the convenience of parties involved in cases before the PTAB; the PTAB does not sponsor or endorse any particular organization's alternative dispute resolution services. In addition, consideration may be given to utilizing independent alternative dispute resolution firms. Such firms may be located through a standard keyword Internet search.

| CPR INSTITUTE FOR DISPUTE RESOLUTION | AMERICAN INTELLECTUAL PROPERTY LAW ASSOCIATION (AIPLA) | AMERICAN ARBITRATION ASSOCIATION (AAA) | WORLD INTELLECTUAL PROPERTY ORGANIZATION (WIPO) | AMERICAN BAR ASSOCIATION (ABA) |
|---|---|---|---|---|
| Telephone: (212) 949-6490 | Telephone: (703) 415-0780 | Telephone: (212) 484-3266 | Telephone: 41 22 338 9111 | Telephone : (202) 662-1000 |
| Fax: (212) 949-8859 | Fax: (703) 415-0786 | Fax: (212) 307-4387 | Fax: 41 22 733 5428 | N/A |
| 575 Lexington Ave | 241 18th Street, South, Suite 700 | 140 West 51st Street | 34, chemin des Colombettes | 1050 Connecticut Ave, NW |
| New York, NY 10022 | Arlington, VA 22202 | New York, NY 10020 | CH-1211 Geneva 20, Switzerland | Washington D.C. 20036 |
| www.cpradr.org | www.aipla.org | www.adr.org | www.wipo.int | www.americanbar.org |

If parties to an AIA trial proceeding consider using alternative dispute resolution, the PTAB would like to know whether the parties ultimately decided to engage in alternative dispute resolution and the reasons why or

why not. If the parties actually engage in alternative dispute resolution, the PTAB would be interested to learn what mechanism (e.g., arbitration, mediation, etc.) was used and the general result. Such a statement from the parties is not required but would be helpful to the PTAB in assessing the value of alternative dispute resolution to parties involved in AIA trial proceedings. To report an experience with ADR, please forward a summary of the particulars to the following email address: PTAB_ADR_Comments@uspto.gov

PTO/AIA/96 (11-23)
Approved for use through 05/31/2024. OMB 0651-0031
U.S. Patent and Trademark Office; U.S. DEPARTMENT OF COMMERCE
Under the Paperwork Reduction Act of 1995, no persons are required to respond to a collection of information unless it displays a valid OMB control number.

# STATEMENT UNDER 37 CFR 3.73(c)

First Named Inventor/Patent Owner: Serendia LLC

Application No./Patent No.: 9,775,774 Filed/Issue Date: Oct. 3, 2017

Titled: Method, system, and apparatus for dermatological treatment

Serendia LLC, a limited liability company

(Name of Assignee) (Type of Assignee, e.g., corporation, partnership, university, government agency, etc.)

states that, for the patent application/patent identified above, it is (choose **one** of options 1, 2, 3 or 4 below):

1. ☑ The assignee of the entire right, title, and interest.

2. ☐ An assignee of less than the entire right, title, and interest (check applicable box):

   ☐ The extent (by percentage) of its ownership interest is _____%. Additional Statement(s) by the owners holding the balance of the interest must be submitted to account for 100% of the ownership interest.

   ☐ There are unspecified percentages of ownership. The other parties, including inventors, who together own the entire right, title and interest are:

   Additional Statement(s) by the owner(s) holding the balance of the interest must be submitted to account for the entire right, title, and interest.

3. ☐ The assignee of an undivided interest in the entirety (a complete assignment from one of the joint inventors was made). The other parties, including inventors, who together own the entire right, title, and interest are:

   Additional Statement(s) by the owner(s) holding the balance of the interest must be submitted to account for the entire right, title, and interest.

4. ☐ The recipient, via a court proceeding or the like (*e.g.*, bankruptcy, probate), of an undivided interest in the entirety (a complete transfer of ownership interest was made). The certified document(s) showing the transfer is attached.

The interest identified in option 1, 2 or 3 above (not option 4) is evidenced by either (choose **one** of options A or B below):

A. ☐ An assignment from the inventor(s) of the patent application/patent identified above. The assignment was recorded in the United States Patent and Trademark Office at Reel _____, Frame _____, or for which a copy thereof is attached*.

B. ☑ A chain of title from the inventor(s), of the patent application/patent identified above, to the current assignee as follows:

1. From: Jongju Na To: Viol Co., Ltd.

   The document was recorded in the United States Patent and Trademark Office at
   Reel 045935, Frame 0155, or for which a copy thereof is attached*.

2. From: Viol Co., Ltd. To: Serendia LLC

   The document was recorded in the United States Patent and Trademark Office at
   Reel 054503, Frame 0344, or for which a copy thereof is attached*.



A Federal agency may not conduct or sponsor, and a person is not required to respond to, nor shall a person be subject to a penalty for failure to comply with an information collection subject to the requirements of the Paperwork Reduction Act of 1995, unless the information collection has a currently valid OMB Control Number. The OMB Control Number for this information collection is 0651-0031. Public burden for this form is estimated to average 12 minutes per response, including the time for reviewing instructions, searching existing data sources, gathering and maintaining the data needed, and completing and reviewing the information collection. Send comments regarding this burden estimate or any other aspect of this information collection, including suggestions for reducing this burden to the Chief Administrative Officer, United States Patent and Trademark Office, P.O. Box 1450, Alexandria, VA 22313-1450 or email InformationCollection@uspto.gov. DO NOT SEND FEES OR COMPLETED FORMS TO THIS ADDRESS. **SEND TO: Commissioner for Patents, P.O. Box 1450, Alexandria, VA 22313-1450.**

*If you need assistance in completing the form, call 1-800-PTO-9199 and select option 2.*

Under the Paperwork Reduction Act of 1995, no persons are required to respond to a collection of information unless it displays a valid OMB control number.

# STATEMENT UNDER 37 CFR 3.73(c)

3. From: _____ To: _____

The document was recorded in the United States Patent and Trademark Office at

Reel _____, Frame _____, or for which a copy thereof is attached*.

4. From: _____ To: _____

The document was recorded in the United States Patent and Trademark Office at

Reel _____, Frame _____, or for which a copy thereof is attached*.

5. From: _____ To: _____

The document was recorded in the United States Patent and Trademark Office at

Reel _____, Frame _____, or for which a copy thereof is attached*.

6. From: _____ To: _____

The document was recorded in the United States Patent and Trademark Office at

Reel _____, Frame _____, or for which a copy thereof is attached*.

☐ Additional documents in the chain of title are listed on a supplemental sheet(s).

☐ *As required by 37 CFR 3.73(c)(1)(i), the documentary evidence of the chain of title from the original owner to the assignee was, or concurrently is being, submitted for recordation pursuant to 37 CFR 3.11.

[NOTE: A separate copy (i.e., a true copy of the original assignment document(s)) must be submitted to Assignment Division in accordance with 37 CFR Part 3, to record the assignment in the records of the USPTO. See MPEP 302.08]

The undersigned (whose title is supplied below) is authorized to act on behalf of the assignee.

| | |
|---|---|
| /Robert S. Blasi/ | Apr. 19, 2024 |
| Signature | Date |
| Robert S. Blasi, Esq. | 50,389 |
| Printed or Typed Name | Title or Registration Number |

# Privacy Act Statement

The Privacy Act of 1974 (P.L. 93-579) requires that you be given certain information in connection with your submission of the attached form related to a patent application or patent. The United States Patent and Trademark Office (USPTO) collects the information in this record under authority of 35 U.S.C. 2. The USPTO's system of records is used to manage all applicant and owner information including name, citizenship, residence, post office address, and other information with respect to inventors and their legal representatives pertaining to the applicant's/owner's activities in connection with the invention for which a patent is sought or has been granted. The applicable Privacy Act System of Records Notice for the information collected in this form is COMMERCE/PAT-TM-7 Patent Application Files, available in the Federal Register at 78 FR 19243 (March 29, 2013). https://www.govinfo.gov/content/pkg/FR-2013-03-29/pdf/2013-07341.pdf

Routine uses of the information in this record may include disclosure to:

1) law enforcement, in the event that the system of records indicates a violation or potential violation of law;

2) a federal, state, local, or international agency, in response to its request;

3) a contractor of the USPTO having need for the information in order to perform a contract;

4) the Department of Justice for determination of whether the Freedom of Information Act (FOIA) requires disclosure of the record;

5) a Member of Congress submitting a request involving an individual to whom the record pertains, when the individual has requested the Member's assistance with respect to the subject matter of the record;

6) a court, magistrate, or administrative tribunal, in the course of presenting evidence, including disclosures to opposing counsel in the course of settlement negotiations;

7) the Administrator, General Services Administration (GSA), or their designee, during an inspection of records conducted by GSA under authority of 44 U.S.C. 2904 and 2906, in accordance with the GSA regulations and any other relevant (i.e., GSA or Commerce) directive, where such disclosure shall not be used to make determinations about individuals;

8) another federal agency for purposes of National Security review (35 U.S.C. 181) and for review pursuant to the Atomic Energy Act (42 U.S.C. 218(c));

9) the Office of Personnel Management (OPM) for personnel research purposes; and

10) the Office of Management and Budget (OMB) for legislative coordination and clearance.

If you do not furnish the information requested on this form, the USPTO may not be able to process and/or examine your submission, which may result in termination of proceedings, abandonment of the application, and/or expiration of the patent.

Doc Code: STAT.DISCLMR
Document Description: Statutory Disclaimers per Manual of Patent Examining Procedure(MPEP) 1490

PTO/SB/43 (11-23)
Approved for use through 05/31/2024. OMB 0651-0031
U.S. Patent and Trademark Office; U.S. DEPARTMENT OF COMMERCE
Under the Paperwork Reduction Act of 1995, no persons are required to respond to a collection of information unless it displays a valid OMB control number.

## DISCLAIMER IN A PATENT UNDER 37 CFR 1.321(a)

| Name of Patentee | Docket Number (optional) |
|---|---|
| Jongju Na | YS-0073-SR-SE |
| **Patent Number** | **Date Patent Issued** |
| 9,775,774 | Oct. 3, 2017 |

Title of Invention: Method, system, and apparatus for dermatological treatment

Patentee hereby disclaims:

- [x] the following complete claim(s) in the above-identified patent: claims 1-12 and 15-20.
- [ ] the terminal part of the term of the above-identified patent beginning on the date: _____.
- [ ] the entire term of the above-identified patent.

The disclaimer is binding on the patentee and its successors or assigns.

The extent of patentee's ownership interest in the above-identified patent is: assignee of record of entire interest.

The fee for this disclaimer is set forth in 37 CFR 1.20(d) and is being paid in the following manner:

- [x] payment by the USPTO patent electronic filing system.
- [ ] the Director is hereby authorized to charge any fees which may be required, or credit any overpayment, to Deposit Account No. _____.
- [ ] payment by credit card. Form PTO-2038 is attached.
- [ ] a check in the amount of the fee is enclosed.

WARNING: Information on this form may become public. Credit card information should not be included on this form. Provide credit card information and authorization on form PTO-2038.

The undersigned is:

- [ ] patentee. If patentee is a juristic entity, the undersigned is authorized to act on behalf of the juristic entity.
- [x] attorney or agent of record.

| Signature | Date |
|---|---|
| /Robert S. Blasi/ | Apr. 19, 2024 |
| **Name (printed/typed)** | **Practitioner registration number** |
| Robert S. Blasi, Esq. | 50,389 |

***Note:*** See 37 CFR 1.4(d) for signature requirements and certifications.

A Federal agency may not conduct or sponsor, and a person is not required to respond to, nor shall a person be subject to a penalty for failure to comply with an information collection subject to the requirements of the Paperwork Reduction Act of 1995, unless the information collection has a currently valid OMB Control Number. The OMB Control Number for this information collection is 0651-0031. Public burden for this form is estimated to average 12 minutes per response, including the time for reviewing instructions, searching existing data sources, gathering and maintaining the data needed, and completing and reviewing the information collection. Send comments regarding this burden estimate or any other aspect of this information collection, including suggestions for reducing this burden to the Chief Administrative Officer, United States Patent and Trademark Office, P.O. Box 1450, Alexandria, VA 22313-1450 or email InformationCollection@uspto.gov. DO NOT SEND FEES OR COMPLETED FORMS TO THIS ADDRESS. If filing the completed form by mail, send to: Commissioner for Patents, P.O. Box 1450, Alexandria, VA 22313-1450.

*If you need assistance in completing the form, call 1-800-PTO-9199 and select option 2.*

**Privacy Act Statement**

The Privacy Act of 1974 (P.L. 93-579) requires that you be given certain information in connection with your submission of the attached form related to a patent application or patent. The United States Patent and Trademark Office (USPTO) collects the information in this record under authority of 35 U.S.C. 2. The USPTO's system of records is used to manage all applicant and owner information including name, citizenship, residence, post office address, and other information with respect to inventors and their legal representatives pertaining to the applicant's/owner's activities in connection with the invention for which a patent is sought or has been granted. The applicable Privacy Act System of Records Notice for the information collected in this form is COMMERCE/PAT-TM-7 Patent Application Files, available in the Federal Register at 78 FR 19243 (March 29, 2013). https://www.govinfo.gov/content/pkg/FR-2013-03-29/pdf/2013-07341.pdf

Routine uses of the information in this record may include disclosure to:

1) law enforcement, in the event that the system of records indicates a violation or potential violation of law;

2) a federal, state, local, or international agency, in response to its request;

3) a contractor of the USPTO having need for the information in order to perform a contract;

4) the Department of Justice for determination of whether the Freedom of Information Act (FOIA) requires disclosure of the record;

5) a Member of Congress submitting a request involving an individual to whom the record pertains, when the individual has requested the Member's assistance with respect to the subject matter of the record;

6) a court, magistrate, or administrative tribunal, in the course of presenting evidence, including disclosures to opposing counsel in the course of settlement negotiations;

7) the Administrator, General Services Administration (GSA), or their designee, during an inspection of records conducted by GSA under authority of 44 U.S.C. 2904 and 2906, in accordance with the GSA regulations and any other relevant (i.e., GSA or Commerce) directive, where such disclosure shall not be used to make determinations about individuals;

8) another federal agency for purposes of National Security review (35 U.S.C. 181) and for review pursuant to the Atomic Energy Act (42 U.S.C. 218(c));

9) the Office of Personnel Management (OPM) for personnel research purposes; and

10) the Office of Management and Budget (OMB) for legislative coordination and clearance.

If you do not furnish the information requested on this form, the USPTO may not be able to process and/or examine your submission, which may result in termination of proceedings, abandonment of the application, and/or expiration of the patent.

UNITED STATES
PATENT AND TRADEMARK OFFICE

P.O. Box 1450
Alexandria, VA 22313 - 1450
www.uspto.gov

# ELECTRONIC ACKNOWLEDGEMENT RECEIPT

| APPLICATION # | RECEIPT DATE / TIME | ATTORNEY DOCKET # |
|---|---|---|
| **15/096,686** | **04/19/2024 09:11:41 PM Z ET** | **YS-0073-SR-SE** |

## Title of Invention

METHOD, SYSTEM, AND APPARATUS FOR DERMATOLOGICAL TREATMENT

## Application Information

| | | | |
|---|---|---|---|
| APPLICATION TYPE | Utility - Nonprovisional Application under 35 USC 111(a) | PATENT # | 9775774 |
| CONFIRMATION # | 2620 | FILED BY | Robert Blasi |
| PATENT CENTER # | 65175110 | FILING DATE | 04/12/2016 |
| CUSTOMER # | 82727 | FIRST NAMED INVENTOR | Jongju Na |
| CORRESPONDENCE ADDRESS | - | AUTHORIZED BY | - |

## Documents

**TOTAL DOCUMENTS: 3**

| DOCUMENT | PAGES | DESCRIPTION | SIZE (KB) |
|---|---|---|---|
| 2024-04-19_FC_Exec_POA_774.pdf | 2 | Power of Attorney | 159 KB |
| Warning: The PDF file has been signed with a digital signature and the legal effect of the document will be based on the contents of the file not the digital signature. | | | |
| 2024-04-19_FINAL_3.73_stmt_US9775774.pdf | 3 | Assignee showing of ownership per 37 CFR 3.73 | 221 KB |
| 2024-04-19_Rule_321_disclaimer_774.pdf | 2 | Statutory disclaimers per Manual of Patent Examining Procedure(MPEP) 1490. | 249 KB |

## Digest

| DOCUMENT | MESSAGE DIGEST(SHA-512) |
|---|---|
| 2024-04-19_FC_Exec_POA_774.pdf | F4AE9E8870BDFD09178A0D79D47CCC1D9BBB707FCFBD2C024C5FB0140B9E91E920668D29489116D1C261170DA8EC27C5D4084362F680BD7BD3DC219F32D00805 |
| 2024-04-19_FINAL_3.73_stmt_US9775774.pdf | A28B6BF74D2673822E20BF18A2EDD837103F5FFC3657BCE369CA7F79BB6DAE2725763B41F76A4FAA664CF587D3EFD5335D17557A379BF19E76778B7FA8F244E0 |
| 2024-04-19_Rule_321_disclaimer_774.pdf | 2C0C3771FC14B8A36D668525A48493DC51D19D316DAA60782A121F433001DAB74BD28E8F34D5638640DF7FECFD2FD353EC0840F48A914B98EFD6237D68D0ACBB |

This Acknowledgement Receipt evidences receipt on the noted date by the USPTO of the indicated documents, characterized by the applicant, and including page counts, where applicable. It serves as evidence of receipt similar to a Post Card, as described in MPEP 503.

**New Applications Under 35 U.S.C. 111**

If a new application is being filed and the application includes the necessary components for filing date (see 37 CFR 1.53(b)-(d) and MPEP 506), a Filing Receipt (37 CFR 1.54) will be issued in due course and the date shown on this Acknowledgement Receipt will establish the filing date of the application.

**National Stage of an International Application under 35 U.S.C. 371**

If a timely submission to enter the national stage of an international application is compliant with the conditions of 35 U.S.C. 371 and other applicable requirements a Form PCT/DO/EO/903 indicating acceptance of the application as a national stage submission under 35 U.S.C. 371 will be issued in addition to the Filing Receipt, in due course.

**New International Application Filed with the USPTO as a Receiving Office**

If a new international application is being filed and the international application includes the necessary components for an international filing date (see PCT Article 11 and MPEP 1810), a Notification of the International Application Number and of the International Filing Date (Form PCT/RO/105) will be issued in due course, subject to prescriptions concerning national security, and the date shown on this Acknowledgement Receipt will establish the international filing date of the application.

UNITED STATES
PATENT AND TRADEMARK OFFICE

P.O. Box 1450
Alexandria, VA 22313 - 1450
www.uspto.gov

# ELECTRONIC PAYMENT RECEIPT

| APPLICATION # | RECEIPT DATE / TIME | ATTORNEY DOCKET # |
|---|---|---|
| 15/096,686 | 04/19/2024 09:11:41 PM Z ET | YS-0073-SR-SE |

## Title of Invention

METHOD, SYSTEM, AND APPARATUS FOR DERMATOLOGICAL TREATMENT

## Application Information

| | | | |
|---|---|---|---|
| APPLICATION TYPE | Utility - Nonprovisional Application under 35 USC 111(a) | PATENT # | 9775774 |
| CONFIRMATION # | 2620 | FILED BY | Robert Blasi |
| PATENT CENTER # | 65175110 | AUTHORIZED BY | - |
| CUSTOMER # | 82727 | FILING DATE | 04/12/2016 |
| CORRESPONDENCE ADDRESS | - | FIRST NAMED INVENTOR | Jongju Na |

## Payment Information

| PAYMENT METHOD | PAYMENT TRANSACTION ID | PAYMENT AUTHORIZED BY |
|---|---|---|
| CARD / 9392 | E20244IL12328914 | Robert Blasi |

| FEE CODE | DESCRIPTION | ITEM PRICE($) | QUANTITY | ITEM TOTAL($) |
|---|---|---|---|---|
| 1814 | STATUTORY DISCLAIMER, INCLUDING TERMINAL DISCLAIMER | 170.00 | 1 | 170.00 |
| | | | TOTAL AMOUNT: | $170.00 |

This Acknowledgement Receipt evidences receipt on the noted date by the USPTO of the indicated documents, characterized by the applicant, and including page counts, where applicable. It serves as evidence of receipt similar to a Post Card, as described in MPEP 503.

**New Applications Under 35 U.S.C. 111**

If a new application is being filed and the application includes the necessary components for filing date (see 37 CFR 1.53(b)-(d) and MPEP 506), a Filing Receipt (37 CFR 1.54) will be issued in due course and the date shown on this Acknowledgement Receipt will establish the filing date of the application.

**National Stage of an International Application under 35 U.S.C. 371**

If a timely submission to enter the national stage of an international application is compliant with the conditions of 35 U.S.C. 371 and other applicable requirements a Form PCT/DO/EO/903 indicating acceptance of the application as a national stage submission under 35 U.S.C. 371 will be issued in addition to the Filing Receipt, in due course.

**New International Application Filed with the USPTO as a Receiving Office**

If a new international application is being filed and the international application includes the necessary components for an international filing date (see PCT Article 11 and MPEP 1810), a Notification of the International Application Number and of the International Filing Date (Form PCT/RO/105) will be issued in due course, subject to prescriptions concerning national security, and the date shown on this Acknowledgement Receipt will establish the international filing date of the application.

PTO/AIA/81A (02-15)
Approved for use through 03/31/2021. OMB 0651-0035
U.S. Patent and Trademark Office; U.S. DEPARTMENT OF COMMERCE
Under the Paperwork Reduction Act of 1995 no persons are required to respond to a collection of information unless it displays a valid OMB control number

# PATENT - POWER OF ATTORNEY OR REVOCATION OF POWER OF ATTORNEY WITH A NEW POWER OF ATTORNEY AND CHANGE OF CORRESPONDENCE ADDRESS

| | |
|---|---|
| Patent Number | 9,775,774 |
| Issue Date | Oct. 3, 2017 |
| First Named Inventor | Jongju Na |
| Title | Method, system, and apparatus for dermatological treatment |
| Attorney Docket No. | YS-0073-SR-SE |

I hereby revoke all previous powers of attorney given in the above-identified patent.

☐ A Power of Attorney is submitted herewith.

OR

☒ I hereby appoint Practitioner(s) associated with the Customer Number identified in the box at right as my/our attorney(s) or agent(s) with respect to the patent identified above, and to transact all business in the United States Patent and Trademark Office connected therewith: 122474

OR

☐ I hereby appoint Practitioner(s) named below as my/our attorney(s) or agent(s) with respect to the patent identified above, and to transact all business in the United States Patent and Trademark Office connected therewith:

| Practitioner(s) Name | Registration Number |
|---|---|
| | |
| | |
| | |
| | |

Please recognize or change the correspondence address for the above-identified patent to:

☒ The address associated with the above-identified Customer Number.

OR

☐ The address associated with the Customer Number identified in the box at right:

OR

| | | | | | |
|---|---|---|---|---|---|
| ☐ Firm or Individual Name | | | | | |
| Address | | | | | |
| City | | State | | Zip | |
| Country | | | | | |
| Telephone | | Email | | | |

I am the:

☐ Applicant.

OR

☒ Patent owner.

*Statement under 37 CFR 3.73(c) (Form PTO/AIA/96) submitted herewith or filed on* _____.

**SIGNATURE of Applicant or Patent Owner**

| | | | |
|---|---|---|---|
| Signature | [signature] | Date | 04/19/2024 |
| Name | Alan Gahng | Telephone | |
| Title and Company | General Counsel, Serendia LLC | | |

NOTE: Signatures of all the applicants or patent owners of the entire interest or their representative(s) are required. If more than one signature is required, submit multiple forms, check the box below, and identify the total number of forms submitted in the blank below.

☐ A total of _____ forms are submitted.

This collection of information is required by 37 CFR 1.31, 1.32, and 1.33. The information is required to obtain or retain a benefit by the public, which is to update (and by the USPTO to process) the file of a patent or reexamination proceeding. Confidentiality is governed by 35 U.S.C. 122 and 37 CFR 1.14. This collection is estimated to take 3 minutes to complete, including gathering, preparing, and submitting the completed application form to the USPTO. Time will vary depending upon the individual case. Any comments on the amount of time you require to complete this form and/or suggestions for reducing this burden, should be sent to the Chief Information Officer, U.S. Patent and Trademark Office, U.S. Department of Commerce, P.O. Box 1450, Alexandria, VA 22313-1450. DO NOT SEND FEES OR COMPLETED FORMS TO THIS ADDRESS. **SEND TO: Commissioner for Patents, P.O. Box 1450, Alexandria, VA 22313-1450.**

*If you need assistance in completing the form, call 1-800-PTO-9199 and select option 2.*

# Privacy Act Statement

The **Privacy Act of 1974 (P.L. 93-579)** requires that you be given certain information in connection with your submission of the attached form related to a patent application or patent. Accordingly, pursuant to the requirements of the Act, please be advised that: (1) the general authority for the collection of this information is 35 U.S.C. 2(b)(2); (2) furnishing of the information solicited is voluntary; and (3) the principal purpose for which the information is used by the U.S. Patent and Trademark Office is to process and/or examine your submission related to a patent application or patent. If you do not furnish the requested information, the U.S. Patent and Trademark Office may not be able to process and/or examine your submission, which may result in termination of proceedings or abandonment of the application or expiration of the patent.

The information provided by you in this form will be subject to the following routine uses:

1. The information on this form will be treated confidentially to the extent allowed under the Freedom of Information Act (5 U.S.C. 552) and the Privacy Act (5 U.S.C 552a). Records from this system of records may be disclosed to the Department of Justice to determine whether disclosure of these records is required by the Freedom of Information Act.
2. A record from this system of records may be disclosed, as a routine use, in the course of presenting evidence to a court, magistrate, or administrative tribunal, including disclosures to opposing counsel in the course of settlement negotiations.
3. A record in this system of records may be disclosed, as a routine use, to a Member of Congress submitting a request involving an individual, to whom the record pertains, when the individual has requested assistance from the Member with respect to the subject matter of the record.
4. A record in this system of records may be disclosed, as a routine use, to a contractor of the Agency having need for the information in order to perform a contract. Recipients of information shall be required to comply with the requirements of the Privacy Act of 1974, as amended, pursuant to 5 U.S.C. 552a(m).
5. A record related to an International Application filed under the Patent Cooperation Treaty in this system of records may be disclosed, as a routine use, to the International Bureau of the World Intellectual Property Organization, pursuant to the Patent Cooperation Treaty.
6. A record in this system of records may be disclosed, as a routine use, to another federal agency for purposes of National Security review (35 U.S.C. 181) and for review pursuant to the Atomic Energy Act (42 U.S.C. 218(c)).
7. A record from this system of records may be disclosed, as a routine use, to the Administrator, General Services, or his/her designee, during an inspection of records conducted by GSA as part of that agency's responsibility to recommend improvements in records management practices and programs, under authority of 44 U.S.C. 2904 and 2906. Such disclosure shall be made in accordance with the GSA regulations governing inspection of records for this purpose, and any other relevant (*i.e.*, GSA or Commerce) directive. Such disclosure shall not be used to make determinations about individuals.
8. A record from this system of records may be disclosed, as a routine use, to the public after either publication of the application pursuant to 35 U.S.C. 122(b) or issuance of a patent pursuant to 35 U.S.C. 151. Further, a record may be disclosed, subject to the limitations of 37 CFR 1.14, as a routine use, to the public if the record was filed in an application which became abandoned or in which the proceedings were terminated and which application is referenced by either a published application, an application open to public inspection or an issued patent.
9. A record from this system of records may be disclosed, as a routine use, to a Federal, State, or local law enforcement agency, if the USPTO becomes aware of a violation or potential violation of law or regulation.

UNITED STATES
PATENT AND TRADEMARK OFFICE

P.O. Box 1450
Alexandria, VA 22313 - 1450
www.uspto.gov

# ELECTRONIC ACKNOWLEDGEMENT RECEIPT

| APPLICATION # | RECEIPT DATE / TIME | ATTORNEY DOCKET # |
|---|---|---|
| **15/096,686** | **04/27/2024 09:05:34 PM Z ET** | **YS-0073-SR-SE** |

## Title of Invention

METHOD, SYSTEM, AND APPARATUS FOR DERMATOLOGICAL TREATMENT

## Application Information

| | | | |
|---|---|---|---|
| APPLICATION TYPE | Utility - Nonprovisional Application under 35 USC 111(a) | PATENT # | 9775774 |
| CONFIRMATION # | 2620 | FILED BY | Robert Blasi |
| PATENT CENTER # | 65276476 | FILING DATE | 04/12/2016 |
| CUSTOMER # | 82727 | FIRST NAMED INVENTOR | Jongju Na |
| CORRESPONDENCE ADDRESS | - | AUTHORIZED BY | - |

## Documents

**TOTAL DOCUMENTS: 1**

| DOCUMENT | PAGES | DESCRIPTION | SIZE (KB) |
|---|---|---|---|
| 2024-04-27_FINAL_Change_of_fee_address.pdf | 2 | Change of Address | 256 KB |

## Digest

| DOCUMENT | MESSAGE DIGEST(SHA-512) |
|---|---|
| 2024-04-27_FINAL_Change_of_fee_address.pdf | C2A21D013DDE0E70EBF62148F640F3567CA0A63CE69116831DD2ADEF73592DBBFA3EEAAE644ADB9360B578BFD8F4EDBDF0C3E7D3FADDFC3D4151F225F5968613 |

This Acknowledgement Receipt evidences receipt on the noted date by the USPTO of the indicated documents, characterized by the applicant, and including page counts, where applicable. It serves as evidence of receipt similar to a Post Card, as described in MPEP 503.

**New Applications Under 35 U.S.C. 111**

If a new application is being filed and the application includes the necessary components for filing date (see 37 CFR 1.53(b)-(d) and MPEP 506), a Filing Receipt (37 CFR 1.54) will be issued in due course and the date shown on this Acknowledgement Receipt will establish the filing date of the application

**National Stage of an International Application under 35 U.S.C. 371**

If a timely submission to enter the national stage of an international application is compliant with the conditions of 35 U.S.C. 371 and other applicable requirements a Form PCT/DO/EO/903 indicating acceptance of the application as a national stage submission under 35 U.S.C. 371 will be issued in addition to the Filing Receipt, in due course.

**New International Application Filed with the USPTO as a Receiving Office**

If a new international application is being filed and the international application includes the necessary components for an international filing date (see PCT Article 11 and MPEP 1810), a Notification of the International Application Number and of the International Filing Date (Form PCT/RO/105) will be issued in due course, subject to prescriptions concerning national security, and the date shown on this Acknowledgement Receipt will establish the international filing date of the application.

Doc Code: MFEE.C.AD
Document Description: Maintenance Fee Address Change

PTO/AIA/47 (11-21)
Approved for use through 11/30/2024. OMB 0651-0016
U.S. Patent and Trademark Office; U.S. DEPARTMENT OF COMMERCE
Under the Paperwork Reduction Act of 1995, no person is required to respond to a collection of information unless it displays a valid OMB control number.

# "FEE ADDRESS" INDICATION FORM

**Address to:**
**Mail Stop Maintenance Fee**
**Director of the United States Patent and Trademark Office**
**P.O. Box 1450**
**Alexandria, VA 22313-1450**

**-OR-**

**Fax to:**
**571-273-6500**

**INSTRUCTIONS:** The issue fee must have been paid for the application(s) listed on this form. In addition, only an address represented by a Customer Number can be established as the fee address for maintenance fee purposes (hereafter, fee address). A fee address should be established when correspondence related to maintenance fees should be mailed to a different address than the correspondence address for the application.

**When to check the first box below:** If you have a Customer Number to represent the fee address.

**When to check the second box below:** If you have no Customer Number representing the desired fee address, in which case a completed Request for Customer Number (PTO/SB/125) must be attached to this form. For more information on Customer Numbers, see the Manual of Patent Examining Procedure (MPEP) § 403.

For the following listed application(s), please recognize as the "Fee Address" under the provisions of 37 CFR 1.363 the address associated with:

☑ Customer Number: 122474

***OR***

☐ The attached Request for Customer Number form (PTO/SB/125)

| PATENT NUMBER (if known) | APPLICATION NUMBER |
|---|---|
| 9,775,774 | |

Completed by (check one):

☐ Applicant/Inventor

☑ Attorney or Agent of record 50,389 (Reg. No.)

☐ Assignee of record of the entire interest. See 37 CFR 3.71. Statement under 37 CFR 3.73(c) (Form PTO/AIA/96) is enclosed or was filed on _____ (Date)

/Robert S. Blasi/
Signature

Robert S. Blasi, Esq.
Typed or printed name

(857)247-8333
Requester's telephone number

April 27, 2024
Date

NOTE: Signatures of all the inventors or assignees of record of the entire interest or their representative(s) are required. If the assignee is a juristic entity, this form must be signed by a patent practitioner (attorney or agent) of record. Submit multiple forms if more than one signature is required, see below*.

☐ *Total of _____ forms are submitted

A Federal agency may not conduct or sponsor, and a person is not required to respond to, nor shall a person be subject to a penalty for failure to comply with an information collection subject to the requirements of the Paperwork Reduction Act of 1995, unless the information collection has a currently valid OMB Control Number. The OMB Control Number for this information collection is 0651-0016. Public burden for this form is estimated to average 5 minutes per response, including the time for reviewing instructions, searching existing data sources, gathering and maintaining the data needed, and completing and reviewing the information collection. Send comments regarding this burden estimate or any other aspect of this information collection, including suggestions for reducing this burden to the Chief Administrative Officer, United States Patent and Trademark Office, P.O. Box 1450, Alexandria, VA 22313-1450 or email InformationCollection@uspto.gov. **DO NOT SEND FEES OR COMPLETED FORMS TO THIS ADDRESS.** SEND TO: Commissioner for Patents, P.O. Box 1450, Alexandria, VA 22313-1450.

*If you need assistance in completing the form, call 1-800-PTO-9199 and select option 2.*

## Privacy Act Statement

The Privacy Act of 1974 (P.L. 93-579) requires that you be given certain information in connection with your submission of the attached form related to a patent application or patent. The United States Patent and Trademark Office (USPTO) collects the information in this record under authority of 35 U.S.C. 2. The USPTO's system of records is used to manage all applicant and owner information including name, citizenship, residence, post office address, and other information with respect to inventors and their legal representatives pertaining to the applicant's/owner's activities in connection with the invention for which a patent is sought or has been granted. The applicable Privacy Act System of Records Notice for the information collected in this form is COMMERCE/PAT-TM-7 Patent Application Files, available in the Federal Register at 78 FR 19243 (March 29, 2013). https://www.govinfo.gov/content/pkg/FR-2013-03-29/pdf/2013-07341.pdf

Routine uses of the information in this record may include disclosure to: 1) law enforcement, in the event that the system of records indicates a violation or potential violation of law; 2) a Federal, state, local, or international agency, in response to its request; 3) a contractor of the USPTO having need for the information in order to perform a contract; 4) the Department of Justice for determination of whether the Freedom of Information Act (FOIA) requires disclosure of the record; 5) a Member of Congress submitting a request involving an individual to whom the record pertains, when the individual has requested the Member's assistance with respect to the subject matter of the record; 6) a court, magistrate, or administrative tribunal, in the course of presenting evidence, including disclosures to opposing counsel in the course of settlement negotiations; 7) the Administrator, General Services Administration (GSA), or their designee, during an inspection of records conducted by GSA under authority of 44 U.S.C. 2904 and 2906, in accordance with the GSA regulations and any other relevant (i.e., GSA or Commerce) directive, where such disclosure shall not be used to make determinations about individuals; 8) another federal agency for purposes of National Security review (35 U.S.C. 181) and for review pursuant to the Atomic Energy Act (42 U.S.C. 218(c)); 9) the Office of Personnel Management (OPM) for personnel research purposes; and 9) the Office of Management and Budget (OMB) for legislative coordination and clearance.

If you do not furnish the information requested on this form, the USPTO may not be able to process and/or examine your submission, which may result in termination of proceedings, abandonment of the application, and/or expiration of the patent.

## Additional Uses

Additional USPTO uses of the information in this record may include disclosure to: 1) the International Bureau of the World Intellectual Property Organization, if the record is related to an international application filed under the Patent Cooperation Treaty; 2) the public i) after publication of the application pursuant to 35 U.S.C. 122(b), ii) after issuance of a patent pursuant to 35 U.S.C. 151, iii) if the record was filed in an application which became abandoned or in which the proceedings were terminated and which application is referenced by either a published application, an application open to public inspections, or an issued patent, or iv) without publication of the application or patent under the specific circumstances provided for by 37 CFR 1.14(a)(1)(v)-(vii); and/or 3) the National Archives and Records Administration, for inspection of records.
https://www.govinfo.gov/content/pkg/FR-2013-03-29pdf/2013-07341.pdf

UNITED STATES PATENT AND TRADEMARK OFFICE

UNITED STATES DEPARTMENT OF COMMERCE
United States Patent and Trademark Office
Address: COMMISSIONER FOR PATENTS
P.O. Box 1450
Alexandria, Virginia 22313-1450
www.uspto.gov

| APPLICATION NUMBER | FILING OR 371(C) DATE | FIRST NAMED APPLICANT | ATTY. DOCKET NO./TITLE |
|---|---|---|---|
| 15/096,686 | 04/12/2016 | Jongju Na | YS-0073-SR-SE |

**CONFIRMATION NO. 2620**

**IMPROPER CPOA LETTER**

82727
KILE PARK REED & HOUTTEMAN PLLC
JAE Y PARK
1101 30th Street, N.W.
Suite 500
Washington, DC 20007

*OC000000071889753*

Date Mailed: 04/30/2024

## NOTICE REGARDING POWER OF ATTORNEY

This is in response to the power of attorney filed 04/19/2024. The power of attorney in this application is not accepted for the reason(s) listed below:

- The revocation is not signed by the applicant or the assignee of the entire interest.

/qnguyen/

Office of Data Management, Application Assistance Unit (571) 272-4000, or (571) 272-4200, or 1-888-786-0101

122474
Danielson Legal LLC
ATTN: Patent Administrator
1531 32nd Ave S, Ste 102
Fargo, ND 58103-5911
UNITED STATES

TO: email@kilepark.com,info@kilepark.com,jpark@kilepark.com
FROM: noreply@uspto.gov
CC: patentcenter_eofficeaction@uspto.gov
SUBJECT: USPTO: Patent Electronic System - Correspondence Notification for Customer Number 82727

Tue Apr 30 05:10:01 EDT 2024

Dear Patent Center Customer:

Correspondence Address:

KILE PARK REED &HOUTTEMAN PLLC
JAE Y PARK
1101 30th Street, N.W.
Suite 500
Washington,DISTRICT OF COLUMBIA,20007
UNITED STATES

This is a courtesy notification regarding the following USPTO patent application(s) associated with your Customer Number, 82727, that have new outgoing correspondence. This correspondence is now available for viewing in Patent Center.

The official date of notification of the outgoing correspondence will be indicated on the form (e.g., PTOL-90) accompanying the correspondence.

Disclaimer:
The list of documents shown below are provided as a courtesy and is not part of the official file wrapper. The content of the images shown in the Image File Wrapper is the official record.

| Application | Document | Mailroom Date | Attorney Docket No. |
|---|---|---|---|
| 15096686 | N572 | 04/30/2024 | YS-0073-SR-SE |

To view your correspondence online, please sign in to Patent Center and then select Workbench/View correspondence. To update your email address(es), select Manage/Manage customer numbers.

If you have any questions, please contact the Patent Electronic Business Center (EBC) at ebc@uspto.gov or 866-217-9197 Monday – Friday, 6 a.m. to midnight ET.

Please do not reply to this email as it was sent from an unmonitored mailbox.

Sincerely,

The Patent Center Team

UNITED STATES
PATENT AND TRADEMARK OFFICE

P.O. Box 1450
Alexandria, VA 22313 - 1450
www.uspto.gov

# ELECTRONIC ACKNOWLEDGEMENT RECEIPT

| APPLICATION # | RECEIPT DATE / TIME | ATTORNEY DOCKET # |
|---|---|---|
| **15/096,686** | **05/19/2024 08:29:52 PM Z ET** | **YS-0073-SR-SE** |

## Title of Invention

METHOD, SYSTEM, AND APPARATUS FOR DERMATOLOGICAL TREATMENT

## Application Information

| | | | |
|---|---|---|---|
| APPLICATION TYPE | Utility - Nonprovisional Application under 35 USC 111(a) | PATENT # | 9775774 |
| CONFIRMATION # | 2620 | FILED BY | Robert Blasi |
| PATENT CENTER # | 65585639 | FILING DATE | 04/12/2016 |
| CUSTOMER # | 122474 | FIRST NAMED INVENTOR | Jongju Na |
| CORRESPONDENCE ADDRESS | - | AUTHORIZED BY | - |

## Documents

**TOTAL DOCUMENTS: 2**

| DOCUMENT | PAGES | DESCRIPTION | SIZE (KB) |
|---|---|---|---|
| 2024-04-19_FINAL_3.73_stmt_US9775774.pdf | 3 | Assignee showing of ownership per 37 CFR 3.73 | 221 KB |
| 2024-04-24_FC_Exec_DL_POA.pdf | 2 | Power of Attorney | 588 KB |

Warning: The attached file contains comments or annotations. Comments are not recommended and may cause processing problems with the document.

## Digest

| DOCUMENT | MESSAGE DIGEST(SHA-512) |
|---|---|

| | |
|---|---|
| 2024-04-19_FINAL_3.73_stmt_US9775774.pdf | A28B6BF74D2673822E20BF18A2EDD837103F5FFC3657BCE369CA7F79BB6DAE2725763B41F76A4FAA664CF587D3EFD5335D17557A379BF19E76778B7FA8F244E0 |
| 2024-04-24_FC_Exec_DL_POA.pdf | 804F739B6633EEB7FB1CCBB89F1CB3E6C6229115DF19C0A4652FD0809E39085EBDD8476C198A2F112D41B3994BDEF8BBEC26825FDDDEAC73ABE603DA301A23FF |

This Acknowledgement Receipt evidences receipt on the noted date by the USPTO of the indicated documents, characterized by the applicant, and including page counts, where applicable. It serves as evidence of receipt similar to a Post Card, as described in MPEP 503.

**New Applications Under 35 U.S.C. 111**

If a new application is being filed and the application includes the necessary components for filing date (see 37 CFR 1.53(b)-(d) and MPEP 506), a Filing Receipt (37 CFR 1.54) will be issued in due course and the date shown on this Acknowledgement Receipt will establish the filing date of the application

**National Stage of an International Application under 35 U.S.C. 371**

If a timely submission to enter the national stage of an international application is compliant with the conditions of 35 U.S.C. 371 and other applicable requirements a Form PCT/DO/EO/903 indicating acceptance of the application as a national stage submission under 35 U.S.C. 371 will be issued in addition to the Filing Receipt, in due course.

**New International Application Filed with the USPTO as a Receiving Office**

If a new international application is being filed and the international application includes the necessary components for an international filing date (see PCT Article 11 and MPEP 1810), a Notification of the International Application Number and of the International Filing Date (Form PCT/RO/105) will be issued in due course, subject to prescriptions concerning national security, and the date shown on this Acknowledgement Receipt will establish the international filing date of the application.

PTO/AIA/96 (11-23)
Approved for use through 05/31/2024. OMB 0651-0031
U.S. Patent and Trademark Office; U.S. DEPARTMENT OF COMMERCE
Under the Paperwork Reduction Act of 1995, no persons are required to respond to a collection of information unless it displays a valid OMB control number.

# STATEMENT UNDER 37 CFR 3.73(c)

First Named Inventor/Patent Owner: Serendia LLC

Application No./Patent No.: 9,775,774 Filed/Issue Date: Oct. 3, 2017

Titled: Method, system, and apparatus for dermatological treatment

Serendia LLC, a limited liability company

(Name of Assignee) (Type of Assignee, e.g., corporation, partnership, university, government agency, etc.)

states that, for the patent application/patent identified above, it is (choose **one** of options 1, 2, 3 or 4 below):

1. ☑ The assignee of the entire right, title, and interest.

2. ☐ An assignee of less than the entire right, title, and interest (check applicable box):

   ☐ The extent (by percentage) of its ownership interest is _____%. Additional Statement(s) by the owners holding the balance of the interest must be submitted to account for 100% of the ownership interest.

   ☐ There are unspecified percentages of ownership. The other parties, including inventors, who together own the entire right, title and interest are:

   Additional Statement(s) by the owner(s) holding the balance of the interest must be submitted to account for the entire right, title, and interest.

3. ☐ The assignee of an undivided interest in the entirety (a complete assignment from one of the joint inventors was made). The other parties, including inventors, who together own the entire right, title, and interest are:

   Additional Statement(s) by the owner(s) holding the balance of the interest must be submitted to account for the entire right, title, and interest.

4. ☐ The recipient, via a court proceeding or the like (*e.g.*, bankruptcy, probate), of an undivided interest in the entirety (a complete transfer of ownership interest was made). The certified document(s) showing the transfer is attached.

The interest identified in option 1, 2 or 3 above (not option 4) is evidenced by either (choose **one** of options A or B below):

A. ☐ An assignment from the inventor(s) of the patent application/patent identified above. The assignment was recorded in the United States Patent and Trademark Office at Reel _____, Frame _____, or for which a copy thereof is attached*.

B. ☑ A chain of title from the inventor(s), of the patent application/patent identified above, to the current assignee as follows:

1. From: Jongju Na To: Viol Co., Ltd.

   The document was recorded in the United States Patent and Trademark Office at
   Reel 045935, Frame 0155, or for which a copy thereof is attached*.

2. From: Viol Co., Ltd. To: Serendia LLC

   The document was recorded in the United States Patent and Trademark Office at
   Reel 054503, Frame 0344, or for which a copy thereof is attached*.



A Federal agency may not conduct or sponsor, and a person is not required to respond to, nor shall a person be subject to a penalty for failure to comply with an information collection subject to the requirements of the Paperwork Reduction Act of 1995, unless the information collection has a currently valid OMB Control Number. The OMB Control Number for this information collection is 0651-0031. Public burden for this form is estimated to average 12 minutes per response, including the time for reviewing instructions, searching existing data sources, gathering and maintaining the data needed, and completing and reviewing the information collection. Send comments regarding this burden estimate or any other aspect of this information collection, including suggestions for reducing this burden to the Chief Administrative Officer, United States Patent and Trademark Office, P.O. Box 1450, Alexandria, VA 22313-1450 or email InformationCollection@uspto.gov. DO NOT SEND FEES OR COMPLETED FORMS TO THIS ADDRESS. **SEND TO: Commissioner for Patents, P.O. Box 1450, Alexandria, VA 22313-1450.**

*If you need assistance in completing the form, call 1-800-PTO-9199 and select option 2.*

Under the Paperwork Reduction Act of 1995, no persons are required to respond to a collection of information unless it displays a valid OMB control number.

# STATEMENT UNDER 37 CFR 3.73(c)

3. From: _____ To: _____

The document was recorded in the United States Patent and Trademark Office at

Reel _____, Frame _____, or for which a copy thereof is attached*.

4. From: _____ To: _____

The document was recorded in the United States Patent and Trademark Office at

Reel _____, Frame _____, or for which a copy thereof is attached*.

5. From: _____ To: _____

The document was recorded in the United States Patent and Trademark Office at

Reel _____, Frame _____, or for which a copy thereof is attached*.

6. From: _____ To: _____

The document was recorded in the United States Patent and Trademark Office at

Reel _____, Frame _____, or for which a copy thereof is attached*.

☐ Additional documents in the chain of title are listed on a supplemental sheet(s).

☐ *As required by 37 CFR 3.73(c)(1)(i), the documentary evidence of the chain of title from the original owner to the assignee was, or concurrently is being, submitted for recordation pursuant to 37 CFR 3.11.

[NOTE: A separate copy (i.e., a true copy of the original assignment document(s)) must be submitted to Assignment Division in accordance with 37 CFR Part 3, to record the assignment in the records of the USPTO. See MPEP 302.08]

The undersigned (whose title is supplied below) is authorized to act on behalf of the assignee.

| | |
|---|---|
| /Robert S. Blasi/ | Apr. 19, 2024 |
| Signature | Date |
| Robert S. Blasi, Esq. | 50,389 |
| Printed or Typed Name | Title or Registration Number |

# Privacy Act Statement

The Privacy Act of 1974 (P.L. 93-579) requires that you be given certain information in connection with your submission of the attached form related to a patent application or patent. The United States Patent and Trademark Office (USPTO) collects the information in this record under authority of 35 U.S.C. 2. The USPTO's system of records is used to manage all applicant and owner information including name, citizenship, residence, post office address, and other information with respect to inventors and their legal representatives pertaining to the applicant's/owner's activities in connection with the invention for which a patent is sought or has been granted. The applicable Privacy Act System of Records Notice for the information collected in this form is COMMERCE/PAT-TM-7 Patent Application Files, available in the Federal Register at 78 FR 19243 (March 29, 2013). https://www.govinfo.gov/content/pkg/FR-2013-03-29/pdf/2013-07341.pdf

Routine uses of the information in this record may include disclosure to:

1) law enforcement, in the event that the system of records indicates a violation or potential violation of law;

2) a federal, state, local, or international agency, in response to its request;

3) a contractor of the USPTO having need for the information in order to perform a contract;

4) the Department of Justice for determination of whether the Freedom of Information Act (FOIA) requires disclosure of the record;

5) a Member of Congress submitting a request involving an individual to whom the record pertains, when the individual has requested the Member's assistance with respect to the subject matter of the record;

6) a court, magistrate, or administrative tribunal, in the course of presenting evidence, including disclosures to opposing counsel in the course of settlement negotiations;

7) the Administrator, General Services Administration (GSA), or their designee, during an inspection of records conducted by GSA under authority of 44 U.S.C. 2904 and 2906, in accordance with the GSA regulations and any other relevant (i.e., GSA or Commerce) directive, where such disclosure shall not be used to make determinations about individuals;

8) another federal agency for purposes of National Security review (35 U.S.C. 181) and for review pursuant to the Atomic Energy Act (42 U.S.C. 218(c));

9) the Office of Personnel Management (OPM) for personnel research purposes; and

10) the Office of Management and Budget (OMB) for legislative coordination and clearance.

If you do not furnish the information requested on this form, the USPTO may not be able to process and/or examine your submission, which may result in termination of proceedings, abandonment of the application, and/or expiration of the patent.

PTO/AIA/80 (07-17)
Approved for use through 09/30/2025. OMB 0651-0035
U.S. Patent and Trademark Office; U.S. DEPARTMENT OF COMMERCE
Under the Paperwork Reduction Act of 1995, no person is required to respond to a collection of information unless it displays a valid OMB control number

# POWER OF ATTORNEY TO PROSECUTE APPLICATIONS BEFORE THE USPTO

I hereby revoke all previous powers of attorney given in the application identified in the attached statement under 37 CFR 3.73(c).

I hereby appoint:

[XX] Practitioners associated with Customer Number: 122474

**OR**

[ ] Practitioner(s) named below (if more than ten patent practitioners are to be named, then a customer number must be used):

| Name | Registration Number |
|---|---|
| | |
| | |
| | |
| | |
| | |

| Name | Registration Number |
|---|---|
| | |
| | |
| | |
| | |
| | |

As attorney(s) or agent(s) to represent the undersigned before the United States Patent and Trademark Office (USPTO) in connection with any and all patent applications assigned only to the undersigned according to the USPTO assignment records or assignment documents attached to this form in accordance with 37 CFR 3.73(c).

Please change the correspondence address for the application identified in the attached statement under 37 CFR 3.73(c) to:

[XX] The address associated with Customer Number: 122474

**OR**

[ ]

| | | |
|---|---|---|
| Firm or individual name | | |
| Address | | |
| City | State | Zip |
| Country | | |
| Telephone | Email | |

Assignee name and address: Serendia LLC, 23792 Rockfield Blvd, Ste 285, Lake Forest, CA 92630

**A copy of this form, together with a statement under 37 CFR 3.73(c) (Form PTO/AIA/96 or equivalent) is required to be filed in each application in which this form is used. The statement under 37 CFR 3.73(c) may be completed by one of the practitioners appointed in this form, and must identify the application in which this Power of Attorney is to be filed.**

**SIGNATURE of Assignee of Record**

The individual whose signature and title is supplied below is authorized to act on behalf of the assignee.

| | |
|---|---|
| Signature **/Jongju Na/** | Date **Apr 25, 2024** |
| Name Dr. Jongju Na | Telephone **949.606.3885** |
| Title Chief Executive Officer | |

A Federal agency may not conduct or sponsor, and a person is not required to respond to, nor shall a person be subject to a penalty for failure to comply with an information collection subject to the requirements of the Paperwork Reduction Act of 1995, unless the information collection has a currently valid OMB Control Number. The OMB Control Number for this information collection is 0651-0035. Public burden for this form is estimated to average 18 minutes per response, including the time for reviewing instructions, searching existing data sources, gathering and maintaining the data needed, and completing and reviewing the information collection. Send comments regarding this burden estimate or any other aspect of this information collection, including suggestions for reducing this burden to the Chief Administrative Officer, United States Patent and Trademark Office, P.O. Box 1450, Alexandria, VA 22313-1450 or email InformationCollection@uspto.gov. **DO NOT SEND FEES OR COMPLETED FORMS TO THIS ADDRESS.** If filing this completed form by mail, send to: **Commissioner for Patents, P.O. Box 1450, Alexandria, VA 22313-1450.**

*If you need assistance in completing the form, call 1-800-PTO-9199 and select option 2.*

# Privacy Act Statement

The Privacy Act of 1974 (P.L. 93-579) requires that you be given certain information in connection with your submission of the attached form related to a patent application or patent. The United States Patent and Trademark Office (USPTO) collects the information in this record under authority of 35 U.S.C. 2. The USPTO's system of records is used to manage all applicant and owner information including name, citizenship, residence, post office address, and other information with respect to inventors and their legal representatives pertaining to the applicant's/owner's activities in connection with the invention for which a patent is sought or has been granted. The applicable Privacy Act System of Records Notice for the information collected in this form is COMMERCE/PAT-TM-7 Patent Application Files, available in the Federal Register at 78 FR 19243 (March 29, 2013). https://www.govinfo.gov/content/pkg/FR-2013-03-29/pdf/2013-07341.pdf

Routine uses of the information in this record may include disclosure to: 1) law enforcement, in the event that the system of records indicates a violation or potential violation of law; 2) a Federal, state, local, or international agency, in response to its request; 3) a contractor of the USPTO having need for the information in order to perform a contract; 4) the Department of Justice for determination of whether the Freedom of Information Act (FOIA) requires disclosure of the record; 5) a Member of Congress submitting a request involving an individual to whom the record pertains, when the individual has requested the Member's assistance with respect to the subject matter of the record; 6) a court, magistrate, or administrative tribunal, in the course of presenting evidence, including disclosures to opposing counsel in the course of settlement negotiations; 7) the Administrator, General Services Administration (GSA), or their designee, during an inspection of records conducted by GSA under authority of 44 U.S.C. 2904 and 2906, in accordance with the GSA regulations and any other relevant (i.e., GSA or Commerce) directive, where such disclosure shall not be used to make determinations about individuals; 8) another federal agency for purposes of National Security review (35 U.S.C. 181) and for review pursuant to the Atomic Energy Act (42 U.S.C. 218(c)); 9) the Office of Personnel Management (OPM) for personnel research purposes; and 9) the Office of Management and Budget (OMB) for legislative coordination and clearance.

If you do not furnish the information requested on this form, the USPTO may not be able to process and/or examine your submission, which may result in termination of proceedings, abandonment of the application, and/or expiration of the patent.

# Additional Uses

Additional USPTO uses of the information in this record may include disclosure to: 1) the International Bureau of the World Intellectual Property Organization, if the record is related to an international application filed under the Patent Cooperation Treaty; 2) the public i) after publication of the application pursuant to 35 U.S.C. 122(b), ii) after issuance of a patent pursuant to 35 U.S.C. 151, iii) if the record was filed in an application which became abandoned or in which the proceedings were terminated and which application is referenced by either a published application, an application open to public inspections, or an issued patent, or iv) without publication of the application or patent under the specific circumstances provided for by 37 CFR 1.14(a)(1)(v)-(vii); and/or 3) the National Archives and Records Administration, for inspection of records.

UNITED STATES PATENT AND TRADEMARK OFFICE

UNITED STATES DEPARTMENT OF COMMERCE
United States Patent and Trademark Office
Address: COMMISSIONER FOR PATENTS
P.O. Box 1450
Alexandria, Virginia 22313-1450
www.uspto.gov

| APPLICATION NUMBER | FILING OR 371(C) DATE | FIRST NAMED APPLICANT | ATTY. DOCKET NO./TITLE |
|---|---|---|---|
| 15/096,686 | 04/12/2016 | Jongju Na | YS-0073-SR-SE |

**CONFIRMATION NO. 2620**

122474
Danielson Legal LLC
ATTN: Patent Administrator
1531 32nd Ave S, Ste 102
Fargo, ND 58103-5911

**POA ACCEPTANCE LETTER**

*OC000000074011289*

Date Mailed: 06/17/2024

## NOTICE OF ACCEPTANCE OF POWER OF ATTORNEY

This is in response to the Power of Attorney filed 05/19/2024.

The Power of Attorney in this application is accepted. Correspondence in this application will be mailed to the above address as provided by 37 CFR 1.33.

Questions about the contents of this notice and the requirements it sets forth should be directed to the Office of Data Management, Application Assistance Unit, at **(571) 272-4000** or **(571) 272-4200** or **1-888-786-0101**.

/cnguyen/

UNITED STATES PATENT AND TRADEMARK OFFICE

UNITED STATES DEPARTMENT OF COMMERCE
United States Patent and Trademark Office
Address: COMMISSIONER FOR PATENTS
P.O. Box 1450
Alexandria, Virginia 22313-1450
www.uspto.gov

| APPLICATION NUMBER | FILING OR 371(C) DATE | FIRST NAMED APPLICANT | ATTY. DOCKET NO./TITLE |
|---|---|---|---|
| 15/096,686 | 04/12/2016 | Jongju Na | YS-0073-SR-SE |

**CONFIRMATION NO. 2620**

122474
Danielson Legal LLC
ATTN: Patent Administrator
1531 32nd Ave S, Ste 102
Fargo, ND 58103-5911

**POWER OF ATTORNEY NOTICE**

*OC000000074011226*

Date Mailed: 06/17/2024

## NOTICE REGARDING CHANGE OF POWER OF ATTORNEY

This is in response to the Power of Attorney filed 05/19/2024.

- The Power of Attorney to you in this application has been revoked by the assignee who has intervened as provided by 37 CFR 3.71. Future correspondence will be mailed to the new address of record(37 CFR 1.33).

Questions about the contents of this notice and the requirements it sets forth should be directed to the Office of Data Management, Application Assistance Unit, at **(571) 272-4000** or **(571) 272-4200** or **1-888-786-0101**.

/cnguyen/

TO: patentadmin@danielsonlegal.com,USPTO@dockettrak.com
FROM: noreply@uspto.gov
CC: patentcenter_eofficeaction@uspto.gov
SUBJECT: USPTO: Patent Electronic System - Correspondence Notification for Customer Number 122474

Mon Jun 17 05:00:16 EDT 2024

Dear Patent Center Customer:

Correspondence Address:

Danielson Legal LLC
ATTN: Patent Administrator
1531 32nd Ave S, Ste 102
Fargo,NORTH DAKOTA,58103-5911
UNITED STATES

This is a courtesy notification regarding the following USPTO patent application(s) associated with your Customer Number, 122474, that have new outgoing correspondence. This correspondence is now available for viewing in Patent Center.

The official date of notification of the outgoing correspondence will be indicated on the form (e.g., PTOL-90) accompanying the correspondence.

Disclaimer:
The list of documents shown below are provided as a courtesy and is not part of the official file wrapper. The content of the images shown in the Image File Wrapper is the official record.

| Application | Document | Mailroom Date | Attorney Docket No. |
|---|---|---|---|
| 15096686 | N570 | 06/17/2024 | YS-0073-SR-SE |
| 15096686 | N570 | 06/17/2024 | YS-0073-SR-SE |

To view your correspondence online, please sign in to Patent Center and then select Workbench/View correspondence. To update your email address(es), select Manage/Manage customer numbers.

If you have any questions, please contact the Patent Electronic Business Center (EBC) at ebc@uspto.gov or 866-217-9197 Monday – Friday, 6 a.m. to midnight ET.

Please do not reply to this email as it was sent from an unmonitored mailbox.

Sincerely,

The Patent Center Team

Trials@uspto.gov
571-272-7822

Paper 17
Date: July 22, 2024

UNITED STATES PATENT AND TRADEMARK OFFICE

---

BEFORE THE PATENT TRIAL AND APPEAL BOARD

---

JEISYS MEDICAL INC.,
Petitioner,

v.

SERENDIA, LLC,
Patent Owner.

---

IPR2024-00383
Patent 9,775,774 B2

---

Before SHERIDAN K. SNEDDEN, CARL M. DEFRANCO, and TINA E. HULSE, *Administrative Patent Judges.*

DEFRANCO, *Administrative Patent Judge.*

# DECISION
Granting Institution of *Inter Partes* Review
*35 U.S.C. § 314*

Serendia, LLC ("Serendia") is the owner of U.S. Patent No. 9,775,774 B2 (Ex. 1001, "the '774 patent"). Jeisys Medical Inc. ("Jeisys") and Ilooda Co., Ltd., ("Ilooda") filed a petition for *inter partes* review of claims 1–20 of the '774 patent. Paper 1 ("Pet."). Ilooda subsequently settled its dispute with Serendia, and we dismissed Ilooda as a petitioner. *See* Paper 14.

In due course, Serendia filed a preliminary response, including both public and confidential versions.[1] *See* Papers 11, 13, respectively ("Prelim. Resp."). With the preliminary response, Serendia submitted a statutory disclaimer of claims 1–12 and 15–20 of the '774 patent. Ex. 2105 (dated Apr. 19, 2024). As such, only claims 13 and 14 remain at issue in this proceeding. *See* 37 C.F.R. § 42.107(e).

Per our authorization, Jeisys filed a reply (Paper 15, "Pet. Reply"), and Serendia followed with a sur-reply (Paper 16, "PO Sur-reply"). Exercising our jurisdiction under 35 U.S.C. § 314(a), we institute *inter partes* review of claims 13 and 14, which are the only challenged claims remaining after Serendia's statutory disclaimer.

## I. BACKGROUND

### *A. Related Matters*

This is Jeisys's first (and only) petition challenging the '774 patent. However, another entity, Cartessa Aesthetics, LLC ("Cartessa"), filed an earlier petition in December 2021, which we denied. *See Cartessa Aesthetics, LLC v. Serendia, LLC*, IPR2022-00376, Paper 9 (PTAB June 27, 2022).

The '774 patent is also the subject of a proceeding before the International Trade Commission, filed March 1, 2023, and captioned *Certain*

[1] Unless otherwise noted, this decision refers to the public version.

*Dermatological Treatment Devices and Components Thereof*, No. 337-TA-1356 ("the ITC proceeding"). The respondents in the ITC proceeding include Cartessa, Jeisys, Ilooda, and numerous others. *See* Paper 6; *see also* Prelim. Resp. 5.

The '774 patent is also the subject of several federal district court actions, some of which are stayed pending the outcome of the ITC proceeding and some of which have been dismissed—

- *Serendia, LLC v. Cutera, Inc.*, No. 1:23-cv-00222 (D. Del.)
- *Serendia, LLC v. Cynosure, LLC*, No. 1:23-cv-00223 (D. Del.)
- *Serendia, LLC v. EndyMed Medical, Inc.*, No. 1:23-cv-00224 (D. Del.)
- *Serendia, LLC v. Lutronic Aesthetics, Inc.*, No. 1:23-cv-00225 (D. Del.) (dismissed Jan. 22, 2024)
- *Serendia, LLC v. Rohrer Aesthetics, Inc.*, No. 1:23-cv-00226 (D. Del.) (dismissed Oct. 20, 2023)
- *SynKloud Technologies, LLC v. Cartessa Aesthetics, LLC*, No. 2:21-cv-4423 (E.D.N.Y.) (dismissed Nov. 21, 2023)

*See* Paper 6.

*B. The '774 Patent*

The '774 patent relates to a system and method "used in treating dermatological tissue." Ex. 1001, 1:30–32. Figures 2A and 2B of the '774 patent, reproduced below, depict dermatological treatment apparatus 310.

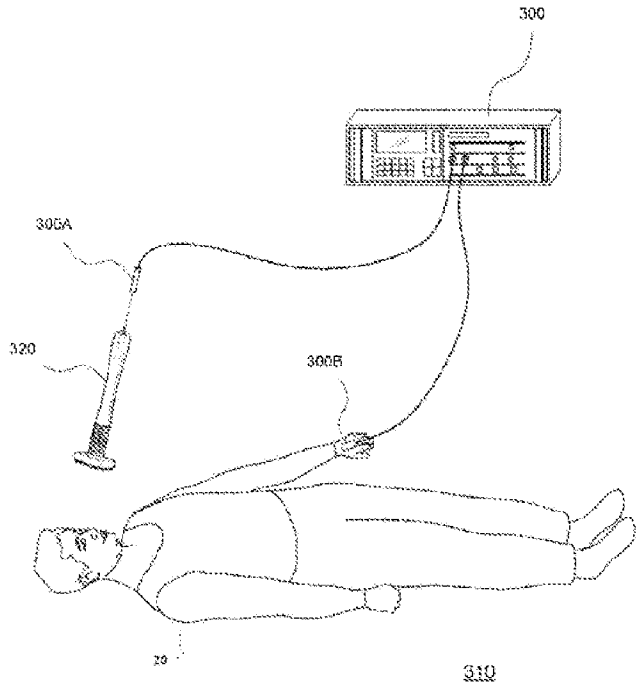


FIGURE 2A

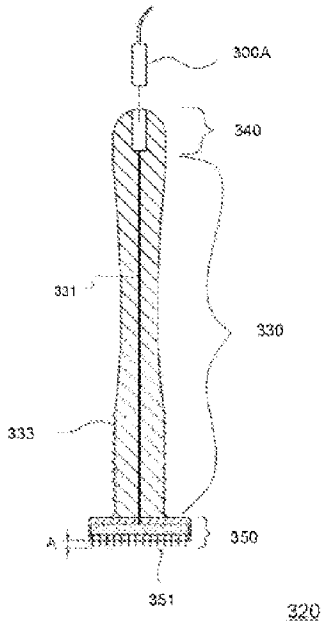


FIGURE 2B

As shown in Figures 2A and 2B, dermatological treatment apparatus 310 includes acupuncture device 320 and signal generator 300 electrically coupled to the device via one or more wires 300A. *Id.* at 3:38–45. Notably, acupuncture device 320 is provided with a plurality of acupuncture needles or pins 351. *Id.* at 3:45–54.

In operation, electrical signal generation system 300 produces electrical signals "to vibrate one or more pins 351 electrically coupled to the system 300 . . . [to] increase the micro-wound or cut formed in dermis by the pin 351." *Id.* at 3:55–60, 4:1–15. Pins 351 may be fixed in place, as depicted in Figure 2B above, or movable between a retracted and deployed position, i.e., extendable, as depicted in Figures 9C and 9D below. *See id.* at 2:28–33, 3:45–52, 10:31–11:31.

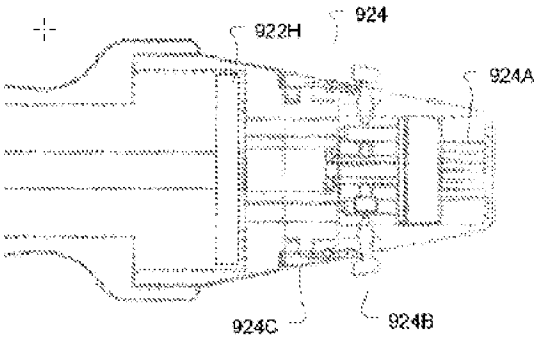


FIGURE 9C

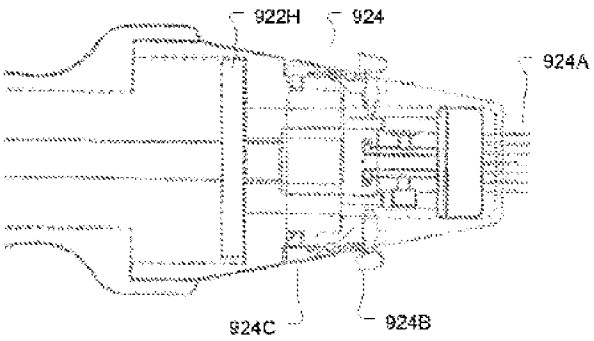


FIGURE 9D

As shown, Figure 9C depicts the dermatological treatment apparatus with the needles retracted and Figure 9D depicts the apparatus with the needles deployed.

*C. Challenged Claims*

As mentioned above, the only challenged claims remaining in the '774 patent are claims 13 and 14, which are reproduced below along with their base claims 11 and 12:

> 11. An apparatus for treating dermatological tissue, comprising:
>
> a device including a plurality of needles one of *extending or extendable a desired distance from a surface*, the desired distance selected to enable the plurality of needles to penetrate dermatological tissue; and
>
> a signal generator electrically coupled to the plurality of extended needles to produce pulsed radio frequency signals across the plurality of needles to affect dermatological tissue near the plurality of needles.
>
> 12. The apparatus for treating dermatological tissue of claim 11, wherein the device includes an end surface configured to be placed on or near dermatological tissue to be treated, the end surface including *a plurality of needles extendable a desired distance from the end surface*.

> 13. The apparatus for treating dermatological tissue of claim 12, further including a mechanism for causing *the plurality of the extendable needles to extend a desired distance from the end surface.*
>
> 14. The apparatus for treating dermatological tissue of claim 12, further including a motor coupled to the plurality of extendable needles that may be directed to cause *the plurality of the extendable needles to extend a desired distance from the end surface.*

Ex. 1001, 16:34–57 (emphases added).

*D. Asserted Challenges of Unpatentability*

| **Claims Challenged** | **35 U.S.C. §** | **Basis** |
|---|---|---|
| 13, 14 | 102 | Mehta[2] |
| 13, 14 | 103 | Mehta and Lee[3] |

In further support of these challenges, Jeisys relies on the declaration of Dany Bérubé, Ph.D. *See* Ex. 1003. Serendia submits rebuttal declarations from Peter Crosby (Ex. 2123) and Vince Thomas (Ex. 2124).

## II. DISCRETIONARY DENIAL UNDER *GENERAL PLASTIC*

In its preliminary response, Serendia argues that we should discretionarily deny the petition under the Board's precedential decisions in *General Plastic*[4] and *Valve*[5] because Jeisys has a "significant relationship" with Cartessa, the earlier petitioner of the '774 patent and a co-respondent with Jeisys in the related ITC proceeding. *See* Prelim. Resp. 7–12; PO Sur-

[2] US 8,608,737 B2, issued Dec. 17, 2013 (Ex. 1004, "Mehta").
[3] Korean Registered Utility Model No. KR20-0441552, published Aug. 25, 2008 (Exs. 1010 (original), 1011 (certified translation), "Lee").
[4] *General Plastic Indus. Co. v. Canon Kabushiki Kaisha*, IPR2016-01357, Paper 19 (PTAB Sept. 6, 2017) (precedential) ("*General Plastic*" or "*GP*").
[5] *Valve Corp. v. Elec. Scripting Prods., Inc.*, IPR2019-00062, Paper 11 (PTAB Apr. 2, 2019) (precedential) ("*Valve*").

Reply 1–3. In support, Serendia highlights Cartessa's and Jeisys's collaboration in preparing and filing a joint proposed schedule, joint expert report, and joint invalidity defenses in the ITC proceeding, as well Jeisys's reliance on the same invalidity expert as the one proffered in the ITC proceeding. *See* Prelim. Resp. 9 (citing Exs. 2004, 2012, 2016–19). Serendia also contends that "additional relevant and extenuating facts and circumstances" evidence a significant relationship because:

> (1) Cartessa and Jeisys are in the same RF micro-needling manufacturing and distribution community;
>
> (2) Jeisys had notice of potential infringement of the '774 patent before Cartessa filed the earlier petition; and
>
> (3) Jeisys engaged in "tactical delay" by having knowledge of the prior art asserted in the current petition more than seven months prior to its filing.

*See id.* at 10–11 (citing, respectively, Exs. 2020, 2021; Exs. 2022, 2023, 2052; Ex. 2053).

Jeisys disputes the existence of any significant relationship with Cartessa, arguing it "had no control over the Cartessa Aesthetics IPRs, did not participate or provide input into the Cartessa Aesthetics IPRs, and had no knowledge of them prior to their being filed," but "filed the present petition on its own behalf and not at the behest of anyone else." Pet. 74 (citing *Valve*). In support, Jeisys cites the Director's recent decisions in *Ford*[6] and *Videndum*.[7] *See* Pet. Reply 2, 4.

---

[6] *Ford Motor Co. v. Neo Wireless LLC*, IPR2023-00763, Paper 28 (Vidal Mar. 22, 2024) ("*Ford*").
[7] *Videndum Prod. Sols., Inc v. Rotolight Ltd.*, IPR2023-01218, Paper 12 (Vidal Apr. 19, 2024) ("*Videndum*").

At the outset, we note that the Director's decisions in *Ford* and *Videndum* clarified the Board's application of the *General Plastic/Valve* framework. For instance, in *Ford*, the Director explained that "[u]nder existing Office policy and precedent, the Board does not recognize a 'significant relationship' between parties [i.e., serial petitioners] having different accused products that merely engage in *court-ordered* pretrial coordination." *Ford*, at 9 (emphasis added). And, in *Videndum*, the Director further explained that where "the first and second petitioners are neither the same party, nor possess a significant relationship under *Valve*, *General Plastic* factor one necessarily outweighs the other *General Plastic* factors." *See Videndum*, Paper 12, 6–7. Thus, per *Ford* and *Videndum*, we will not discretionarily deny a later petition in view of an earlier petition where the earlier and later petitioners are neither the same party nor have a significant relationship.

After reviewing the record, we find that no significant relationship exists with Cartessa to justify application of the *General Plastic/Valve* framework. Contrary to Serendia's assertions about the joint invalidity defense of Jeisys and Cartessa in the parallel ITC proceeding (*see* Prelim. Resp. 9–10), the relevant facts and circumstances here are akin to those in *Ford*. More specifically, like the "court-ordered" coordination of the petitioners in *Ford*, the collaboration of Jeisys and Cartessa as co-respondents in the ITC proceeding was *mandated* by the rules of the ITC proceeding, and, thus, does not alone create the type of "significant relationship" contemplated by *Valve*. *See* Pet. Reply 2–3 (citing *Ford*, at 3; Exs. 1028, 1029); *see also Prime Time Toys LLC v. Spin Master, Inc.*, IPR 2023-01339, Paper 12, at 19–20 (Vidal July 9, 2024) ("*Prime Time Toys*") ("The parties' collaboration as co-respondents in the ITC investigation does

not by itself support a finding of a "significant relationship."). As such, Jeisys's knowledge of the prior art asserted in the ITC proceeding and its collaboration with Cartessa on a joint invalidity defense does not create a significant relationship where such knowledge and collaboration arises from the rules of the ITC proceeding itself.

Indeed, after seeing Jeisys's reply brief, Serendia no longer relies solely on the joint collaboration in the ITC proceeding to demonstrate a significant relationship, and, instead, argues that "[a]dditional extenuating circumstances exist here." PO Sur-Reply 1–3. But, to the extent Serendia premises the existence of extenuating circumstances on the argument that Cartessa and Jeisys "are part of the same RF microneedling manufacturing and distribution community" (Prelim. Resp. 10), we are not persuaded. At the outset, Serendia does not dispute Jeisys's assertion that Cartessa and Jeisys are direct competitors selling different products. *See* PO Sur-Reply 1–2 (acknowledging Jeisys's assertion without disputing it). Moreover, as was the case with the serial petitioners in *Ford*, there is no evidence here that Cartessa and Jeisys "had any interactions or agreements regarding the implementation of the accused [technology] into their respective accused products" that might rise to the level of "relevant or extenuating facts or circumstances" indicative of a significant relationship. *Ford*, at 10–11; *cf. Valve*, at 10 ("Valve represented that 'HTC's [accused] VIVE devices incorporate certain Valve technologies under a technology license from Valve,' and that 'Valve employees did provide HTC with technical assistance during the development of the accused VIVE devices.'"). Thus, in the absence of any proof of a license or other technology sharing agreement between Cartessa and Jeisys, we reject the notion that mere

overlap of the technologies used in their respective products somehow creates a significant relationship.

We also reject Serendia's reliance on *Mitek Sys., Inc. v. United Servs. Auto. Assoc.*, IPR2020-00882, Paper 29 at 17 (PTAB Nov. 6, 2020) ("*Mitek*"), to argue a significant relationship exists because Jeisys was "aware" of the asserted prior art and was "working hand-in-hand" with Cartessa in the ITC proceeding to develop invalidity contentions "seven months" before filing the current petition. *See* Prelim. Resp. 11–12. In *Mitek*, the finding of a significant relationship centered not merely on the fact of the petitioner's awareness of an earlier petitioner's invalidity contentions, but more critically on the existence of a "customer-supplier relationship" between the first and second petitioners that was "longstanding and deep," as evidenced by a confidential exhibit in that case. *See Mitek*, Paper 29, at 17–21 (redacting actual extent of the petitioners' relationship from public version of decision). Thus, we do not consider Jeisys's simple knowledge of Cartessa's invalidity contentions in the ITC proceeding as outweighing the lack of any evidence here of an actual joint defense (or similar) agreement between Jeisys and Cartessa.

We have reviewed Serendia's other arguments but find them unpersuasive. In sum, because Jeisys and Cartessa "are neither the same party, nor possess a significant relationship under *Valve*," the first factor of *General Plastic* necessarily outweighs the other *General Plastic* factors such that exercising our discretion to deny the petition is not justified. *Videndum*, at 6–7.

## III. ANALYSIS OF ASSERTED CHALLENGES

### *A. Level of Ordinary Skill in the Art*

Jeisys proposes, and Serendia agrees, that one of ordinary skill in the relevant art would have had

> (1) 7–10 years of experience with developing and/or using treatment systems for delivery of electromagnetic radiation energy to skin or other tissues, and (2) a related graduate engineering degree or M.D. . . . [and] may have worked as part of a multidisciplinary team and drawn upon not only his or her own skills, but also would have taken advantage of certain specialized skills of others on the team when solving a technical problem.

Pet. 14–15 (citing Ex. 1003 ¶ 48); *see also* Prelim. Resp. 33 (accepting Jeisys's definition of the level of skill in the art). For purposes of this proceeding, we adopt the parties' assessment of the level of ordinary skill in the art.

### *B. Claim Construction*

The parties dispute the construction of "desired distance" as recited in claims 13 and 14. *See* Prelim. Resp. 33–38; Pet. Reply 7–8. On the one hand, Jeisys argues that the term "simply distinguishes between needles extending or extendable a *desired distance* as opposed to an *undesired distance*." Pet. 16; *see also* Pet. Reply 7. As Jeisys explains, the "desired distance" limitation "can be met by programming the system to extend the needles to a desired distance (as opposed to being an un-programmed, undesired distance), or by using . . . non-adjustable needles of 'a particular needle length.'" *Id.* at 7–8. In support, Jeisys notes the distinction in base claim 11 between needles "*extending or extendable* a desired distance from a surface." Pet. 16 (emphasis added). Citing the parties agreed-upon construction of that phrase in the parallel ITC proceeding, Jeisys argues that

> needles '*extending*' a desired distance from a surface cover needles that are fixed and non-extendable relative to the surface as depicted, for example, in FIGS. 2A–2D of the '774 patent, and needles '*extendable*' a desired distance from a surface cover needles that are extendable relative to the surface as shown, for example, in FIGS. 9C–9D and 10D–10E of the '774 patent.

Pet. 16 (citing Ex. 1007, at 16) (emphasis added).

Serendia argues that "[t]he particular distance is 'desired' because it is the distance a user decided to 'select' to achieve a particular penetration depth," and, thus, "desired distance" means "how far the needles extend from the device's end surface, *based on a user's selection*, to penetrate the dermatological issue." Prelim. Resp. 33 (emphasis added); *see also id.* at 38 ("the 'desired distance' is based on a user's selection."). According to Serendia, the specification of the '774 patent support such a construction by describing a particular embodiment in which "needle deployment motor controller (NDMC) module 911B" controls deployment of needles 924A "based on one or more user selected operational parameters" such as "the depth and duty cycle" of the needles. *Id.* at 34–35 (citing Ex. 1001, 10:31–36, 14:14–20). Serendia also argues that the claims themselves support its construction because claims 13 and 14 depend from claim 12, which is limited to needles "*extendable* a desired distance from the end surface," and, thus, expressly excludes Jeisys's contention that the claims also encompass an embodiment having "fixed, non-extendable needles." Prelim. Resp. 37–38.

We need not formally construe the "desired distance" limitation in order to resolve whether institution is appropriate. That is because, on the current record, the asserted prior art satisfies the "desired distance" limitation regardless of which parties' proposed construction we adopt. *See*

*Realtime Data, LLC v. Iancu*, 912 F.3d 1368, 1375 (Fed. Cir. 2019) ("The Board is required to construe 'only those terms . . . that are in controversy, and only to the extent necessary to resolve the controversy.'") (quoting *Vivid Techs., Inc. v. Am. Sci. & Eng'g, Inc.*, 200 F.3d 795, 803 (Fed. Cir. 1999)). Nonetheless, the parties are free to further explore the appropriate construction of "desired distance" at trial, in particular, whether the language of the claims limits the scope of claims 13 and 14 to "extendable" needles, and whether construing the "desired distance" limitation as being based on a user's selection improperly reads a preferred embodiment into the claims.

*C. Anticipation by Mehta*

Jeisys challenges claims 13 and 14 as being anticipated by Mehta. Pet. 43. In doing so, Jeisys incorporates its showing for base claims 11 and 12, from which claims 13 and 14 depend, as well as its showing for claims 1–4, which recite limitations similar to those of claims 11–14. *See id.* at 42–43.

Serendia responds that Jeisys fails to show that Mehta discloses the claimed "desired distance" limitation, which Serendia construes to mean "how far the needles extend from the device's end surface, *based on a user's selection*, to penetrate dermatological issue." Prelim. Resp. 45–46 (emphasis added). According to Serendia, "there is no dispute that Mehta discloses a motor to drive the needles into the tissue, but what is entirely missing from Mehta is any disclosure that a user can select how far the needles extend into such tissue, as the claims require." *Id.* at 51. According to Serendia,

> Mehta instead discloses selecting cartridges having different probe lengths or angles, not selecting how far the probes in a given cartridge extend when used in Metha's [sic] system. . . . Mehta's system is designed for full insertion of the needles by

> their entire lengths—i.e., they extend a *fixed distance*. . . . Thus, in Mehta, the distance that the needles extend when using a particular cartridge is not selected by the user but rather is determined by the "fixed length" of the needles.

*Id.* at 46–47.

We disagree with Serendia's analysis of Mehta. As Jeisys correctly explains, Mehta discloses the "desired distance" limitation even assuming Serendia's construction of that limitation, i.e., that the needles are extendable to a depth *selected by the user*. *See* Pet. 26–27. Indeed, although Mehta may not use the term "desired distance" expressly, it comes about as close as one would expect from an anticipatory disclosure. For example, as Jeisys notes, Mehta discloses an embodiment that includes "depth markings" on the needles (i.e., probes) that allow the user to determine a desired depth of the needles—

> The electrodes of the probe array can also include any number of visually distinguishing features (e.g., depth markings, colors, shades, etc.) that enable a physician to observe proper placement. . . . This ensures that the probe is not driven too far into tissue. Alternatively, *the probe can be marked with one or more features that allow the physician to determine the depth of insertion of the probe.*

Ex. 1004, 13:37–45 (emphasis added).

As Jeisys also notes, Mehta discloses another embodiment, depicted in Figures 10A–F, having a graphical user interface 320 ("GUI") that displays the actual and target depths of needles so as to avoid placement of the needles in an undesired region. *See* Pet. 26 (citing Ex. 1004, 32:63–33:43; Ex. 1003 ¶ 86). As described, the GUI "can provide information for a physician (or other medical staff) to monitor various treatment parameters as well as other information regarding the placement of the array 108 or probes 104 when inserted in the tissue" and "maintain visual contact with

the treatment device and tissue being treated." Ex. 1004, 11:1–13. To do so, the GUI incorporates a "tissue characteristic indicator (whether visual, virtual, audible, or other feedback)" that allows the user to monitor the needle's actual location in the tissue and advance the needle a desired distance for providing treatment—

> FIG. 10B illustrates a tissue characteristic indicator showing a virtual depiction 350 of the depth or location of the probe array. . . . *[T]he virtual depth/location depiction 350 can illustrate an actual placement of the probe array 340.* . . . [T]he system can be configured to show (or the system can have an option to show) additional probe array information. For example, *the virtual depth/location depiction 350 can also show a desired probe location (e.g., array 342 can represent the desired depth of placement for providing a treatment).* . . . As shown by FIG. 10B, providing the virtual depth/location depiction 350 allows the physician to not only identify whether the array is located within the desired tissue layer but also allows the physician to observe the angle of the electrode array in tissue. . . . *Therefore, the physician would be informed that further advancement of the probes is necessary to place the probes within the second layer 326 (which corresponds to the dermal layer).*

*Id.* at 32:46–33:29 (emphases added); *see also id.* at 33:57–66 (further describing "virtual depth/location depiction 350").

Similarly, Mehta discloses that the needle may employ a sensor to assist the user in positioning the needle to the desired depth—

> Referring to Fig. 8A, showing a partial section of a probe 108 placed in tissue 20. . . . The probe 8 contains a sensor 110 near a distal end or on an active area 122 of the probe 108. . . .
>
> Measurement of a tissue parameter by *the sensor 110 provides information that can confirm whether the probe 108 is located in the desired target region.* For example, . . . if the measured impedance is not within a range normally associated with tissue, *the system can prevent treatment and alert the user for the need to reposition the probe 108.* Accordingly, the probe

> 108 can ultimately be repositioned as shown in FIG. 8B (or the active area 122 of the probe 108 can be repositioned).

*Id.* at 24:27–45, Figs. 8A–C (emphases added).[8]

Those disclosures by Mehta, either alone or together, would have been understood by one skilled in the art as providing the user with the means to select and control the desired depth of the needles into the tissue. *See* Ex. 1003 ¶¶ 86–98. To the extent Serendia believes otherwise, it fails to read Mehta as a whole. Instead, Serendia focuses on Mehta's so-called "cartridge" embodiment having needles of a "fixed length" (*see* Prelim. Resp. 46–47, 50) to the exclusion of Mehta's clear and unambiguous teachings of other means for selecting and controlling how far the needles are inserted into the tissue. As discussed above, those means range from the simple—such as depth markings on the needles to assist the user in determining how far to insert them into the tissue—to the more sophisticated—such as a GUI to display and control the needle's insertion into the tissue. In either case, the user selectively actuates a motor to cause insertion of the needles to the desired depth. *See, e.g.*, Ex. 1004, 10:33–39, 12:5–14, 13:54–14:4, 15:36–42, Figs. 3A, 3B; Ex. 1003 ¶¶ 84–85. Thus, based on the current record, we find that Mehta discloses the "desired distance" limitation of claims 13 and 14, even under Serendia's narrower interpretation of that limitation, and otherwise meets the respective "mechanism" and "motor" limitations of those claims for causing the needles to extend the desired distance.

Serendia does not dispute Jeisys's showing of how Mehta discloses the other claim limitations, including those of base claims 11 and 12.

---

[8] Mehta also teaches that the user can select a "desired location" by choosing the needle's insertion "angle A." Ex. 1004, 12:31–46, Figs. 2B, 7A, 7B.

*Compare* Pet. 21–26, 29–34, *with* Prelim. Resp. 45–51, PO Sur-Reply 5–9. Having reviewed the record, we find that Jeisys sufficiently shows that Mehta discloses each of those other claim limitations. *See* Pet. 42–43 (relying on showing for claims 1–4); *id.* at 20–36 (Jeisys's showing for claims 1–4). Thus, at this stage, Jeisys demonstrates a reasonable likelihood that claims 13 and 14 are anticipated by Mehta.

*D. Obviousness over Mehta and Lee*

Jeisys submits that claims 13 and 14 are also unpatentable as obvious over Mehta and Lee. *See* Pet. 64–70. This obviousness challenge is similar to Jeisys's anticipation challenge, with the exception that Jeisys alternatively relies on Lee for teaching the claimed "desired distance" limitation. *See id.* at 65 ("[S]hould Mehta be found to not disclose needles extendable a 'desired distance' based on the adoption of Patent Owner's interpretation of 'desired distance' or otherwise, claims [13 and 14] would have been obvious to a POSA under Section 103 in view of Mehta and Lee."). To that end, Jeisys notes that Lee teaches a skin regeneration apparatus having a "stepper motor" that allows for more precise control of an insertion depth of the needles into the skin and that one skilled in the art would have been led to incorporate Lee's teaching into Mehta's apparatus "so as to achieve an even more precise and flexible manner of inserting needles to a desired target depth and location." *See id.* at 67, 69 (citing Ex. 1011 ¶¶ 46, 50, 62, 69, Figs. 4a–4b; Ex. 1003 ¶¶ 235–236).

Serendia disputes Jeisys's reason to combine the teachings of Mehta and Lee. Prelim. Resp. 52–59. Serendia also presents evidence of secondary considerations, such as commercial success and industry praise of its "Sylfirm X" product, in an effort to refute Jeisys's obviousness challenge. *See id.* at 59–64.

At this preliminary stage, we are not so sure Serendia establishes a nexus between the claimed invention and the success it attributes to the Sylfirm X product. Here, Serendia acknowledges that the success of the Sylfirm X product is due only "in part" to the technology claimed in the '774 patent. Prelim. Resp. 62. Indeed, in another proceeding, Serendia contends that commercial success of the Sylfirm X product is due to the so-called "Na effect," which is not claimed in the '774 patent but instead goes to the heart of another one of Serendia's patents. *See* Pet. Reply 9 (citing IPR2024-00386, Paper 13 ("Prelim. Resp."), at 61–63). "A patent claim is not coextensive with a product that includes a 'critical' unclaimed feature that is claimed by a different patent and that materially impacts the product's functionality." *Fox Factory, Inc. v. SRAM, LLC*, 944 F.3d 1366, 1375 (Fed. Cir. 2019). Here, Serendia fails to explain the criticality of the unclaimed "Na effect" to the functionality of the Sylfirm X product. *See* PO Sur-Reply 9–10. Nor does Serendia explain sufficiently how its evidence of commercial success is the direct result of the claimed invention here, as opposed to the claimed invention at the heart of Serendia's other patent. *See Fox Factory*, 944 F.3d at 1373–74. Thus, without more from Serendia, we think analysis of this issue is best left for trial after full development of the record. And, because Jeisys's anticipation challenge satisfies the threshold for institution, we need not further address Jeisys's obviousness challenge at this time.

## IV. CONCLUSION

For the above reasons, we determine that Jeisys demonstrates a reasonable likelihood of proving that claims 13 and 14 are unpatentable as anticipated by Mehta. And because "[e]qual treatment of claims and

grounds for institution purposes has pervasive support in *SAS*," we institute on all the claims as challenged in the petition. *See* 37 C.F.R. § 42.108(a), (c); *PGS Geophysical AS v. Iancu*, 891 F.3d 1354, 1360 (Fed. Cir. 2018) (citing *SAS Inst., Inc. v. Iancu*, 138 S. Ct. 1348, 1359–60 (2018)).

## V. ORDER

Accordingly, it is:

ORDERED that an *inter partes* review of claims 13 and 14 of the '774 patent is *instituted*; and

FURTHER ORDERED that, pursuant to 35 U.S.C. § 314(c) and 37 C.F.R. § 42.4(b), notice is hereby given of the institution of trial, which will commence on the entry date of this Decision.

FOR PETITIONER:

Wesley O. Mueller
Leonard Z. Hua
Paul J. Filbin
Brent A. Chatham
Scott Weidenfeller
Anupam Sharma
Peter Chen
Wonseon Choi
LEYDIG, VOIT & MAYER, LTD.
wmueller@leydig.com
lhua@leydig.com
pfilbin@leydig.com
bchatham@leydig.com
sweidenfeller@cov.com
asharma@cov.com
pchen@cov.com
wchoi@steptoe.com

FOR PATENT OWNER:

Charles H. Sanders
Steven W. Peters
LATHAM & WATKINS LLP
charles.sanders@lw.com
steven.peters@lw.com

Trials@uspto.gov
571-272-7822

Paper 5

UNITED STATES PATENT AND TRADEMARK OFFICE

---

BEFORE THE PATENT TRIAL AND APPEAL BOARD

---

ENDYMED MEDICAL LTD. and ENDYMED MEDICAL, INC.,
Petitioner,

v.

SERENDIA, LLC,
Patent Owner.

---

IPR2024-00843
Patent 9,775,774 B2

---

Mailed: August 15, 2024

Before CARLA D. CHRISP, *Trial Paralegal*

NOTICE OF FILING DATE ACCORDED TO PETITION
AND
TIME FOR FILING PATENT OWNER PRELIMINARY RESPONSE

The petition for *inter partes* review filed in the above proceeding has been accorded the filing date of August 1, 2024.

Patent Owner may file a preliminary response to the petition no later than three months from the date of this notice. The preliminary response is limited to setting forth the reasons why the requested review should not be instituted. Patent Owner may also file an election to waive the preliminary

response to expedite the proceeding. For more information, please consult the Office Patent Trial Practice Guide, 77 Fed. Reg. 48756 (Aug. 14, 2012), which is available on the Board Web site at http://www.uspto.gov/PTAB.

Patent Owner is advised of the requirement to submit mandatory notice information under 37 C.F.R. § 42.8(a)(2) within 21 days of service of the petition. Mandatory notices include identifying any other judicial or administrative matter that would affect, or be affected by, a decision in the proceeding. 37 C.F.R. § 42.8(b)(2). Such administrative matters include requests for certificates of correction.

The parties are encouraged to use the heading on the first page of this Notice for all future filings in the proceeding.

The parties are advised that under 37 C.F.R. § 42.10(c), recognition of counsel *pro hac vice* requires a showing of good cause. The parties are authorized to file motions for *pro hac vice* admission under 37 C.F.R. § 42.10(c). Such motions shall be filed in accordance with the "Order -- Authorizing Motion *for Pro Hac Vice* Admission" in Case IPR2013-00639, Paper 7, a copy of which is available on the Board Web site under "Representative Orders, Decisions, and Notices."

The parties are reminded that unless otherwise permitted by 37 C.F.R. § 42.6(b)(2), all filings in this proceeding must be made electronically in the Patent Trial Appeal Case Tracking System (P-TACTS), accessible from the Board Web site at http://www.uspto.gov/PTAB. To file documents, users must first obtain a user ID by registering with MyUSPTO. Information regarding how to register with MyUSPTO and use P-TACTS is available at

the Board Web site at https://www.uspto.gov/patents/ptab/patent-trial-and-appeal-case-tracking-system-p-tacts.

The parties may request a conference call as needed. Any email requesting a conference call with the Board should: (a) copy all parties, (b) indicate generally the relief being requested or the subject matter of the conference call, (c) include multiple times when all parties are available, (d) state whether the opposing party opposes any relief requested, and (e) if opposed, either certify that the parties have met and conferred telephonically or in person in an attempt to reach agreement, or explain why such meet and confer did not occur. The email may not contain substantive argument and, unless otherwise authorized, may not include attachments. *See* Trial Practice Guide at 9–10. If practicable, in order to ensure emails are consistent with the above, the parties should send a single, joint email that includes items (a)–(e).

If there are any questions pertaining to this notice, please contact the Patent Trial and Appeal Board at trials@uspto.gov or 571-272-7822.

IPR2024-00843
Patent 9,775,774 B2

PETITIONER:

Guy Yonay
Zeev Pearl
Kyle Auteri
Milo Eadan
PEARL COHEN ZEDEK LATZER BARATZ LLP
gyonay@pearlcohen.com
zpearl@pearlcohen.com
kauteri@pearlcohen.com
meadan@pearlcohen.com
endymed@pearlcohen.com

PATENT OWNER:

DANIELSON LEGAL LLC
ATTN: PATENT ADMINISTRATOR
1531 32ND AVE S, STE 102
FARGO, ND 58103-5911

## NOTICE CONCERNING ALTERNATIVE DISPUTE RESOLUTION (ADR)

The Patent Trial and Appeal Board (PTAB) strongly encourages parties who are considering settlement to consider alternative dispute resolution as a means of settling the issues that may be raised in an AIA trial proceeding. Many AIA trials are settled prior to a Final Written Decision. Those considering settlement may wish to consider alternative dispute resolution techniques early in a proceeding to produce a quicker, mutually agreeable resolution of a dispute or to at least narrow the scope of matters in dispute. Alternative dispute resolution has the potential to save parties time and money.

Many non-profit organizations, both inside and outside the intellectual property field, offer alternative dispute resolution services. Listed below are the names and addresses of several such organizations. The listings are provided for the convenience of parties involved in cases before the PTAB; the PTAB does not sponsor or endorse any particular organization's alternative dispute resolution services. In addition, consideration may be given to utilizing independent alternative dispute resolution firms. Such firms may be located through a standard keyword Internet search.

| CPR INSTITUTE FOR DISPUTE RESOLUTION | AMERICAN INTELLECTUAL PROPERTY LAW ASSOCIATION (AIPLA) | AMERICAN ARBITRATION ASSOCIATION (AAA) | WORLD INTELLECTUAL PROPERTY ORGANIZATION (WIPO) | AMERICAN BAR ASSOCIATION (ABA) |
|---|---|---|---|---|
| Telephone: (212) 949-6490 | Telephone: (703) 415-0780 | Telephone: (212) 484-3266 | Telephone: 41 22 338 9111 | Telephone : (202) 662-1000 |
| Fax: (212) 949-8859 | Fax: (703) 415-0786 | Fax: (212) 307-4387 | Fax: 41 22 733 5428 | N/A |
| 575 Lexington Ave | 241 18th Street, South, Suite 700 | 140 West 51st Street | 34, chemin des Colombettes | 1050 Connecticut Ave, NW |
| New York, NY 10022 | Arlington, VA 22202 | New York, NY 10020 | CH-1211 Geneva 20, Switzerland | Washington D.C. 20036 |
| www.cpradr.org | www.aipla.org | www.adr.org | www.wipo.int | www.americanbar.org |

If parties to an AIA trial proceeding consider using alternative dispute resolution, the PTAB would like to know whether the parties ultimately decided to engage in alternative dispute resolution and the reasons why or why not. If the parties actually engage in alternative dispute resolution, the

PTAB would be interested to learn what mechanism (e.g., arbitration, mediation, etc.) was used and the general result. Such a statement from the parties is not required but would be helpful to the PTAB in assessing the value of alternative dispute resolution to parties involved in AIA trial proceedings. To report an experience with ADR, please forward a summary of the particulars to the following email address: PTAB_ADR_Comments@uspto.gov

# Patent Trial and Appeal Board

A petition has been filed in Patent Number 9,775,774, Application Number 15/096,686 on August 1, 2024.

The AIA Review Number is IPR2024-00843.

To view the documents filed in this petition, go to https://ptab.uspto.gov and Search for the AIA Review Number.

- Enter your search criteria on the "Search PTAB" page
- Type in the AIA Review Number or Patent Number
- You will need to answer the CAPTCHA to prove that you are not a robot.
- Click on the "Search" button
- The search results will appear identifying the AIA Review Number
- Click on the "View Documents" button
- A pop up window will appear with a list of documents
- Click on the "Download" button to download the document.

Questions regarding this notice should be directed to the Patent Trial and Appeal Board at 571-272-7822.

UNITED STATES
PATENT AND TRADEMARK OFFICE

P.O. Box 1450
Alexandria, Virginia 22313-1450
www.uspto.gov

# ACKNOWLEDGEMENT OF LOSS OF ENTITLEMENT TO ENTITY STATUS DISCOUNT

| APPLICATION # | FILING OR 371(C) DATE | FIRST NAMED APPLICANT | ATTORNEY DOCKET # | REQUEST ID |
|---|---|---|---|---|
| 15/096,686 | 04/12/2016 | Jongju Na | YS-0073-SR-SE | 364098 |

The entity status change request below filed through Patent Center on 03/03/2025 has been accepted.

## Certifications

APPLICANT CHANGING TO REGULAR UNDISCOUNTED FEE STATUS

## Signature

I certify, in accordance with 37 CFR 1.4(d)(4), that I am one of the signatories making the entity status change.

| Signature | Name | Registration # |
|---|---|---|
| /Robert Blasi/ | Robert Blasi | 50389 |

Trials@uspto.gov
571-272-7822

Paper 51
Date: July 14, 2025

UNITED STATES PATENT AND TRADEMARK OFFICE

---

BEFORE THE PATENT TRIAL AND APPEAL BOARD

---

ENDYMED MEDICAL LTD. and ENDYMED MEDICAL, INC.,
Petitioner,

v.

SERENDIA, LLC,
Patent Owner.

---

IPR2024-00383 (Patent 9,775,774 B2)
IPR2024-00384 (Patent 9,320,536 B2)
IPR2024-00463 (Patent 10,869,812 B2)[1]

---

Before SHERIDAN K. SNEDDEN, CARL M. DEFRANCO, and RYAN H. FLAX, *Administrative Patent Judges.*

DEFRANCO, *Administrative Patent Judge.*

TERMINATION
Due to Settlement After Institution
*35 U.S.C. § 317; 37 C.F.R. § 42.74*

---

[1] This is a consolidated Decision for all three proceedings. EndyMed Medical Ltd. and EndyMed Medical, Inc. were joined as petitioners to these proceedings. *See* Paper 34. The original petitioners, Ilooda Co., Ltd. and Jeisys Medical Inc., are no longer parties. *See* Papers 14, 35.

With our authorization, Petitioner EndyMed Medical Ltd. and EndyMed Medical, Inc. and Patent Owner Serendia, LLC (collectively, "the parties") filed a joint motion to terminate each of the above-identified *inter partes* review proceedings due to settlement. *See* Paper 48 ("Mot.").[2] Along with the joint motion, the parties filed a copy of their settlement agreement, which they request be treated as business confidential information pursuant to 35 U.S.C. § 317(b) and 37 C.F.R. 42.74(c). *See id.* at 1 (citing Ex. 2161). The parties represent that the settlement agreement, as filed, is a true and complete copy.[3] *See id.* The parties further represent that the settlement agreement resolves "all disputes" regarding the challenged patents and, thus, request that the above-identified proceedings be terminated. *Id.* at 2–3.

In the case of settlement, an instituted proceeding "shall be terminated with respect to any petitioner upon the joint request of the petitioner and the patent owner, unless the Office has decided the merits of the proceeding before the request for termination is filed." 35 U.S.C. § 317(a). Also, an instituted proceeding will be terminated due to settlement only "[i]f no petitioner remains in the inter partes review." *Id.* Here, we are still months away from a final decision on the merits, and no petitioner would remain upon termination of these proceedings. Thus, in light of the parties'

---

[2] For convenience, we cite only to papers and exhibits in IPR2024-00383, but substantially identical papers and exhibits are part of the record in each of the other two proceedings.

[3] The settlement agreement indicates that it constitutes "the entire agreement" between the parties. Ex. 2161, at 8.

settlement agreement, we deem it appropriate to grant the request for termination.

The parties also request that their settlement agreement (Exhibit 2161) be treated as business confidential information and be kept separate from the files of the challenged patents. *See* Paper 49. After reviewing the settlement agreement, we agree that it appears to contain confidential business information. As such, we determine it is appropriate to treat the settlement agreement as business confidential information and keep it separate from the files of the challenged patents. *See* 35 U.S.C. § 317(b); 37 C.F.R. § 42.74.

Accordingly, it is:

ORDERED that the joint motion to terminate in each of the above-identified proceedings (IPR2024-00383, Paper 48; IPR2024-00384, Paper 48; and IPR2024-00463, Paper 50) is *granted*;

FURTHER ORDERED that the joint request to treat the settlement agreement (Ex. 2161) as business confidential information in each of the above identified-proceedings (IPR2024-00383, Paper 49; IPR2024-00384, Paper 49; and IPR2024-00463, Paper 51) is *granted*;

FURTHER ORDERED that the settlement agreement (Ex. 2161) in the above-identified proceedings shall be treated as business confidential information, kept separate from the files of the above-identified patents, and made available only to federal government agencies on written request, or to any person on a showing of good cause, pursuant to 35 U.S.C. § 317(b) and 37 C.F.R. § 42.74(c); and

FURTHER ORDERED that each of the above-identified proceedings is terminated.

IPR2024-00383 (Patent 9,775,774 B2)
IPR2024-00384 (Patent 9,320,536 B2)
IPR2024-00463 (Patent 10,869,812 B2)

IPR2024-00383 (Patent 9,775,774 B2)
IPR2024-00384 (Patent 9,320,536 B2)
IPR2024-00463 (Patent 10,869,812 B2)

FOR PETITIONER:

Wesley Mueller
Leonard Hua
Paul Filbin
Brent Chatham
LEYDIG, VOIT & MAYER, LTD.
wmueller@leydig.com
lhua@leydig.com
pfilbin@leydig.com
bchatham@leydig.com

Scott Weidenfeller
Anupam Sharma
Peter Chen
Wonseon Choi
COVINGTON & BURLING LLP
sweidenfeller@cov.com
asharma@cov.com
pchen@cov.com
wchoi@steptoe.com

Guy Yonay
Zeev Pearl
Kyle Auteri
Milo Eadan
PEARL COHEN ZEDEK LATZER BARATZ LLP
gyonay@pearlcohen.com
zpearl@pearlcohen.com
kauteri@pearlcohen.com
meadan@pearlcohen.com

IPR2024-00383 (Patent 9,775,774 B2)
IPR2024-00384 (Patent 9,320,536 B2)
IPR2024-00463 (Patent 10,869,812 B2)

FOR PATENT OWNER:

Charles H. Sanders
Cecilia Peniza
Steven W. Peters
LATHAM & WATKINS LLP
charles.sanders@lw.com
cecilia.peniza@lw.com
steven.peters@lw.com

Trials@uspto.gov
571-272-7822

Paper 51
Date: July 14, 2025

UNITED STATES PATENT AND TRADEMARK OFFICE

---

BEFORE THE PATENT TRIAL AND APPEAL BOARD

---

ENDYMED MEDICAL LTD. and ENDYMED MEDICAL, INC.,
Petitioner,

v.

SERENDIA, LLC,
Patent Owner.

---

IPR2024-00383 (Patent 9,775,774 B2)
IPR2024-00384 (Patent 9,320,536 B2)
IPR2024-00463 (Patent 10,869,812 B2)[1]

---

Before SHERIDAN K. SNEDDEN, CARL M. DEFRANCO, and RYAN H. FLAX, *Administrative Patent Judges.*

DEFRANCO, *Administrative Patent Judge.*

TERMINATION
Due to Settlement After Institution
*35 U.S.C. § 317; 37 C.F.R. § 42.74*

---

[1] This is a consolidated Decision for all three proceedings. EndyMed Medical Ltd. and EndyMed Medical, Inc. were joined as petitioners to these proceedings. *See* Paper 34. The original petitioners, Ilooda Co., Ltd. and Jeisys Medical Inc., are no longer parties. *See* Papers 14, 35.

With our authorization, Petitioner EndyMed Medical Ltd. and EndyMed Medical, Inc. and Patent Owner Serendia, LLC (collectively, "the parties") filed a joint motion to terminate each of the above-identified *inter partes* review proceedings due to settlement. *See* Paper 48 ("Mot.").[2] Along with the joint motion, the parties filed a copy of their settlement agreement, which they request be treated as business confidential information pursuant to 35 U.S.C. § 317(b) and 37 C.F.R. 42.74(c). *See id.* at 1 (citing Ex. 2161). The parties represent that the settlement agreement, as filed, is a true and complete copy.[3] *See id.* The parties further represent that the settlement agreement resolves "all disputes" regarding the challenged patents and, thus, request that the above-identified proceedings be terminated. *Id.* at 2–3.

In the case of settlement, an instituted proceeding "shall be terminated with respect to any petitioner upon the joint request of the petitioner and the patent owner, unless the Office has decided the merits of the proceeding before the request for termination is filed." 35 U.S.C. § 317(a). Also, an instituted proceeding will be terminated due to settlement only "[i]f no petitioner remains in the inter partes review." *Id.* Here, we are still months away from a final decision on the merits, and no petitioner would remain upon termination of these proceedings. Thus, in light of the parties'

---

[2] For convenience, we cite only to papers and exhibits in IPR2024-00383, but substantially identical papers and exhibits are part of the record in each of the other two proceedings.

[3] The settlement agreement indicates that it constitutes "the entire agreement" between the parties. Ex. 2161, at 8.

settlement agreement, we deem it appropriate to grant the request for termination.

The parties also request that their settlement agreement (Exhibit 2161) be treated as business confidential information and be kept separate from the files of the challenged patents. *See* Paper 49. After reviewing the settlement agreement, we agree that it appears to contain confidential business information. As such, we determine it is appropriate to treat the settlement agreement as business confidential information and keep it separate from the files of the challenged patents. *See* 35 U.S.C. § 317(b); 37 C.F.R. § 42.74.

Accordingly, it is:

ORDERED that the joint motion to terminate in each of the above-identified proceedings (IPR2024-00383, Paper 48; IPR2024-00384, Paper 48; and IPR2024-00463, Paper 50) is *granted*;

FURTHER ORDERED that the joint request to treat the settlement agreement (Ex. 2161) as business confidential information in each of the above identified-proceedings (IPR2024-00383, Paper 49; IPR2024-00384, Paper 49; and IPR2024-00463, Paper 51) is *granted*;

FURTHER ORDERED that the settlement agreement (Ex. 2161) in the above-identified proceedings shall be treated as business confidential information, kept separate from the files of the above-identified patents, and made available only to federal government agencies on written request, or to any person on a showing of good cause, pursuant to 35 U.S.C. § 317(b) and 37 C.F.R. § 42.74(c); and

FURTHER ORDERED that each of the above-identified proceedings is terminated.

IPR2024-00383 (Patent 9,775,774 B2)
IPR2024-00384 (Patent 9,320,536 B2)
IPR2024-00463 (Patent 10,869,812 B2)

IPR2024-00383 (Patent 9,775,774 B2)
IPR2024-00384 (Patent 9,320,536 B2)
IPR2024-00463 (Patent 10,869,812 B2)

FOR PETITIONER:

Wesley Mueller
Leonard Hua
Paul Filbin
Brent Chatham
LEYDIG, VOIT & MAYER, LTD.
wmueller@leydig.com
lhua@leydig.com
pfilbin@leydig.com
bchatham@leydig.com

Scott Weidenfeller
Anupam Sharma
Peter Chen
Wonseon Choi
COVINGTON & BURLING LLP
sweidenfeller@cov.com
asharma@cov.com
pchen@cov.com
wchoi@steptoe.com

Guy Yonay
Zeev Pearl
Kyle Auteri
Milo Eadan
PEARL COHEN ZEDEK LATZER BARATZ LLP
gyonay@pearlcohen.com
zpearl@pearlcohen.com
kauteri@pearlcohen.com
meadan@pearlcohen.com

IPR2024-00383 (Patent 9,775,774 B2)
IPR2024-00384 (Patent 9,320,536 B2)
IPR2024-00463 (Patent 10,869,812 B2)

FOR PATENT OWNER:

Charles H. Sanders
Cecilia Peniza
Steven W. Peters
LATHAM & WATKINS LLP
charles.sanders@lw.com
cecilia.peniza@lw.com
steven.peters@lw.com

## Disclaimer

**9,775,774 B2 -** Jongju Na, Songpa-Gu (KR). METHOD, SYSTEM, AND APPARATUS FOR DERMATOLOGICAL TREATMENT. Patent dated October 3, 2017. Disclaimer filed April 19, 2024, by the assignee, Jongju Na.

I hereby disclaim the following complete Claims 1-12 and 15-20 of said patent.

*(Official Gazette, June 3, 2025)*

## Disclaimer

**9,775,774 B2 -** Jongju Na, Songpa-Gu (KR). METHOD, SYSTEM, AND APPARATUS FOR DERMATOLOGICAL TREATMENT. Patent dated October 3, 2017. Disclaimer filed April 19, 2024, by the inventor, Jongju Na.

I hereby disclaim the following complete Claims 1-12 and 15-20 of said patent.

*(Official Gazette, April 1, 2025)*

## Disclaimer

**9,775,774 B2 -** Jongju Na, Songpa-Gu (KR). METHOD, SYSTEM, AND APPARATUS FOR DERMATOLOGICAL TREATMENT. Patent dated October 3, 2017. Disclaimer filed April 19, 2024, by the assignee, Jongju Na.

I hereby disclaim the following complete Claims 1-12 and 15-20 of said patent.

*(Official Gazette, May 6, 2025)*

## Disclaimer

**9,775,774 B2 -** Jongju Na, Songpa-Gu (KR). METHOD, SYSTEM, AND APPARATUS FOR DERMATOLOGICAL TREATMENT. Patent dated October 3, 2017. Disclaimer filed April 19, 2024, by the inventor.

I hereby disclaim the following complete Claims 1-12 and 15-20 of said patent.

*(Official Gazette, December 10, 2024)*

## Disclaimer

**9,775,774 B2 -** Jongju Na, Songpa-Gu (KR). METHOD, SYSTEM, AND APPARATUS FOR DERMATOLOGICAL TREATMENT. Patent dated October 3, 2017. Disclaimer filed April 19, 2024, by the inventor.

I hereby disclaim the following complete Claims 1-12 and 15-20 of said patent.

*(Official Gazette, July 2, 2024)*

## Disclaimer

**9,775,774 B2 -** Jongju Na, Songpa-Gu (KR). METHOD, SYSTEM, AND APPARATUS FOR DERMATOLOGICAL TREATMENT. Patent dated October 3, 2017. Disclaimer filed April 19, 2024, by the inventor.

I hereby disclaim the following complete Claims 1-12 and 15-20 of said patent.

*(Official Gazette, September 17, 2024)*

## Disclaimer

**9,775,774 B2 -** Jongju Na, Songpa-Gu (KR). METHOD, SYSTEM, AND APPARATUS FOR DERMATOLOGIAL TREATMENT. Patent dated October 3, 2017. Disclaimer filed April 19, 2024, by the inventor, Jongju Na.

I hereby disclaim the following complete Claims 1-12 and 15-20 of said patent.

*(Official Gazette, August 5, 2025)*